Operator Manual

Portable Rotary Screw Compressor

MOBILAIR M27

No.: 9_9547 25 USE

⚠ WARNING

Breathing diesel engine exhaust exposes you to chemicals known to the State of California to cause cancer and birth defects or other reproductive harm.

> Always start and operate the engine in a well-ventilated area.

> If in an enclosed area, vent the exhaust to the outside.

> Do not modify or tamper with the exhaust system.

> Do not idle the engine except as necessary.

For more information go to www.P65warnings.ca.gov/diesel.

Manufacturer:

KAESER KOMPRESSOREN SE

96410 Coburg • PO Box 2143 • GERMANY • Tel. +49-(0)9561-6400 • Fax +49-(0)9561-640130

www.kaeser.com

Original instructions
/KKW/M27 2.25 en Z1 SBA-MOBILAIR

20230322 144143

KAESER KOMPRESSOREN

Contents

1 Regarding this Document
- 1.1 Using this document 1
- 1.2 Further documents 1
- 1.3 Copyright 1
- 1.4 Symbols and labels 1
  - 1.4.1 Warnings 1
  - 1.4.2 Potential damage warnings 2
  - 1.4.3 Other alert notes and their symbols 2

2 Technical Data
- 2.1 Nameplate 4
- 2.2 Vehicle identification number 4
- 2.3 Options overview 4
  - 2.3.1 Air Treatment 5
  - 2.3.2 Tool lubricator 5
  - 2.3.3 Compressed air distributor 5
  - 2.3.4 Proportional controller 6
  - 2.3.5 Non-return function 6
  - 2.3.6 Low temperature equipment 6
  - 2.3.7 Equipment for fire hazard areas 6
  - 2.3.8 Fuel de-watering filter 7
  - 2.3.9 Battery isolating switch 7
  - 2.3.10 Generator 7
  - 2.3.11 Chassis 7
  - 2.3.12 Lighting 8
  - 2.3.13 Frame design for stationary machines 8
  - 2.3.14 Closed floor pan 9
  - 2.3.15 Hose reels 9
  - 2.3.16 Anti-theft device 9
- 2.4 Machine (without options) 9
  - 2.4.1 Sound pressure level 9
  - 2.4.2 Tightening torque 9
  - 2.4.3 Ambient conditions 10
  - 2.4.4 Additional specifications 10
- 2.5 Chassis 11
  - 2.5.1 Chassis options 11
- 2.6 Machines with stationary frame design 11
  - 2.6.1 Weight of machines with stationary frame design 11
- 2.7 Compressor 11
  - 2.7.1 Working pressure and FAD 11
  - 2.7.2 Compressed air outlet 12
  - 2.7.3 Air quality at the compressed air outlets 12
  - 2.7.4 Safety valves 12
  - 2.7.5 Select temperature 13
  - 2.7.6 Cooling oil recommendation 13
  - 2.7.7 Cooling oil charge 15
- 2.8 Engine 15
  - 2.8.1 Engine specification 15
  - 2.8.2 Oil recommendation 15
  - 2.8.3 Fuel recommendation 16
  - 2.8.4 Engine coolant recommendation 16
  - 2.8.5 Fluid volumes 17
  - 2.8.6 Batteries 18
- 2.9 Options 18
  - 2.9.1 Tool lubricator 18

2.9.2 Low temperature equipment 18
2.9.3 Generator 19
2.9.4 Air hose with hose reel 23

3 Safety and Responsibility
3.1 Basic instructions 24
3.2 Specified use 24
3.3 Incorrect Use 24
3.4 User's responsibilities 24
3.4.1 Observe statutory and universally accepted regulations 24
3.4.2 Determining personnel 25
3.4.3 Complying with inspection schedules and accident prevention regulations 26
3.5 Dangers 26
3.5.1 Safely dealing with sources of danger 26
3.5.2 Safe machine operation 29
3.5.3 Organizational Measures 33
3.5.4 Danger areas 33
3.6 Safety devices 33
3.7 Safety signs 33
3.8 Noise control requirements 36
3.9 Generator operation 37
3.9.1 Comply with the protective measures against dangerous electric current 37
3.9.2 Instructions for safe generator operation 37
3.9.3 Connecting extension cables 38
3.9.4 Do not exceed the maximum supply system load 38
3.9.5 Perform regular generator inspections 38
3.10 Emergency situations 39
3.10.1 Correct fire fighting 39
3.10.2 Injury from handling operating fluids/materials 39
3.11 Warranty 40
3.11.1 Noise emissions warranty 40
3.12 Environmental protection 40

4 Design and Function
4.1 Bodywork 42
4.2 Component identification 43
4.3 Machine function 44
4.4 Operating modes and control mode 45
4.4.1 Machine operating modes 45
4.4.2 MODULATING control 45
4.5 Safety devices 46
4.5.1 Monitoring functions with shutdown 46
4.5.2 Further safety devices 46
4.6 Options 46
4.6.1 Manually setting the output pressure 46
4.6.2 Air treatment options 47
4.6.3 Generator option 48
4.6.4 Low temperature equipment 50
4.6.5 Options for operating in fire hazard areas 52
4.6.6 Fuel de-watering filter option 53
4.6.7 Sealed floor pan option 53
4.6.8 Battery isolating switch option 53
4.6.9 Hose reel option 54
4.6.10 Anti-theft device option 54
4.7 Frame design options for stationary machines 55

4.7.1 Chassis types of stationary machines 55
4.8 Special version 55
4.8.1 Additional filtering of low-quality fuel 55

5 Installation and Operating Conditions
5.1 Ensuring safety 56
5.2 Installation conditions 56
5.3 Requirements for positioning on a lorry platform 58

6 Installation
6.1 Ensuring safety 59
6.2 Reporting Transport Damage 59
6.3 Installing the options 59
6.3.1 Perform regular maintenance on the chassis: 59
6.3.2 Fastening a stationary machine 59

7 Initial Start-up
7.1 Ensuring safety 61
7.2 Before initial start-up (or recommissioning) 61
7.2.1 Instructions to be observed before commissioning or recommissioning 61
7.2.2 Special measures for recommissioning following storage or decommissioning . 62
7.3 Checking installation and operating conditions 63
7.4 Low-temperature operation 63
7.4.1 Carrying out warming-up when temperatures are low 64
7.4.2 Starting assistance 64
7.4.3 Starting up low-temperature equipment 66
7.5 Activating the generator 68
7.5.1 Generator control box 400V with insulation monitoring 68
7.5.2 Generator control box 115V with insulation monitoring 68
7.5.3 Testing the insulation monitor 69

8 Operation
8.1 Ensuring safety 70
8.2 Starting up and shutting down 71
8.2.1 Commissioning the machine 71
8.2.2 Starting the machine 72
8.2.3 Running the machine up to operating temperature 72
8.2.4 Setting the discharge pressure by using the proportional controller 73
8.2.5 Operating the machine under load 74
8.2.6 Shutting down the machine 74
8.3 Refuelling the machine 74
8.3.1 Using the correct type of fuel 74
8.3.2 Filling the fuel tank at a pump by means of a refuelling nozzle 76
8.3.3 Filling the fuel tank on a construction site by means of a canister 77
8.4 Cleaning the machine after operation 78
8.4.1 Cleaning the exterior of the machine 78
8.4.2 Cleaning the interior of the machine 80
8.5 Operating the options 81
8.5.1 Operating the battery isolating switch 81
8.5.2 Operating the tool lubricator 82
8.5.3 Using the low-temperature equipment 83
8.5.4 Generator operation 85
8.5.5 Using the hose reel 87

9 Fault Recognition and Rectification
9.1 Basic instructions 89
9.2 Evaluating engine faults and alarms 89

9.2.1 Engine stops or fails to start 89
9.2.2 Engine does not reach full speed 90
9.2.3 Indicator lamp remains on 90
9.2.4 Engine knocking or fails to start 91
9.3 Compressor faults and alarms 91
9.3.1 Working pressure too high 91
9.3.2 Working pressure too low 91
9.3.3 Safety relief valve blows off 92
9.3.4 Machine overheating 92
9.3.5 Too much oil residue in the compressed air 93
9.3.6 Oil flows from the compressor air filter after shutdown 93
9.3.7 High moisture content in the compressed air 94
9.4 Generator faults and alarms 94
9.4.1 No voltage or too low a voltage from the generator 94
9.4.2 Generator voltage too high 94

10 Maintenance
10.1 Ensuring safety 96
10.2 Following the maintenance plans 98
10.2.1 Logging maintenance work 98
10.2.2 Maintenance tasks after commissioning 98
10.2.3 Regular maintenance tasks 98
10.3 Drive engine maintenance 104
10.3.1 Coolant cooler maintenance 104
10.3.2 Engine air filter maintenance 109
10.3.3 Fuel system maintenance 111
10.3.4 Changing the engine oil 117
10.3.5 Changing the engine oil filter 120
10.3.6 Drive belt maintenance 121
10.3.7 Having the anti-vibration mount checked 123
10.3.8 Battery maintenance 123
10.3.9 Checking the fastening of the fuel tank 126
10.4 Compressor Maintenance 127
10.4.1 Checking cooling oil level 127
10.4.2 Filling or topping off the cooling oil 128
10.4.3 Changing the cooling oil 129
10.4.4 Replacing the compressor oil filter 133
10.4.5 Oil separator tank dirt trap maintenance 134
10.4.6 Changing the oil separator cartridge 136
10.4.7 Compressor air filter maintenance 138
10.4.8 Checking safety relief valves 140
10.5 Cooler maintenance 141
10.5.1 Cleaning the oil cooler and coolant cooler 141
10.6 Checking the screw connections 143
10.6.1 General guideline values for tightening torques 143
10.6.2 Specific guideline values for tightening torques 144
10.6.3 Sealed screw connections 144
10.7 Check sound insulation material 144
10.8 Checking the enclosure 145
10.8.1 Maintain rubber sealing strips. 145
10.8.2 Checking function of closed enclosure 146
10.8.3 Checking connecting elements of enclosure 146
10.9 Check/replace hose lines 147
10.9.1 Replace the fuel lines of the drive engine 147
10.9.2 Replace the pressure hoses of the engine 147

10.9.3 Replace the pressure hoses of the compressor ... 147
10.10 Maintenance for Optional Items ... 147
10.10.1 Tool lubricator maintenance ... 148
10.10.2 Compressed air aftercooler maintenance ... 149
10.10.3 Compressed air water separator maintenance ... 151
10.10.4 Combination filter maintenance ... 153
10.10.5 Defroster maintenance ... 157
10.10.6 Engine air intake shut-off valve maintenance ... 159
10.10.7 Draining liquid accumulation within the machine ... 160
10.10.8 Generator drive belt maintenance ... 161
10.11 Special version maintenance ... 163
10.11.1 Maintenance schedule for special version ... 163
10.11.2 Maintainance of special fuel system version ... 164
10.12 Documenting maintenance and service work ... 169

11 Spares, Operating Materials, Service
11.1 Note the nameplate ... 170
11.2 Ordering consumable parts and operating fluids/materials ... 170
11.3 KAESER AIR SERVICE ... 171
11.4 Replacement parts for service and repair ... 171
11.4.1 Spare parts overview ... 171

12 Decommissioning, Storage and Transport
12.1 Decommissioning ... 220
12.1.1 Temporary decommissioning ... 220
12.1.2 Long-term decommissioning/storage ... 221
12.2 Transportation ... 222
12.2.1 Safety ... 222
12.2.2 Transporting the machine by crane ... 223
12.2.3 Transporting the machine by forklift ... 226
12.2.4 Transporting as load ... 230
12.3 Storage ... 233
12.4 Disposal ... 233
12.4.1 Removing the batteries ... 233
12.4.2 Draining operating fluids ... 234
12.4.3 Draining condensate ... 235
12.4.4 Removing filters/filter elements ... 235
12.4.5 Disposing of the machine ... 236

13 Annex
13.1 Identification ... 237
13.1.1 Identification of the machine ... 237
13.1.2 Identification of the drive engine ... 237
13.2 Pipeline and instrument flow diagram (P+I diagram) ... 237
13.3 Dimensional drawings ... 242
13.3.1 Dimensional drawing – chassis ... 242
13.3.2 Dimensional drawing – chassis ... 244
13.3.3 Dimensional drawing – chassis ... 246
13.3.4 Dimensional drawing – Chassis ... 248
13.3.5 Dimensional drawing – chassis ... 250
13.3.6 Dimensional drawing – chassis ... 252
13.3.7 Dimensional drawing, stationary machine (skids) ... 254
13.3.8 Dimensional drawing, stationary version (frame) ... 256
13.4 Wiring diagrams ... 258
13.4.1 Electrical Diagram ... 258
13.4.2 Generator electrical diagram, 400V, 3-ph ... 268

Contents

13.4.3 Generator electrical diagram, 115 V, 2-ph 274
13.4.4 Lighting and signaling system connection 279
13.4.5 Lighting and signaling system connection 284
13.5 Fuel circulation diagram 289
13.6 Special version fuel circuit 292
13.7 Maintenance tasks for the generator 295
13.8 Operating instructions for compressed air filter (combination filter) 295

List of Illustrations

Fig. 1 Option label MOBILAIR M27 with options 5
Fig. 2 Location of safety signs 34
Fig. 3 Bodywork 42
Fig. 4 Side view (enclosure removed) 43
Fig. 5 Machine overview 44
Fig. 6 Compressed air options 47
Fig. 7 Tool lubricator 48
Fig. 8 Instrument panel, generator control box 400 V/3~/N/PE, 50 Hz 50
Fig. 9 Instrument panel, generator control box 115 V/1~/N/PE, 50 Hz, 32 A 50
Fig. 10 Device connection on the machine 51
Fig. 11 Position of the defroster shut-off valve 52
Fig. 12 Battery isolating switch 54
Fig. 13 Container for safety chain 54
Fig. 14 Fuel filtration 55
Fig. 15 Minimum distance from excavations, slopes, or walls 57
Fig. 16 Fitting the Mounting Pads 60
Fig. 17 Jumper cable connection diagram 64
Fig. 18 Coolant pre-heating 66
Fig. 19 Shut-off valve of switching position 67
Fig. 20 Insulation monitoring – 400V, 3-phase generator 68
Fig. 21 Insulation monitoring - 115V, single-phase generator 68
Fig. 22 Starting instruments 71
Fig. 23 Warm-up period label for ambient temperatures below 14 °F 72
Fig. 24 Proportional controller 73
Fig. 25 Filling the tank with the correct fuel type 76
Fig. 26 Battery isolating switch 82
Fig. 27 Adjusting the tool lubricator 83
Fig. 28 Generator cut-in pictogram 86
Fig. 29 Additional shut-off valve for compressed air extension hose 87
Fig. 30 Checking the coolant level 105
Fig. 31 Recommended mixture ratio for coolant 106
Fig. 32 Draining the coolant 108
Fig. 33 Maintenance indicator 109
Fig. 34 Engine air filter maintenance 110
Fig. 35 Cleaning the filter element 110
Fig. 36 Bleeding the fuel system 113
Fig. 37 Fuel prefilter maintenance 113
Fig. 38 Changing the filter cartridge 114
Fig. 39 Fuel/water separator 116
Fig. 40 Changing the engine oil 118
Fig. 41 Oil drain valve 118
Fig. 42 Changing the engine oil filter 120
Fig. 43 Checking belt tension by hand 122
Fig. 44 Example for anti-vibration mount of drive engine 123
Fig. 45 Safety signs - warning stickers on the battery 124
Fig. 46 Checking cooling oil level 128
Fig. 47 Plugs, oil separator tank 130
Fig. 48 Draining the compressor cooling oil 131
Fig. 49 Changing the oil filter 133
Fig. 50 Oil separator tank dirt trap maintenance 135
Fig. 51 Changing the oil separator cartridge 136
Fig. 52 Maintenance indicator 139
Fig. 53 Compressor air filter maintenance 140
Fig. 54 Cleaning the cooler 142

Fig. 55 Connecting rod alignment 146
Fig. 56 Tool lubricator maintenance 148
Fig. 57 Cleaning the compressed air after-cooler 150
Fig. 58 Cleaning the dirt trap 152
Fig. 59 Combination filter maintenance 154
Fig. 60 Changing the prefilter element 155
Fig. 61 Filter combination 156
Fig. 62 Top off antifreeze 158
Fig. 63 Engine air intake shut-off valve maintenance 159
Fig. 64 Replacing the generator belt 162
Fig. 65 Fuel filtration 164
Fig. 66 Fuel prefilter with integrated water separator 165
Fig. 67 Fuel filter with integrated water separator 166
Fig. 68 Position of lifting eye 224
Fig. 69 Example: Improperly inserted crane hook 224
Fig. 70 Insert the crane hook properly 225
Fig. 71 Prohibition signs for forklift transport 227
Fig. 72 Forklift example: Lifting accessory components 227
Fig. 73 Ensure both fork prongs are positioned under the machine 228
Fig. 74 Lifting the machine with a forklift 229
Fig. 75 Example: Transporting a machine by forklift 230
Fig. 76 Bracket systems as load securing (machine with chassis) 232
Fig. 77 Bracket systems as load securing (machine in stationary frame-type design) 232
Fig. 78 Battery labelling 234
Fig. 79 Identification 237
Fig. 80 Identification of the drive engine 237

List of Tables

Tab. 1	Danger levels and their definition (personal injury)	1
Tab. 2	Danger levels and their definition (damage to property)	2
Tab. 3	Nameplate	4
Tab. 4	Air treatment options	5
Tab. 5	Tool lubricator option	5
Tab. 6	Compressed air distributor option	5
Tab. 7	Proportional controller options	6
Tab. 8	Non-return option	6
Tab. 9	Low temperature equipment options	6
Tab. 10	Optional equipment for fire hazard areas	6
Tab. 11	Option ne: Fuel de-watering filter	7
Tab. 12	Battery isolating switch option	7
Tab. 13	Generator option	7
Tab. 14	Chassis options	7
Tab. 15	Lighting options	8
Tab. 16	Options for stationary frame design	8
Tab. 17	Closed floor pan option	9
Tab. 18	Hose reel option	9
Tab. 19	Anti-theft device option	9
Tab. 20	Sound pressure level	9
Tab. 21	Torques for M4–M8 screws	10
Tab. 22	Torques for M10–M24 screws	10
Tab. 23	Torque cover fixing screws oil separator tank	10
Tab. 24	Torques for lifting eye screws	10
Tab. 25	Ambient conditions	10
Tab. 26	Weight of the machine	11
Tab. 27	Working gauge pressure and FAD	11
Tab. 28	Compressed air distributor	12
Tab. 29	Interrelation between compressed air treatment and compressed air quality	12
Tab. 30	Safety valve opening pressure	13
Tab. 31	Machine temperatures	13
Tab. 32	Airend package discharge temperature	13
Tab. 33	Cooling oil recommendation	13
Tab. 34	Cooling oil recommendation (food processing)	14
Tab. 35	Cooling oil charge	15
Tab. 36	Engine specification	15
Tab. 37	Engine oil recommendation	16
Tab. 38	Water quality specification	16
Tab. 39	Initial fill of coolant cooler	17
Tab. 40	Fluid volumes	17
Tab. 41	Batteries	18
Tab. 42	Road breaker lubricant recommendation	18
Tab. 43	Ambient conditions, low temperature equipment	18
Tab. 44	Coolant pre-heater	18
Tab. 45	Recommended antifreeze	19
Tab. 46	Generator data, 400 V	19
Tab. 47	Flow rate in generator mode	20
Tab. 48	Connection sockets	20
Tab. 49	Circuit breaker	20
Tab. 50	Maximum three-phase power supply	20
Tab. 51	Maximum single phase power supply	21
Tab. 52	Generator data 115 V	21
Tab. 53	Flow rate in generator mode	21
Tab. 54	Connection sockets	22

List of Tables

Tab. 55 Circuit breaker 22
Tab. 56 Maximum 2–phase power supply 22
Tab. 57 Generator operating limits 23
Tab. 58 Output power reduction 23
Tab. 59 Additional discharge valve for the air hose 23
Tab. 60 Inspection intervals according to Ordinance on Industrial Health and Safety 26
Tab. 61 Danger areas 33
Tab. 62 Safety signs 34
Tab. 63 Generator / compressor operation 49
Tab. 64 Generator operating modes 49
Tab. 65 Low temperature equipment options 50
Tab. 66 Stationary machines 55
Tab. 67 Measures for recommissioning the machine following storage or decommissioning 62
Tab. 68 Checking installation and operating conditions 63
Tab. 69 Block antifreeze 67
Tab. 70 Test instructions for a generator with a ground leak detection device. 69
Tab. 71 Measures required should the fuel tank be filled with the incorrect fuel type 74
Tab. 72 Fuel / fuel specification 76
Tab. 73 Plug sockets on the exterior of the machine 79
Tab. 74 High-pressure washer setting 80
Tab. 75 Frost protector on and off 84
Tab. 76 Fault: “Engine stops or fails to start” 89
Tab. 77 Fault: “Engine not reaching full speed” 90
Tab. 78 Alarm: "Control lamp remains on" 90
Tab. 79 Fault: “Engine knocking or fails to start” 91
Tab. 80 Fault: Working pressure too high 91
Tab. 81 Fault: Working pressure too low 91
Tab. 82 Fault: Safety valve blowing off 92
Tab. 83 Fault: Machine overheating 92
Tab. 84 Alarm: "Too much oil residue in the compressed air" 93
Tab. 85 Alarm: "Oil flows from the compressor air filter after shutdown" 93
Tab. 86 Fault: High moisture content in the compressed air 94
Tab. 87 Fault: No voltage or too low a voltage from the generator 94
Tab. 88 Fault: Generator voltage too high 94
Tab. 89 Advise others that the machine is being serviced. 96
Tab. 90 Maintenance tasks after commissioning 98
Tab. 91 Maintenance intervals and regular maintenance tasks 98
Tab. 92 Regular machine maintenance tasks 99
Tab. 93 Regular maintenance tasks for options 102
Tab. 94 Coolant mixture table 107
Tab. 95 Oil drain valve 118
Tab. 96 Oil drain valve 131
Tab. 97 Regular machine maintenance tasks 163
Tab. 98 Maintenance log 169
Tab. 99 Compressor spare parts 170
Tab. 100 Engine spare parts 170
Tab. 101 "Temporarily decommissioned" information notice 220
Tab. 102 Checklist for long-term decommissioning/storage 221
Tab. 103 Notice text: “Long-term decommissioning/storage” 222
Tab. 104 Machine fluids 234
Tab. 105 Machine option fluids 235
Tab. 106 Machine filters/filter elements 235
Tab. 107 Machine option filters/filter elements 235

1 Regarding this Document

1.1 Using this document

The operating manual is a component of the product. It describes the machine as it was at the time of first delivery after manufacture.

- ➢ Keep the operating manual in a safe place throughout the life of the machine.
- ➢ Supply any successive owner or user with this operating manual.
- ➢ Please insert any amendment or revision of the operating manual sent to you.
- ➢ Enter details from the machine nameplate and individual items of equipment in the table in chapter 2.

1.2 Further documents

Further documents included with this operating manual are:

- Certificate of acceptance / operating instructions for the pressure vessel
- Declaration of Conformity in accordance with the applicable directive
- Chassis documentation (where applicable)

Missing documents can be requested from KAESER.

- ➢ Make sure all documents are complete and observe the instructions contained in them.
- ➢ Make sure you provide the data from the nameplate when ordering documents.

1.3 Copyright

This operator manual is copyright protected. Queries regarding use or duplication of the documentation should be referred to KAESER. Correct use of information will be fully supported.

1.4 Symbols and labels

- ➢ Please note the symbols and labels used in this document.

1.4.1 Warnings

Warning notices indicate risks potentially resulting in personal injury, if the measures specified are not taken.

Warning notices indicate three levels of danger identified by the corresponding signal word:

Signal word	Meaning	Consequences of ignoring the warning
DANGER	Warns of an imminent danger	Will very likely result in death or severe injury
WARNING	Warns of a potentially imminent danger	May result in death or severe injury
CAUTION	Warns of a potentially dangerous situation	May result in a moderate physical injury

Tab. 1 Danger levels and their definition (personal injury)

Some warning notes may precede a chapter. They apply to the entire chapter including all subsections.

Example:

⚠ DANGER

The type and source of the imminent danger is shown here!
The possible consequences of ignoring a warning are shown here.
The word "DANGER" indicates that death or severe injury can very likely result from ignoring the warning.

➢ *The measures required to protect yourself from danger are shown here.*

Warning notes referring to a subsection or the subsequent action are integrated into the procedure and numbered as an action.

Example:

1. **⚠ WARNING** *The type and source of the imminent danger is shown here!*
   The possible consequences of ignoring a warning are shown here.
   The word "WARNING" indicates that death or severe injury may result from ignoring the warning.
   ➢ *The measures required to protect yourself from danger are shown here.*
2. Always read and comply with warning instructions.

1.4.2 Potential damage warnings

Contrary to the warnings shown above, damage warnings do not indicate a potential personal injury.

Damage warnings have only one danger level, identified with this signal word:

Signal word	Meaning	Consequences of non-compliance
NOTE	Warns of a potentially dangerous situation	Damage to property is possible

Tab. 2 Danger levels and their definition (damage to property)

Example:

NOTICE

The type and source of the imminent danger is shown here!
Potential effects when ignoring the warning are indicated here.

➢ *The protective measures against the damages are shown here.*

➢ Carefully read and fully comply with warnings against damages.

1.4.3 Other alert notes and their symbols

This symbol indicates particular important information.

Material Here you will find details on special tools, operating materials or spare parts.

Precondition Here you will find conditional requirements necessary to carry out the task.
The conditions relevant to safety shown here will help you to avoid dangerous situations.

➢ This symbol is placed by lists of actions comprising one step of a task.

1. In process instructions with several steps ...
2. ... the sequence of steps is numbered.

Result — Shows the expected conclusion of the previous action.

Option da — ➢ Information relating to one option only is marked with an option code (e.g., "option da" means that this section is only valid for machines with the air treatment components "aftercooler and centrifugal separator"). Option codes used in this operating manual are explained in chapter 2.3.



Information referring to potential problems is identified by a question mark.

The cause is named in the help text ...

➢ ... and a remedy given.



This symbol refers to important information or measures concerning environmental protection.

Further information — Further topics are introduced here.

2 Technical Data

2.1 Nameplate

The machine's nameplate contains the model type and important technical information.

The nameplate is located on the outside of the machine (see illustration in chapter 13.1).

➢ Enter the data from the nameplate here as a reference:

Feature	Value
Portable rotary screw compressor	
Material no. / Serial no.	
Actual total weight	
Lifting point load capacity	
Rated power	
Rated engine speed	
Maximum gauge working pressure PS	

Tab. 3 Nameplate

2.2 Vehicle identification number

The vehicle identification number (VIN) is the only unmodifiable and therefore the most important identification feature on the machine.

The vehicle identification number remains associated with the machine throughout the entire duration of its service life. The vehicle identification number is stamped into the bodywork of the machine.

Further information For the location of the VIN stamp, see chapter 13.1.

2.3 Options overview

A list of the options built into your machine helps to correlate the information in this Operating Manual.
Available options are listed on the options label (option: code letters).

This label can be found:

- on the outside of the machine.
- see chapter 13.1.

Only the codes for those options fitted appear on the options label!

Options fitted:

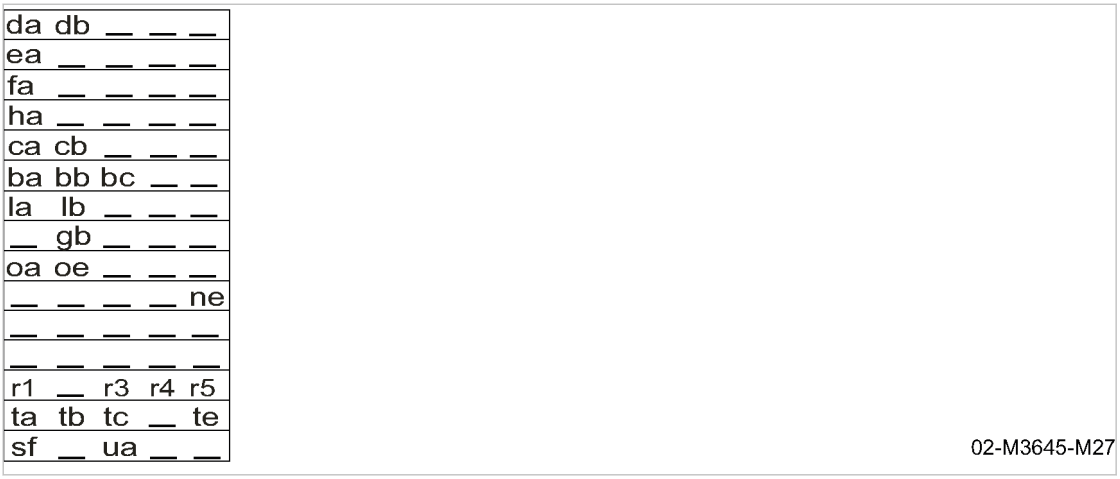

Fig. 1 Option label MOBILAIR M27 with options

[r1] Place holders for chassis options
[r3] Place holders for chassis options
[r4] Place holders for chassis options
[r5] Place holder for frame design options for stationary machines

- ➢ See the separate document "Chassis Operating Manual" for information about the option codes.
- ➢ Take a list of available options from the options label and enter these options as reference in the below overviews.

2.3.1 Option da, db, dd Air Treatment

Option	Option code	Available?
Aftercooler and water separator	da	
Heat exchanger	db	
Filter combination	dd	

Tab. 4 Air treatment options

2.3.2 Option ea, ec Tool lubricator

Option	Option code	Available?
Tool lubricator (with option fa)	ea	
Tool lubricator (with option fc)	ec	

Tab. 5 Tool lubricator option

2.3.3 Option fa, fc Compressed air distributor

Option	Option code	Available?
Non-separated compressed air distribution line	fa	

Option	Option code	Available?
Separated compressed air distribution lines, downstream of the option	fc	

Tab. 6 Compressed air distributor option

2.3.4 Option ca, cb Proportional controller

Option	Option code	Available?
Without manual adjustment	ca	
With manual adjustment	cb	

Tab. 7 Proportional controller options

2.3.5 Option ha Non-return function

Option	Option code	Available?
Check valve	ha	

Tab. 8 Non-return option

2.3.6 Option ba Low temperature equipment

Option	Option code	Available?
Low temperature equipment	ba	
Engine coolant pre-heating	bb	
Defroster	bc	

Tab. 9 Low temperature equipment options

2.3.7 Option la, lb Equipment for fire hazard areas

Option	Option code	Available?
Spark arrestor	la	
Spark arrestor and engine air intake shut-off valve (automatic)	lb	

Tab. 10 Optional equipment for fire hazard areas

2.3.8 Option ne
Fuel de-watering filter

Option	Option code	Equipped?
Fuel de-watering filter	ne	

Tab. 11 Option ne: Fuel de-watering filter

2.3.9 Option oa
Battery isolating switch

Option	Option code	Available?
Battery isolating switch	oa	

Tab. 12 Battery isolating switch option

2.3.10 Option ga, gb
Generator

Option	Option code	Available?
Machine without FAD limitation with generator in operation	ga	
Machine with FAD limitation with generator in operation	gb	

Tab. 13 Generator option

2.3.11 Option rb/rm/rr, rb/rm/rs, rc/ro/rr, rc/ro/rs, rg/rp/rr, rd/ro/rr, rd/rn/rr
Chassis

Chassis are defined by a combination of several option codes, as follows:
Version/Axle load/Height adjustment/Anti-twist protection/Service brake

Example: *rb/rm/rs* means:
Chassis is European version, with height adjustment and overrun brake

Chassis:

Chassis	Code	Available?
Version (rb, rc, rg, rd):		
EU chassis	rb	
GB chassis	rc	
EN chassis	rg	
US chassis	rd	
Height adjustment (rm, rn, ro):		
With height adjustment	rm	
Adjustable coupling height	rn	
EU ≙ Europe, GB ≙ Great Britain, EN ≙ England, US ≙ United States of America		

Chassis	Code	Available?
Without height adjustment	ro	
Anti-twist protection, tow bar tube (rp)		
Rotatable adapter	rp	
Service brake (rr, rs):		
Without service brake	rr	
With overrun brake	rs	
Axle load (rk, rl)		
Low	rk	
High	rl	
EU ≙ Europe, GB ≙ Great Britain, EN ≙ England, US ≙ United States of America		

Tab. 14 Chassis options

2.3.12 Option ta, tb, tc, te Lighting

Option	Option code	Available?
None (stationary)	ta	
Reflective warning triangle	tb	
EG - 12 V	tc	
USA - 12 V (DOT conformity)	te	

Tab. 15 Lighting options

2.3.13 Option rw,rx Frame design for stationary machines

The frame design for stationary machines is defined by the option designations as follows:

Frame designs

Frame	Option code	Equipped?
Stationary (rw, rx):		
On skids	rw	
On frame	rx	

Tab. 16 Options for stationary frame design

2.3.14 Option oe
Closed floor pan

Option	Option code	Available?
Closed floor pan	oe	

Tab. 17 Closed floor pan option

2.3.15 Option ua
Hose reels

Option	Option code	Available?
Hose reels	ua	

Tab. 18 Hose reel option

2.3.16 Option sf
Anti-theft device

Option	Option code	Available?
Anti-theft device	sf	

Tab. 19 Anti-theft device option

2.4 Machine (without options)

2.4.1 Sound pressure level

Sound pressure levels comply with the American EPA Standard.
Measurement distance: 23 ft

	M27
Guaranteed sound pressure level(1) [dB(A)]	76
(1) Applies exclusively to machines lined with sound proofing material.	

Tab. 20 Sound pressure level

2.4.2 Tightening torque

2.4.2.1 Tightening torques for screws

Overview:
- Standard values for M4–M8 screws
  - Surface finish: zinc plated (bright)
- Standard values for M10–M24 screws
  - Surface finish: zinc flake coating (matte).

➢ Set the torque as appropriate for the surface finish and friction coefficient.

Standard values for M4–M8 screws with steel grade 8.8:

Thread	M4	M5	M6	M8
Torque [lbf-in]	26.6	52.2	88.5	216.8
Surface finish: zinc plated (bright) Standards based on VDI 2230.				

Tab. 21 Torques for M4–M8 screws

Standard values for M10–M24 screws with steel grade 8.8:

Thread	M10	M12	M14	M16	M20	M24
Torque [lbf-in]	354	620	929	1416	2832	4868
Surface finish: zinc flake coating (matte). Standards based on VDI 2230.						

Tab. 22 Torques for M10–M24 screws

2.4.2.2 Torque cover fixing screws oil separator tank

Recommended values for screws corresponding to the strength category:

Screws	Strength category	Thread	Torque [lbf in]
Hex-head screw	5.6	M12	354

Tab. 23 Torque cover fixing screws oil separator tank

2.4.2.3 Torques for lifting eye

Recommended values for screws corresponding to the strength category:

Screws	Strength category	Thread	Torque [lbf in]
Hex-head screw	8.8	M12	708
Stud	8.8	M12	708

Tab. 24 Torques for lifting eye screws

2.4.3 Ambient conditions

Positioning	Limit value
Maximum altitude amsl* [ft]	3000
Minimum ambient temperature [°F]	14
Maximum ambient temperature [°F]	113
* Higher altitudes are permissible only after consultation with the manufacturer.	

Tab. 25 Ambient conditions

2.4.4 Additional specifications

For specifications, according to the machine's operating license, such as:

- dimensions,

- track width,
- footprint,

can be found in the dimensioned drawings in Chapter 13.3.

The dimensional drawings also show the position of the following inlets and outlets:

- Cooling air inlet
- Cooling air outlet
- Compressed air outlet
- Exhaust

2.5 Chassis

2.5.1 Chassis options

➢ Chassis instructions are found in the separate chassis documentation.

2.6 Machines with stationary frame design

2.6.1 Option rw, rx Weight of machines with stationary frame design

Actual weight of individual machines is dependent on equipment fitted (see machine nameplate).

➢ Enter the actual overall weight* from the nameplate into the table below for reference.

Option	rw	rx
Type of stationary frame design	Skids	Frame
Actual total weight [lb]*		
*Enter here for reference, the actual total weight taken from the nameplate of the machine.		

Tab. 26 Weight of the machine

2.7 Compressor

2.7.1 Working pressure and FAD

Definition of FAD: Constant delivery volume relative to intake conditions

Max. working pressure [psig]	100	145	175	203
SIGMA airend	11-G	11-G	11-G	11-G
Flow rate [cfm]	92	74	67	57
FAD as per ISO 1217:2009. Annex D				

Tab. 27 Working gauge pressure and FAD

2.7.2 Compressed air outlet

Outlet valve ["]	Number
G 3/4	2
G 1 1/2	–

Tab. 28 Compressed air distributor

2.7.3 Air quality at the compressed air outlets

The compressed air outlets at the air distributor are labelled with the identifiers of compressed air quality.

Interrelation between compressed air treatment and compressed air quality:

Air treatment		Compressed air quality	
Option designation	Components	Characteristics	Abbreviation
da	■ Compressed air aftercooler ■ Compressed air water separator	cool and condensate-free	A
da + db	■ Compressed air aftercooler ■ Compressed air water separator ■ Heat exchanger	dry and warmed	B
da + dd	■ Compressed air aftercooler ■ Compressed air water separator ■ Filter combination	dry and technically oil-free	F
da + dd + db	■ Compressed air aftercooler ■ Compressed air water separator ■ Filter combination ■ Heat exchanger	technically oil-free and warmed	G
ea / ec	Tool lubricator	lubricated	E

Tab. 29 Interrelation between compressed air treatment and compressed air quality

2.7.4 Safety valves

Maximum working pressure: see machine nameplate

Maximum working pressure [psi]	Activating pressure [psi]	
	Safety valve *	Safety valve **
100	145	–
145	175	165
175	220	203
203	230	220

* on oil separator tank
** upstream of the compressed air outlet (option cb only)

Tab. 30 Safety valve opening pressure

2.7.5 Select temperature

2.7.5.1 Thermostatic valve

A thermostatic valve regulates the compressor temperature accordingly.

Machine temperatures	Values
Recommended airend discharge temperature for switching to load [°F]	86
Typical airend discharge temperature during operation [°F]	167 212
Maximum airend discharge temperature (automatic safety shut-down) [°F]	239

Tab. 31 Machine temperatures

2.7.5.2 Thermostatic valve with Anti-Frost Control

A thermostatic valve with Anti-Frost Control regulates the temperature level of the machine depending on the ambient temperature.

Temperatures	Values	
Ambient temperature [°F]	< 50	68
Airend discharge temperature [°F]	194	149–185

Tab. 32 Airend package discharge temperature

2.7.6 Cooling oil recommendation

A sticker showing the type of oil used is located near the oil separator tank filler.

Information on ordering cooling oil is found in chapter 11.

Cooling oils for general applications

	SIGMA FLUID		
	MOL	S-460	S-570
Description	Mineral oil	Synthetic oil	Synthetic oil

	SIGMA FLUID		
	MOL	S-460	S-570
Application	Standard oil for all applications except in connection with processing of food products. Particularly suitable for machines with a low duty cycle.	Standard oil for all applications except in connection with processing of food products. Particularly suitable for machines with a high duty cycle. Not suitable for East and Southeast Asia.	Special oil for ambient conditions with high temperatures and humidity. Standard oil for all applications except in connection with foodstuffs. Particularly suitable for machines with a high duty cycle.
Viscosity at 104 °F	0.07 in^2/s (D 445; ASTM test)	0.07 in^2/s (D 445; ASTM test)	0.08 in^2/s (D 445; ASTM test)
Viscosity at 212 °F	0.01 in^2/s (D 445; ASTM test)	0.01 in^2/s (D 445; ASTM test)	0.01 in^2/s (D 445; ASTM test)
Flash point	446 °F (D 92; ASTM test)	484 °F (D 92; ASTM test)	496 °F (D 92; ASTM test)
Density at 59 °F	54.2 lb/ft^3 (D 4052; ASTM test)	53.7 lb/ft^3 (D 4052; ASTM test)	54.2 lb/ft^3 (D 4052; ASTM test)
Pour point:	−22 °F (D 97; ASTM test)	−16.6 °F (D 97; ASTM test)	−65 °F (D 97; ASTM test)

Tab. 33 Cooling oil recommendation

Cooling oils for applications in food processing

	SIGMA FLUID	
	FG-460	FG-680
Description	Synthetic oil	Synthetic oil
Application	Specifically for machines in applications where the compressed air may come into contact with foodstuff.	Special oil for ambient conditions with high temperatures and humidity. Specifically for machines in applications where the compressed air may come into contact with foodstuff.
Approval	USDA H1, NSF approved for the manufacture of food packaging, meat and poultry processing and other food processing applications.	USDA H1, NSF approved for the manufacture of food packaging, meat and poultry processing and other food processing applications.
Viscosity at 104 °F	0.07 in^2/s (D 445; ASTM test)	0.10 in^2/s (D 445; ASTM test)
Viscosity at 212 °F	0.01 in^2/s (D 445; ASTM test)	0.02 in^2/s (D 445; ASTM test)
Flash point	475 °F (D 92; ASTM test)	460 °F (D 92; ASTM test)
Density at 59 °F	54.5 lb/ft^3 (D 4052; ASTM test)	53.3 lb/ft^3 (D 4052; ASTM test)

	SIGMA FLUID	
	FG-460	FG-680
Pour point:	–38.2 °F (D 97; ASTM test)	–38.2 °F (D 97; ASTM test)

Tab. 34 Cooling oil recommendation (food processing)

2.7.7 Cooling oil charge

Cooling oil	Fluid volume [qt]
Machine	5.3
Compressor unit + heat exchanger (Option db)	5.3

Tab. 35 Cooling oil charge

2.8 Engine

2.8.1 Engine specification

Feature	Specification
Make/Model	Kubota D-1105
Engine control	Mechanical
Fuel injection	Mechanical
Rated engine power [hp]	24.4
Speed at LOAD mode [rpm]	2850
Speed at IDLE mode [rpm]	2150
Type of fuel	Diesel *
Fuel consumption under LOAD mode [gal/h]	1.4
Oil consumption relative to fuel consumption [%]	approx. 0.2
* Use only diesel fuel to EN 590 or ASTM D975. Consult the engine manufacturer on the use of other fuels if necessary.	

Tab. 36 Engine specification

2.8.2 Oil recommendation

The engine oil must meet the following classification:

- ACEA, class E4, E7
- API, class CF, CI-4

The engine is filled initially with engine oil of viscosity class SAE 10W–40.

Ambient temperature [°F]	Viscosity class
−22 – 86	SAE 0W–30 SAE 5W–30
−22 – 104	SAE 0W–40 SAE 5W–40
−4 – 86	SAE 1 W–30
−4 – 104	SAE 10W–40
−5 – 104	SAE 15W–40
23 – 104	SAE 20W–50

Tab. 37 Engine oil recommendation

2.8.3 Fuel recommendation

The diesel fuel must meet the requirements of EN 590 and ASTM D975 respectively.

According to these standards a specific portion of bio diesel is permitted in the fuel.

Depending on the country of origin, bio diesel can be produced from different plant materials and thus have different properties.

Affected by temperature, atmospheric oxygen and time, these bio diesel components in the fuel may decompose in the fuel and thus cause damages within the fuel system.



The use of other fuels as well as the mixing with additives is only permitted after consultation with the engine manufacturer.

2.8.4 Engine coolant recommendation

In fluid-cooled engines, the cooling fluid must be treated and monitored to prevent engine damage.

Water quality:

An important factor in the treatment of cooling fluid is the correct water quality.

As a rule, clear, clean fresh water must be used, which should be as soft as possible and in accordance with the following analytical values:

Feature		Value
pH value		6.5-8.0
Chloride	[mg/l]	Max. 80
Chloride + sulfate	[mg/l]	Max. 160
Alkaline ground ions	mmol/l	2.7
Hardness	°dH	15
1°dH = 0.1783 mmol/l; alkaline ground ions = 7.147 mg/l Ca^{2+} or 4.336 mg/l Mg^{2+}		

Tab. 38 Water quality specification

Contact the local water utilities for information regarding water quality. If the water does not meet the above parameters, it must be treated.

If suitable water is not available, distilled or demineralized water should be used for treating the coolant. Seawater, brackish water, brine and industrial wastewater are not suitable. Salts may cause corrosion or the formation of disruptive residues.

Coolant quality:

In the course of ongoing technical development, a new corrosion inhibitor/antifreeze has been approved by the engine manufacturer.

This features the following advantages over the corrosion inhibitors/antifreeze that was approved previously:

- Less residue in the engine cooling system
- Improved heat flow
- Improved environmental compatibility

The coolant (cooling fluid) is treated by the addition of anti-freeze with ethylene glycol-based anti-corrosion additives to the water.

The coolant used must be in accordance with the stipulations provided by the engine manufacturer KUBOTA.

➢ Do not use a corrosion inhibitor/antifreeze that has not been approved by the engine manufacturer.

➢ Avoid impermissible mixing ratios of corrosion inhibitor/antifreeze and water.

Further information For information regarding the preparation/mixing of the coolant, please see chapter 10.3.1.3 “Mixing the Coolant”.

Initial fill of corrosion inhibitor/antifreeze:

For the initial fill, the coolant cooler is filled with a mixture of the following fluid components:

Components	Description	Percentages [% vol.]
Corrosion inhibitor/antifreeze	KAESER FLUID ENGINE ANTIFREEZE / (Glysantin® G40®)	50
Water		50

Tab. 39 Initial fill of coolant cooler

Miscibility with other corrosion inhibitors/antifreezes:

Mixing with different corrosion inhibitors/antifreezes is not recommended, even if from the same manufacturer. This can result in significantly reduced corrosion/antifreeze protection, which may damage the engine cooling system and, consequently, the engine. A mixtures of different types of anti-corrosion agent/antifreeze generally provides a lower level of performance than the specially balanced active components of a single coolant type.

Consequently, the use of different corrosion inhibitors/antifreezes is only permitted following consultation with and approval from the engine manufacturer!

2.8.5 Fluid volumes

Description	Fluid volume [gal]
Engine oil	1.1
Fuel	10.6
Coolant	1.3

Tab. 40 Fluid volumes

2.8.6 Batteries

Feature	Value
Voltage [V]	12
Capacity [Ah]	62
PTC testing current [A] (according to EN 50342)	520

Tab. 41 Batteries

Further information Depending on machine equipment, a higher capacity battery may be required. See chapter 2.9.2.

2.9 Options

2.9.1 Option ea, ec Tool lubricator

Name	Temperature range [°F]	Fluid volume [gal]
Special road breaker lubricant	−13 – 122	0.7

Tab. 42 Road breaker lubricant recommendation

2.9.2 Low temperature equipment

2.9.2.1 Ambient conditions

Positioning	Limit value
Maximum elevation amsl* [ft]	3000
Minimum ambient temperature [°F]	−13
Maximum ambient temperature [°F]	113
* Higher altitudes are permissible only after consultation with the manufacturer	

Tab. 43 Ambient conditions, low temperature equipment

2.9.2.2 Option bb Coolant pre-heater

Coolant pre-heater	Value
Voltage [V]	230
Power [W]	550

Tab. 44 Coolant pre-heater

2.9.2.3 Option bc
Compressed air line frost protection

Antifreeze	Fluid volume [qt]
Wabcothyl	0.32

Tab. 45 Recommended antifreeze

2.9.3 Generator

Your machine may be equipped with one of the following synchronous generators:

2.9.3.1 400 V AC generator

The following connections are provided on the generator control cabinet:

- 1 x 400 V 3-phase AC
- 2 x 230 V AC

Generator specifications:

Voltage [V]	400/3~	230/1~
Rated power [kVA] 3-phase	6.5	–
Rated power [kW] Single-phase	–	4.0
Voltage constant [%] Balanced load	±5	
Voltage constant [%] Single phase, unbalanced load	+6/−10	
Rated current [A] 3-phase	8.7	–
Rated current [A] Single-phase	–	17.4
Rated current [A] Short-circuit (0.3 s/170 V)	260	260
Power factor (cos phi)	0.8 – 1	
Frequency [Hz]	50	
Speed [rpm]	3000	
Distortion factor [%]	<5	
Type	Synchronous internal pole generator, brushless	
Control	Electronically controlled with control electronics	
Enclosure protection	IP 54	

Tab. 46 Generator data, 400 V

Option gb Reduced flow in generator mode

Voltage [V]	400 V, 3~	230 V, 1~
Max. working pressure [psig]	100	100
SIGMA airend	11-G	11-G
Reduced flow rate [cfm] without loss of power output	67	67
Zero flow rate [cfm] with loss of power output	0	0

Tab. 47 Flow rate in generator mode

Connections

Voltage [V]	400 V, 3~	230 V, 1~
Power sockets	Number:	Number:
16 A; 400 V/3~/N/PE	1	–
16 A; 230 V/1~/N/PE	–	2

Tab. 48 Connection sockets

Circuit breaker

Voltage [V]	400/3~	230/1~
Safety cut-out [A]	Number:	Number:
16	1	1

Tab. 49 Circuit breaker

Maximum power loading by consumers

Resistive consumers include lamps and heaters, for example.
Electric engines and transformers are inductive consumers.

Nominal rating conditions:

- Ambient temperature: 77 °F
- Max. height above sea level of the place of installation: 3000 ft

3-phase power supply

Generator	400 V, 3~
Rated power [kVA]	6.5
Resistive consumers [kVA]	6.0
Inductive consumers [kW]	4.0

Tab. 50 Maximum three-phase power supply

Single phase power supply

Generator	230 V, 1~
Rated power [kVA]	4.0
Resistive consumers [kVA]	4.0
Inductive consumers [kW]	4.0

Tab. 51 Maximum single phase power supply

2.9.3.2 115 V AC generator

The following connections are provided on the generator control cabinet:

- 1 x 115 V AC (32 A)
- 2 x 115 V AC (16 A)

Generator specifications:

Voltage [V]	115/2~
Rated power [kW] 2-phase	6.0
Voltage constant [%] Balanced load	±5
Voltage constant [%] Single phase, unbalanced load	+6/−10
Rated current [A] 2-phase	34.8
Rated current [A] Short-circuit (0.3 s/170 V)	420.0
Power factor (cos phi)	0.8 – 1
Frequency [Hz]	50
Speed [rpm]	3000
Distortion factor [%]	<5
Type	Synchronous internal pole generator, brushless
Control	Electronically controlled with control electronics
Enclosure protections	IP 54

Tab. 52 Generator data 115 V

Option gb Reduced flow in generator mode

Voltage [V]	115 V, 2~
Max. working gauge pressure [psig]	100
SIGMA airend	11-G

Voltage [V]	115 V, 2~
Reduced flow rate [cfm] Without loss of power output	67
Zero flow rate [cfm] With loss of power output	0

Tab. 53 Flow rate in generator mode

Connections

Voltage [V]	115 V, 2~
Power sockets	Number:
32 A; 115 V/1~/PE	1
16 A; 115 V/1~/PE	2

Tab. 54 Connection sockets

Circuit breaker

Voltage [V]	115/2~
Safety cut-out [A]	Number:
32	1
16	2

Tab. 55 Circuit breaker

Maximum power loading by consumers

Resistive consumers include lamps and heaters, for example.
Electric engines and transformers are inductive consumers.

Nominal rating conditions:

- Ambient temperature: 77 °F
- Max. height above sea level of the place of installation: 3000 ft

2–phase power supply

Generator	115 V/2~
Nominal power [kVA]	6.0
Resistive consumers [kVA]	6.0
Inductive consumers [kW]	4.0

Tab. 56 Maximum 2–phase power supply

2.9.3.3 Operating limits

(According to EN 60034-22, table on page 10.)

Features	Value
Design category	G3
Voltage adjustment range [%]	±5
Static voltage deviation [%]	1
Maximum dynamic voltage drop [%]	–15
Maximum dynamic voltage rise [%]	20
Maximum voltage settling time [ms]	1500
Maximum voltage asymmetry [%]	1

Tab. 57 Generator operating limits

2.9.3.4 Factor of output power reduction

The output power is dependent on installation altitude and ambient temperature.

Output power reduction		
Ambient temperature [°F]	104	113
Altitude AMSL [ft]	3000	3000
Factor of output power reduction	1.0	0.95

Tab. 58 Output power reduction

2.9.4 Option ua
Air hose with hose reel

The machine is equipped with an additional discharge valve for this option.

Name	Discharge valve	Compressed air hose
Size ["]	G 3/4	–
Number	1	–
Length [ft]	–	66

Tab. 59 Additional discharge valve for the air hose

3 Safety and Responsibility

3.1 Basic instructions

The machine is manufactured to the latest engineering standards and acknowledged safety regulations. Nevertheless, dangers can arise through its operation:

- Danger to life and limb of the operator or third parties,
- Impairments to the machine and other material assets.

⚠ Disregard of warning or safety instructions can cause serious injuries!

➢ Use this machine only if it is in a technically perfect condition and only for the purpose for which it is intended; observe all safety measures and the instructions in the service manual!

➢ Immediately rectify (have rectified) any faults that could be detrimental to safety!

3.2 Specified use

The machine is intended solely for generating compressed air for industrial use. Any other use is considered incorrect. The manufacturer is not liable for any damages that may result from incorrect use. The user alone is liable for any risks incurred.

➢ Keep to the specifications listed in this service manual.

➢ Operate the machine only within its performance limits and under the permitted ambient conditions.

➢ Do not use compressed air for breathing purposes unless it is specifically treated.

➢ Do not use compressed air for any application that will bring it into direct contact with food products unless it is specifically treated.

3.3 Incorrect Use

Improper usage can cause damage to property and/or (severe) injuries.

➢ Only use the machine as intended.

➢ Never direct compressed air at persons or animals.

➢ Do not use untreated compressed air for breathing purposes.

➢ Do not allow the machine to take in toxic, acidic, flammable, or explosive gases or vapors.

➢ Do not operate the machine in areas in which specific requirements with regard to explosion protection are in effect.

3.4 User’s responsibilities

3.4.1 Observe statutory and universally accepted regulations

➢ Observe all relevant statutory and accepted regulations during transportation, operation, cleaning, and maintenance of the machine.

3.4.2 Determining personnel

Suitable personnel are experts who, by virtue of their training, knowledge, and experience, as well as their knowledge of relevant regulations, can assess the work to be done and recognize the possible dangers involved.

Authorized operating personnel must possess the following qualifications:

- They must be of legal age.
- They must have read and understood the safety instructions and sections of the operating manual applicable to operation, and they must be capable of observing them.
- They must have received adequate training in and authorization for the safe operation of automotive, electrical and compressed air devices.

Authorized maintenance personnel must possess the following qualifications:

- They must be of legal age.
- They must have read and understood the safety instructions and sections of the operating manual applicable to maintenance, and they must be capable of observing them.
- They must be completely familiar with the safety concepts and regulations of automotive, electrical, and compressed air engineering.
- They must be capable of recognizing the possible dangers associated with automotive, electrical, and compressed air devices and taking appropriate measures to safeguard persons and property.
- They must have received adequate training in and authorization for safe maintenance of this machine.

Authorized cleaning personnel must possess the following qualifications:

- They must be of legal age.
- They must have read and understood the safety instructions and sections of the operating manual applicable to cleaning, and they must be capable of observing them.
- They must be completely familiar with the safety concepts and regulations of automotive, electrical, and compressed air engineering.
- They must be capable of recognizing the possible dangers associated with automotive, electrical, and compressed air devices and taking appropriate measures to safeguard persons and property.
- They must have received adequate instruction in and authorization for the safe cleaning of this machine.

Authorized transport personnel must possess the following qualifications:

- They must be of legal age.
- They must have read and understood the safety instructions and sections of the operating manual applicable to transportation, and they must be capable of observing them.
- They must have received adequate training in and authorization for the safe transportation of this machine.
- They must be completely familiar with the safety concepts and regulations of motor vehicles and transported goods.
- They must be capable of recognizing the possible dangers associated with automotive devices and taking appropriate measures to safeguard persons and property.

➢ Ensure that personnel entrusted with transportation, operation, cleaning, and maintenance possess the necessary qualifications and authorizations to carry out their respective tasks.

3.4.3 Complying with inspection schedules and accident prevention regulations

The machine is subject to local inspection schedules.

- ➢ Have the pre-commissioning inspection carried out according to the Ordinance on Industrial Safety and Health, §15.
- ➢ Carry out recurring inspections:
  The user must ensure that the machine's safety devices are checked for function as required or at least annually.
- ➢ Carry out oil changes:
  The user must ensure that the cooling oil is changed as required or at least annually and the oil change must be documented. Intervals may be varied if an analysis proves that the oil is still usable.
- ➢ Keep to inspection intervals in accordance with the Ordinance on Industrial Health and Safety with maximum intervals as laid down in §16:

Inspection	Inspection interval	Inspection authority
Equipment inspection	Before commissioning	Approved supervisory body.
Internal inspection	Every 5 years after commissioning or the last inspection	Contact an authorized KAESER service representative.
Strength test	Every 10 years after commissioning or the last inspection	Contact an authorized KAESER service representative.

Tab. 60 Inspection intervals according to Ordinance on Industrial Health and Safety

Checking the lifting point

The user is responsible for ensuring that the machine's lifting point and fixings are inspected according to national regulations for wear and damage.

- ➢ Have lifting point checked.

  Lifting point is not in order: The machine must not be transported by crane. Have the machine repaired immediately.

3.5 Dangers

Basic instructions

The following describes the various forms of danger that can occur during machine operation.

Basic safety instructions are found in this service manual at the beginning of each chapter in the section entitled 'Safety'.

Warning instructions are found before a potentially dangerous task.

3.5.1 Safely dealing with sources of danger

The following describes the various forms of danger that can occur during machine operation.

Exhaust fumes

Exhaust gases from combustion engines contain carbon monoxide, a color- and odorless but highly toxic gas. The inhalation of minute quantities can be lethal.

Furthermore, diesel exhaust contains soot particles, some of which are noxious.

- ➢ Do not inhale exhaust fumes.
- ➢ Park the machine in such a manner that the exhaust cannot blow towards the operators.
- ➢ Never use the machine in enclosed spaces, only in the open.

Fire and explosion

Spontaneous ignition and combustion of fuel can result in serious injury or death.

- ➢ Do not allow open flames or sparks at the place of use.
- ➢ Do not smoke while refueling.
- ➢ Never refuel the machine when it is running.
- ➢ Do not allow fuel to overflow.
- ➢ Wipe up spilled fuel immediately.
- ➢ Provide a fire extinguisher in the immediate vicinity.
- ➢ For the operation in combustible environment, fit the machine with a spark arrestor (Option Ia).

Hot coolant

The cooling system of a liquid-cooled engine at running temperature is under high pressure. If the filler cap is unscrewed, hot coolant can spray out under pressure and cause severe burns.

- ➢ Let the machine cool down before opening the cooling system.
- ➢ Unscrew the filler cap carefully by a quarter to half a turn at first. Remove the filler cap only when pressure has escaped completely.

Electricity

Touching voltage-carrying components can result in electric shocks, burns or even death.

- ➢ Allow only qualified and authorized electricians or trained personnel under the supervision of a qualified and authorized electrician to carry out work on electrical equipment according to electrical engineering rules.
- ➢ Regularly check that all electrical connections are tight and in proper condition.
- ➢ Switch off any external power sources.
  For example, the connection to the electrical engine coolant pre-heater.

Forces of compression

Compressed air is contained energy. Uncontrolled release of this energy can cause serious injury or death. The following information concerns any work on components that could be under pressure.

- ➢ Wait until the compressor has automatically vented (check the pressure gauge: it must read 0 psig!)
- ➢ Then open an outlet valve carefully to ensure that the line between the minimum pressure check valve and the compressed air outlet is vented.
- ➢ Do not carry out welding, heat treatment or mechanical modifications to pressurised components (e.g. pipes and vessels) as this influences the components' resistance to pressure. The safety of the machine is then no longer ensured.

Compressed air quality

The composition of the compressed air must be suitable for the actual application in order to preclude health and life-threatening dangers.

- ➢ Use appropriate systems for air treatment before using the compressed air from this machine as breathing air (fresh air reinforcement) and/or for the processing of foodstuffs.
- ➢ Use food grade cooling oil whenever compressed air is to come into contact with foodstuffs.

Spring forces

Springs under tension or compression store energy. Uncontrolled release of this energy can cause serious injury or death.
Minimum pressure check valves, safety relief valves and inlet valves are powerfully spring-loaded.

- ➢ Do not open or dismantle any valves.

Rotating components

Touching the fan wheel, the coupling or the belt drive while the machine is switched on can result in serious injury.

- ➢ Do not open the service doors or panels while the machine is running.
- ➢ Prior to opening the service doors or the enclosure, switch off the engine, disconnect from power source and secure against unintended reactivation.
- ➢ Wear close-fitting clothes and a hair net if necessary.
- ➢ Ensure that all covers and safety guards are in place and secured before re-starting.

Temperature

The operation of the combustion engine and the compression generate high temperatures. Touching hot components may cause injuries.

- ➢ Avoid contact with hot components.
  These include combustion engine, airend, oil and compressed air lines, coolers and oil separator tank. Any objects in or near the flow of exhaust gas or discharged cooling air will become very hot.
- ➢ Wear protective clothing.
- ➢ Wear protective gloves when connecting or disconnecting external compressed air hoses to the outlet valves.
- ➢ Allow the machine to cool down before commencing any maintenance work.
- ➢ If welding is carried out on or near the machine, take adequate measures to prevent sparks or heat from igniting oil vapors or parts of the machine.

Noise

The enclosure absorbs the machine noise to a tolerable level. This function will be effective only if the body is closed.

- ➢ Operate the machine only with closed body.
- ➢ Check machines that are lined with sound insulation material for perfect condition of the sound insulation material.
- ➢ Wear ear protection if necessary.
  Safety relief valve blow-off results in high noise emission.
- ➢ Never generate compressed air without consumers being connected.

Operating fluids/materials

The used operating fluids and materials can cause adverse health effects. Suitable safety measures must be taken in order to prevent injuries.

- ➢ Strictly forbid fire, open flame and smoking.
- ➢ Follow safety regulations when dealing with fuel, oils, lubricants, antifreeze and chemical substances.
- ➢ Avoid contact with skin and eyes.
- ➢ Do not inhale fumes or aerosols from fuel or oil.
- ➢ Do not eat or drink while handling fuel, oil, cooling and lubricating fluids or antifreeze.
- ➢ Keep suitable fire extinguishing agents ready for use.
- ➢ Use only KAESER approved operating materials.

Unsuitable spare parts

Unsuitable spare parts compromise the safety of the machine.

- ➢ Use only spare parts approved by the manufacturer for use in this machine.
- ➢ Use only original KAESER spare parts on pressure bearing parts.

Conversion or modification of the machine

Modifications, additions or conversions to or of the machine can result in unpredictable hazards.

- ➢ Do not convert or modify the machine!
- ➢ Do not install any non-approved additional components.
- ➢ Do not make any changes to the machine that will increase its weight beyond the permissible limit and/or endanger its safe use or transportation. Any such changes invalidate the approval to use the machine or tow it on the road.
- ➢ Prior to any technical modification and expansions of the machine, obtain the written approval of the manufacturer.

3.5.2 Safe machine operation

The following information will provide you with the necessary code of conduct to ensure safe handling of the machine during individual product life phases.

Personal protective equipment

When working on the machine you may be exposed to dangers that can result in accidents with severe adverse health effects.

- ➢ Wear protective clothing as necessary.

Suitable protective clothing (examples):

- ■ Safety work wear
- ■ Protective gloves
- ■ Safety boots
- ■ Eye protection (protective glasses)
- ■ Ear protection

3.5.2.1 Transporting

In order to prevent accidents, the weight and size of the machine require safety measures to be taken during its transport.

- ➢ Allow transport only by personnel trained in safely dealing with motor vehicles and the transport of goods.
- ➢ Ensure that no persons are on the machine when transporting.

Transporting as trailer

Non-compliance with the basic rules for safe trailer operation may cause severe accidents during machine transport.

- ➢ The maximum permissible load for the towing vehicle coupling and the maximum coupling load given for the machine must not be exceeded.
- ➢ Avoid causing a shift in the center of gravity by an excessive or incorrectly distributed load.
- ➢ Do not tow in a manner that will impose excessive stress on the machine or chassis.
- ➢ Adjust towing speed to accommodate road conditions. This applies particularly to unpaved roads and when negotiating curves.
- ➢ The towbar must be parallel with the ground otherwise towing instability can develop, resulting in damage to the machine and/or towing vehicle.
- ➢ Before moving the machine, make sure any security devices (e.g. anti-theft chain) are removed or turned off.

Transporting as trailer on public roads

- ➢ Do not tow machines without lighting and signaling equipment on public roads.
- ➢ Ensure all running gear, including chassis, wheels, brakes, signalling and lighting, is in safe condition.
- ➢ The local laws and regulations regarding the use of public roads must be observed.

Transporting with a crane

Non-compliance with the safety regulations for load suspension and hoisting equipment may cause severe accidents when lifting and moving the machine with cranes.

- ➢ Do not enter the danger zone while the machine is being lifted.
- ➢ Never lift and move the machine over people or occupied buildings.
- ➢ Avoid extreme weight shifting caused by additional loads or additions (tilting).
- ➢ Do not exceed the lifting capacity on the machine's lifting point (lifting eye).
- ➢ Only the designated lifting point should be used to attach lifting gear and under no circumstances are handles, tow-bar or other components to be used.
- ➢ Use only hooks and shackles that comply with local safety regulations.
- ➢ Do not attach cables, chains or ropes directly to the machine's lifting eye.
- ➢ Do not manipulate the crane suspension system, in particular the holding points of the crane lifting eye.
- ➢ If screwed crane fixings had to be removed, please use only new self-locking nuts when installing.
- ➢ Avoid jerking when lifting, as this may damage components.
- ➢ Loads must be slowly lifted and carefully set down.
- ➢ Never allow the load to hang from the hoist longer than necessary.

The following are forbidden:

- Air transport of the machine by slinging beneath a helicopter.
- Dropping the machine by parachute.

3.5.2.2 Positioning

A suitable installation location for the machine prevents the potential for accidents and faults.

- ➢ Do not position the machine directly against a wall. A build-up of heat from the exhaust can damage the machine.
- ➢ Ensure accessibility so that all work on the machine can be carried out without danger or hindrance.
- ➢ Do not operate in areas in which specific requirements with regard to explosion protection are in force.
  For example, requirements on the "proper use in areas at risk of explosion" according to 2014/34/EU ATEX Directive.
- ➢ Ensure adequate ventilation.
- ➢ Place the machine in such a manner that the working conditions in its environment are not impaired.
- ➢ Comply with limit values for ambient temperatures and humidity.
- ➢ The intake air must not contain any damaging contaminants.

Damaging contaminants are for instance:

- Exhaust gases from combustion engines,
- Flammable, explosive or chemically unstable gases or vapors,
- Acid- or base-forming chemicals such as ammonia, chlorine, or hydrogen sulfide.

- ➢ Do not position the machine in the warm exhaust air flow from other machines.
- ➢ Keep suitable fire extinguishing agents ready for use.
- ➢ Chock the wheels to prevent unwanted movement.
- ➢ Do not place additional loads on the machine (e.g. excavator bucket as anti-theft measure).

3.5.2.3 Commissioning, operation and maintenance

During commissioning, operation and maintenance you may be exposed to dangers resulting from, e.g., electricity, pressure and temperature. Careless actions can cause accidents with severe adverse effects for your health.

- ➢ Work should be carried out by authorized personnel only.
- ➢ Wear close-fitting, flame-resistant clothing. Wear protective clothing as necessary.
- ➢ Switch off the machine and lock out the power supply disconnecting device.
- ➢ Wait until the compressor has automatically vented (check: the pressure gauge must read 0 psig!)
- ➢ Then open the outlet valve carefully to ensure that the line between the minimum pressure check valve/check valve and the compressed air outlet is vented.
- ➢ Allow the machine to cool down.
- ➢ Do not open the body while the machine is switched on.
- ➢ Do not open or dismantle any valves.
- ➢ Use only spare parts approved by KAESER for use in this machine.
- ➢ Carry out regular inspections:

- for visible damage and leakage,
- of safety devices,
- of EMERGENCY STOP push button,
- of parts needing monitoring.

➢ Pay particular attention to cleanliness during all maintenance and repair work. Cover components and exposed openings with clean cloths, paper or tape to keep them clean.
➢ Do not leave any loose components, tools or cleaning rags on or in the machine.
➢ Components removed from the machine can still be dangerous:
Do not attempt to open or destroy any components taken from the machine.
➢ Use only suitable compressed air hoses.

Compressed air hoses must meet the following requirements:

- they are of the right type and size for the highest permissible machine working pressure,
- they are not damaged, worn or of reduced quality,
- they have couplings and connections of the right type and size.

➢ Make sure compressed air hoses are depressurized before disconnecting from the machine.
➢ Secure the open end of an air hose before applying air pressure. An unsecured hose may whip and cause injury.
➢ At working pressures >100 psig, compressed air hoses should be secured by a safety cable to their respective outlet valves.

3.5.2.4 Parking the machine

Improper parking and use of the parked machine endangers personnel and material.

➢ Select an even surface for parking.
➢ Use a coupled towing vehicle to move the machine into position.
➢ Place chocks under the wheels.
➢ Pull the parking brake.
➢ Loosen the lighting and signaling system.
➢ Detach the breakaway cable/safety chain.
➢ Lower the prop stand / wind down the jockey wheel.
➢ Uncouple the machine
➢ Ensure that the machine is properly separated from the towing vehicle.
➢ Remove the towing vehicle from the machine.
➢ Nobody must enter the parked machine or, in particular, its chassis.
➢ Nobody must sit on the parked machine or, in particular, its towing mechanism.

3.5.2.5 De-commissioning, storage and disposal

Improper handling of old operating fluids and components represents a danger for the environment.

➢ Drain off fluids and dispose of them according to applicable environmental regulations. These include, for example, fuel, engine oil and compressor cooling oil and coolant.
➢ Dispose of the machine in accordance with local environmental regulations.

3.5.3 Organizational Measures

- ➢ Designate personnel and their responsibilities.
- ➢ Give clear instructions on reporting faults and damage to the machine.
- ➢ Give instructions on fire reporting and fire-fighting measures.

3.5.4 Danger areas

The table gives information on areas dangerous to personnel.

Only authorized personnel may enter these areas.

Task	Danger area	Authorized personnel
Transport	Within a 10 ft radius of the machine.	Operating personnel to prepare for transport. No personnel during transport.
	Beneath the lifted machine.	No personnel!
Commissioning	Within the machine. Within a 3 ft radius of the machine.	Maintenance personnel
Operation	Within a 3 ft radius of the machine.	Operating personnel
Maintenance	Within the machine. Within a 3 ft radius of the machine.	Maintenance personnel

Tab. 61 Danger areas

3.6 Safety devices

Safety devices ensure safe working with the machine.

- ➢ Do not change, bypass or disable safety devices.
- ➢ Regularly check safety devices for their correct function.
- ➢ Do not remove or obliterate labels and notices.
- ➢ Ensure that labels and notices are clearly legible.

Further information More information on safety devices is contained in chapter 4.5.

3.7 Safety signs

The diagram shows the locations of safety signs on the machine. The table lists the various safety signs used and their meanings.

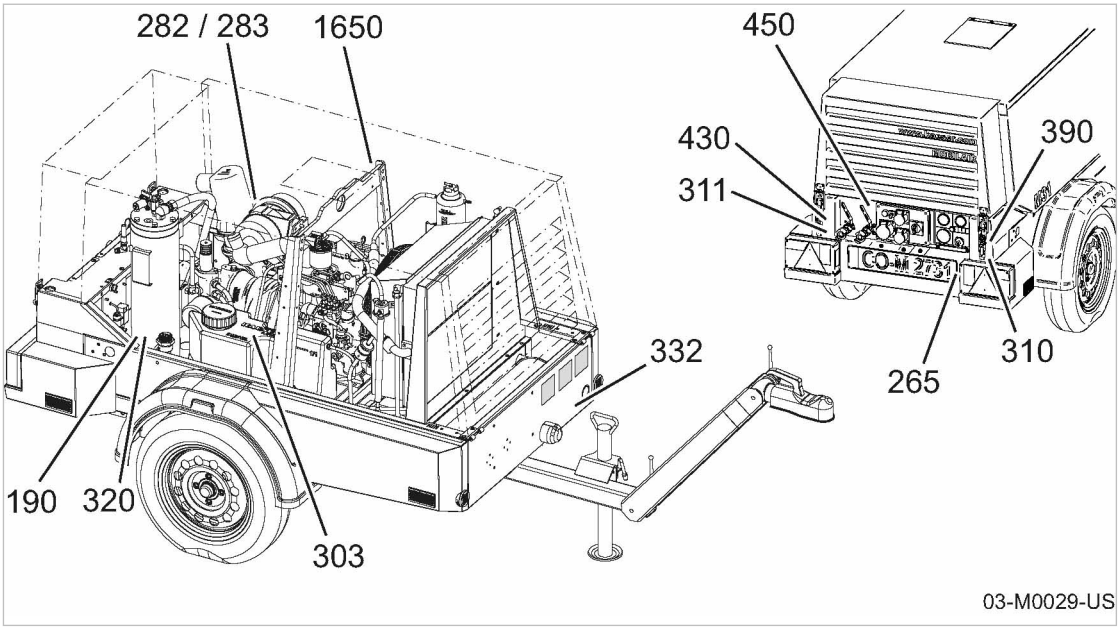

Fig. 2 Location of safety signs

Location	Symbol	Meaning
190(1)		Wrong cooling oil level! Risk of machine defects or rising oil consumption (oil content for pure air). ➢ Check cooling-oil level. ➢ Run the machine only with proper cooling-oil level.
265		Personal injury or damage to the machine due to incorrect operation! ➢ Read and understand the operating manual and all safety signs before switching on this machine.
282		Explosive hydrogen gas! Severe injury or death could result from exploding gas. ➢ Keep flames, sparks, and other sources of ignition away.
283		Battery contains acid! Severe injury results from contact with battery acid. ➢ Do not allow battery acid to contact eyes, skin, clothing, or painted surfaces. ➢ Do not attempt to jump-start if battery fluid is frozen. ➢ Bring temperature of battery up to at least 60°F before attempting to jump-start - it may explode!

(1) Location of safety signs within the machine,
(2) Only machines equipped with Option ga, gb,
(3) Only machines with Option dc

Location	Symbol	Meaning
303		Fire or explosion caused by refueling! Severe injury or death result from inflaming fuel. ➢ Use diesel fuel only. ➢ NEVER attempt to refuel the compressor while it is operating. ➢ Always replace fuel filter cap after refueling. ➢ Always wipe up fuel spills which may occur inside the compressor enclosure and allow the machine to ventilate.
310 311		Injury or damage from open machine! ➢ Operate the machine only when closed. ➢ Transport the machine only when closed.
320(1)		Loud noise and oil mist when the safety relief valve opens! Ear damage and burns can result. ➢ Wear ear protection and protective clothing. ➢ Close all maintenance doors and cover panels. ➢ Work carefully.
330 331		Hot surface can cause burns! ➢ Let the machine cool down. ➢ Work carefully. ➢ Wear protective clothing and gloves.
332 333		Hot surface can cause burns! ➢ Let the machine cool down. ➢ Work carefully. ➢ Wear protective clothing and gloves. ➢ Do not inhale dangerous gases.
430		Connect air hoses only in full compliance with OSHA standard 29 CFR 1926,302 (bX7)! The required safety devices should be tested in accordance with their manufacturer's recommendations to verify that they reduce pressure in case of hose failure and will not nuisance trip with the hose and tool combinations in use.
440		Compressed air quality! Injury and/or contamination can result from breathing compressed air. Contamination of food can result from using untreated compressed air for food processing. ➢ Never breathe untreated compressed air! ➢ Air from this compressor must meet OSHA 29 CFR1910.134 and FDA 21 CFR178.3570 standards, if used for breathing or food processing. Use proper compressed air treatment. ➢ Food grade coolant must be used for food processing.

(1) Location of safety signs within the machine,
(2) Only machines equipped with Option ga, gb,
(3) Only machines with Option dc

Location	Symbol	Meaning
450		Loud noise and compressed air blast! Damage to hearing and injury if ball valve is opened without a compressed air hose being connected. ➢ Connect a suitable compressed air hose. ➢ Open the ball valve.
600[1]		Pressure and spring force! Risk of fatal injury caused by loosening, opening, or dismantling valves or other components that are under pressure or heavy spring loading. ➢ Do not open or dismantle valves. ➢ Contact an authorized KAESER service representative in the event of a fault.
620 621		Pinch point hazard! ➢ Keep hands clear when opening the canopy.
850[2]		There is danger of fatal injury caused by contact with live components! ➢ Take protective measures.
1222[3]		Danger! Mortal danger from CO, CO_2, or toxic gas. ➢ Draw in only surrounding air of breathing quality.
		Danger! Danger to health from discharge of oily compressed air. ➢ Maintain surrounding air temperature between 34°F and 86°F. ➢ Check the oil indicator at least once a day.
1650[1]		Machine damage if switched while the engine is running! ➢ Use the «Battery isolating switch» only with the engine stopped. ➢ Do not use the «Battery isolating switch» as a main or emergency switch.

[1] Location of safety signs within the machine,
[2] Only machines equipped with Option ga, gb,
[3] Only machines with Option dc

Tab. 62 Safety signs

3.8 Noise control requirements



Tampering with the noise control system is prohibited!

Federal law prohibits the following acts or causing thereof:

- The removal or rendering inoperative by any persons, other than for purposes of maintenance, repair, or replacement, of any devices or element of design incorporated into any new compressor for the purpose of noise control prior to its sale or delivery to the ultimate purchaser or while it is in use; or
- the use of the compressor after such device or element of design has been removed or rendered inoperative by any person.

Among those acts included in the prohibition against tampering are the acts listed below:

- Removing any facing (doors, hood, service panels).
- Modifying the air inlet and outlet louvers.
- Modifying the air intake channels or hoses (if applicable).
- Modifying the air filter enclosure.
- Modifying the exhaust air silencer.
- Manipulating the machine's control and regulation system.

3.9 Option ga Generator operation

3.9.1 Comply with the protective measures against dangerous electric current

Protection against dangerous electric current is regulated by the "Low-voltage current generating installations" directive IEC 60364–5–551 (DIN VDE 0100–551).
The protective measures concerning "isolation, insulation monitoring and shut-down" are applied.
The generator is equipped with an automatic power supply cut-out with overcurrent release and insulation monitoring in accordance with this protective measure.

➢ Observe and follow the regulations concerning protection against dangerous electric current when using the generator.

3.9.2 Instructions for safe generator operation

Take note of the following to ensure the safe operation of the machine with a generator:

➢ Check correct function of the insulation monitoring device daily.

➢ Do not ground the neutral line (N) or connect it to the common protective ground/equipotential bonding (PE).

➢ Make sure the equipotential bonding to the ground is properly carried through (main power supply and machine through cable to consumer).

➢ If the generator feeds a network (TN network), let the network's protective measures remain effective or create another protective measure that is effective.

➢ Adjust the protective measures accordingly if the generator feeds a different network.

➢ Only a qualified electrician is allowed to carry out work on the generator or generator control box. The electrician is responsible for the effectiveness of the protective measures provided.

➢ Do not use the generator to feed the worksite distribution board.

➢ A generator with insulation monitoring must not be connected to another insulation monitoring device as these monitoring devices will then have counter effects.

➢ Ground fault current (F1) protection switches do not function in ungrounded networks (IT network such as provided by the generator). The isolation provided by the generator, however, renders an additional ground fault current protection switch unnecessary.

➢ Follow the regulations of the local electricity supply utility and obtain any necessary permits.
➢ When cleaning the inside of the machine, do not direct water or steam jets directly at the generator or terminal box.
➢ Check regularly that all electrical connections are tight and in proper condition.

3.9.3 Connecting extension cables

➢ When operating the generator, observe the regulations regarding the connection of extension cables.

Keep in mind:

- In IT networks, the total length of power cables may not exceed 820 ft (DIN VDE 0100, Part 728 / IEC 60364-5-551).
- Use at least H07RN-F cables to DIN VDE 0282 Part 4 (IEC 60245-4 / HD 22.4) as non-fixed extension cables.

3.9.4 Do not exceed the maximum supply system load

➢ When operating the generator, do not exceed the maximum supply system load due to connected electrical consumers.

Bear in mind:

- The power consumption values of simultaneous consumers are added.
- The maximum continuous power loading on the generator by the connected consumers is limited by the safety cut-out.

3.9.5 Perform regular generator inspections

To ensure a safe operation, the machine must be subjected to regular inspections.

Daily inspection prior to activating the device by authorized operating personnel:

➢ Insulation monitor function check.

Annual inspection by trained and authorized electrician:

➢ Inspect the generator and generator control cubicle for mechanical damages.
➢ Inspect the protective conductor.
➢ Measure the dielectric resistance.
➢ Measure the substitute leakage current.
➢ Test the generator functionality.
➢ Test the proper functioning of the generator fan and clean, if required.
➢ Clean the cooling air openings.
➢ Check and tighten the screw connections at the generator and the generator control cubicle.
➢ Check covers and power socket caps for damage and good sealing.
➢ Check the completeness of labeling and warning labels.

3.10 Emergency situations

3.10.1 Correct fire fighting

Suitable measures

Calm and prudent action can safe lives in the event of a fire.

- ➢ Keep calm.
- ➢ Give the alarm.
- ➢ Shut down the machine from the instrument panel if possible.
- ➢ Warn and move endangered personnel to safety.
- ➢ Help incapacitated persons.
- ➢ Close the doors.
- ➢ When trained accordingly: Attempt to extinguish the fire.

Extinguishing substances

- ➢ Suitable extinguishing media:
  Foam
  Carbon dioxide
  Sand or soil
- ➢ Unsuitable extinguishing media:
  Strong jet of water

3.10.2 Injury from handling operating fluids/materials

The following operating fluids/materials are in the machine:

- Fuel
- Lubricating oils
- Compressor cooling oil
- Engine coolant
- Battery electrolyte
- Tool lubricant (Option ea)
- Antifreeze (Option ba)

Eye contact:

Fuel, oil, and other fluids/materials can cause irritation.

- ➢ Rinse open eyes thoroughly for a few minutes under running water.
- ➢ Seek medical advice for persistent irritation.

Skin contact:

Fuel, oil, and other fluids/materials may irritate after prolonged contact.

- ➢ Wash thoroughly with skin cleaner, then with soap and water.
- ➢ Contaminated clothing should be intensively cleaned before reuse.

Inhalation:

Fuel and oil vapors impair breathing.

➢ Clear the respirator tract from fuel or oil vapor.

➢ Seek medical help if difficulty with respiration continues.

Ingestion:

➢ Wash out the mouth immediately.

➢ Do not induce vomiting.

➢ Seek medical aid.

3.11 Warranty

This operator manual contains no independent warranty commitment. Our general terms and conditions of business apply with regard to warranty.

A condition of our warranty is that the machine is used for the purpose for which it is intended under the conditions specified.
Due to the multitude applications for which the machine is suitable the obligation lies with the user to determine its suitability for his specific application.

In addition, we accept no warranty obligation for:

- the use of unsuitable parts or operating materials,
- unauthorized modifications,
- incorrect maintenance,
- incorrect repair.

Correct maintenance and repair includes the use of original spare parts and operating materials.

➢ Obtain confirmation from KAESER that your specific operating conditions are suitable.

3.11.1 Noise emissions warranty

The manufacturer warrants to the ultimate purchaser and each subsequent purchaser that this air compressor was designed, built, and equipped to conform, at the time of sale to the first retail purchaser, with all applicable American EPA noise control regulations.

This warranty is not limited to any particular part, component, or system of the air compressor.

Defects in the design, assembly, or in any part, component, or system of the compressor which, at the time of sale to the first retail purchaser, caused noise emissions to exceed Federal standards are covered by this warranty for the life of the air compressor.

3.12 Environmental protection

Operation of this machine may present an environmental hazard.

➢ Do not allow operating fluids/materials to escape into the environment or into the wastewater system!

- ➢ Store and dispose of operating fluids/materials and replaced parts in accordance with local environmental protection regulations.
- ➢ Observe relevant national regulations.
  This applies particularly to parts contaminated with fuel, oil, coolants and acids.



For the emission output of the corresponding engine class to always comply with applicable requirements, the drive engine must only be operated, used and maintained in accordance with instruction provided to the end user.

Intentional manipulation of the drive engine management system, improper operation or deficient maintenance are prohibited.

4 Design and Function

4.1 Bodywork

Bodywork is understood to be the exterior of the machine mounted on the chassis.

The bodywork has several functions when it is closed:

- Weather protection
- Sound insulation
- Guarding against touching
- Cooling air flow

Safe and reliable operation is only ensured when the bodywork is closed.

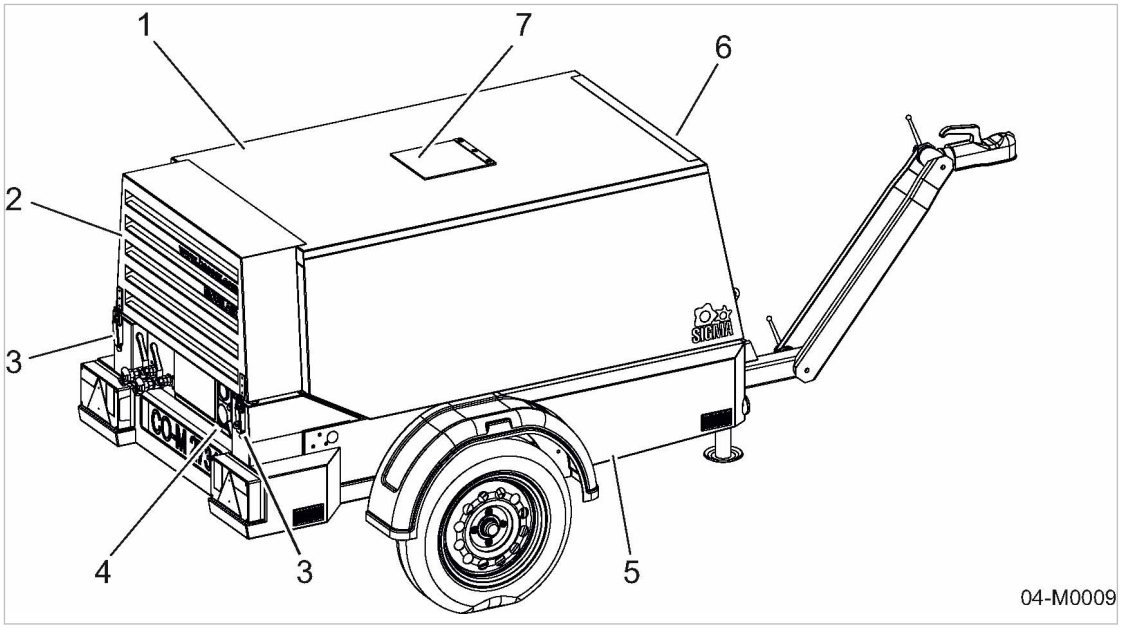

Fig. 3 Bodywork

[1]	Canopy	[5]	Lower body
[2]	Cooling air inlet	[6]	Cooling air outlet
[3]	Snap fastener	[7]	Cover for lifting eye
[4]	Instrument panel		

The canopy [1] can be opened when all the snap fasteners [3] are released.
The canopy opens independently.
Two gas-filled springs maintain the opened position of the canopy.

The bodywork is not suitable for the following uses:

- Walking on, standing, or sitting on.
- As resting place or storage for any kind of load.

4.2 Component identification

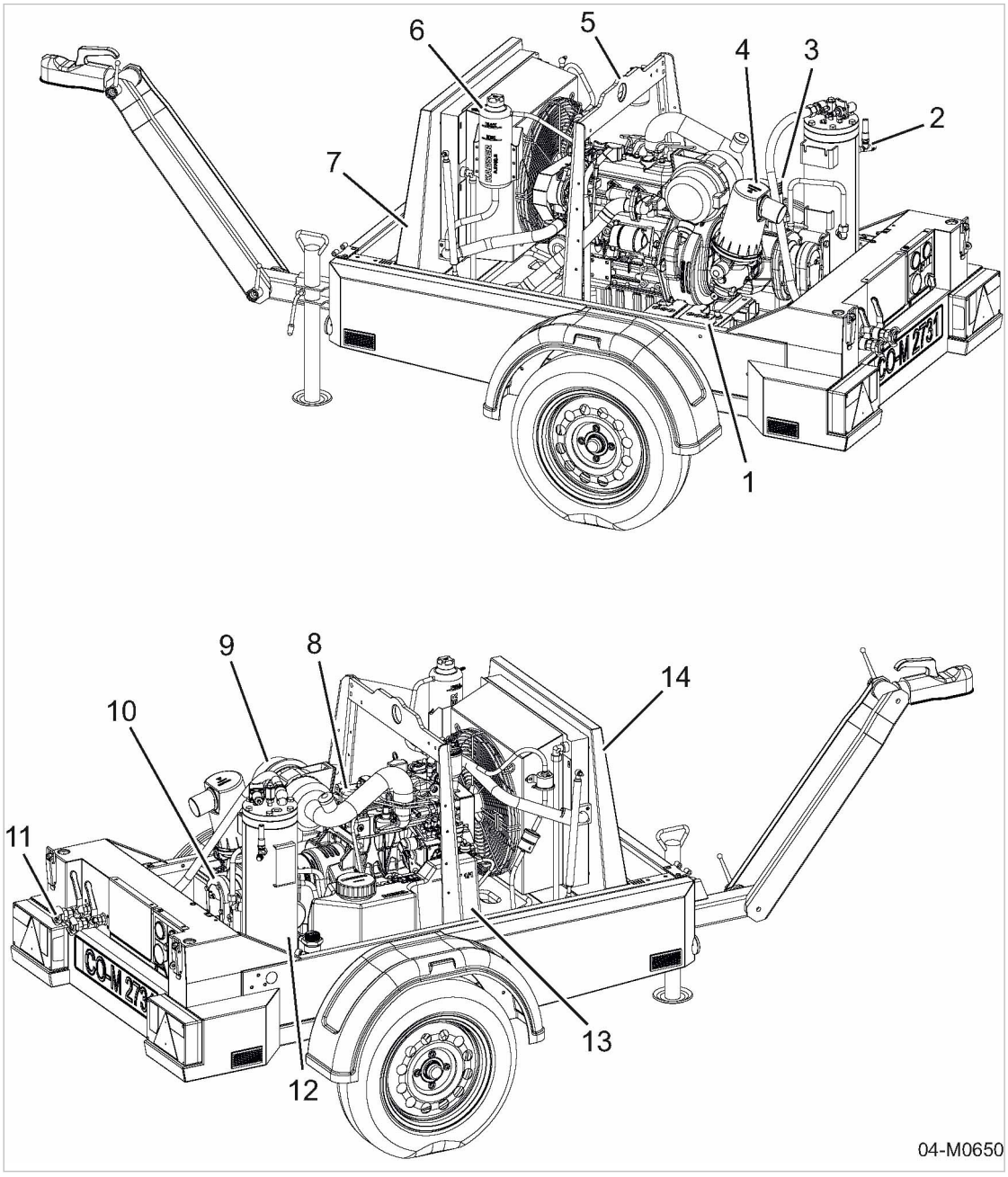

Fig. 4 Side view (enclosure removed)

1 Battery
2 Safety relief valve
3 Thermostatic valve
4 Compressor air filter
5 Lifting eye
6 Coolant expansion tank
7 Water cooler
8 Engine
9 Engine air filter
10 Airend
11 Compressed air outlet valve
12 Oil separator tank
13 Fuel tank
14 Oil cooler

4.3 Machine function

Machine function (without options)

Item numbers correspond to the pipe and instrument flow diagram (P&ID) in chapter 13.2.

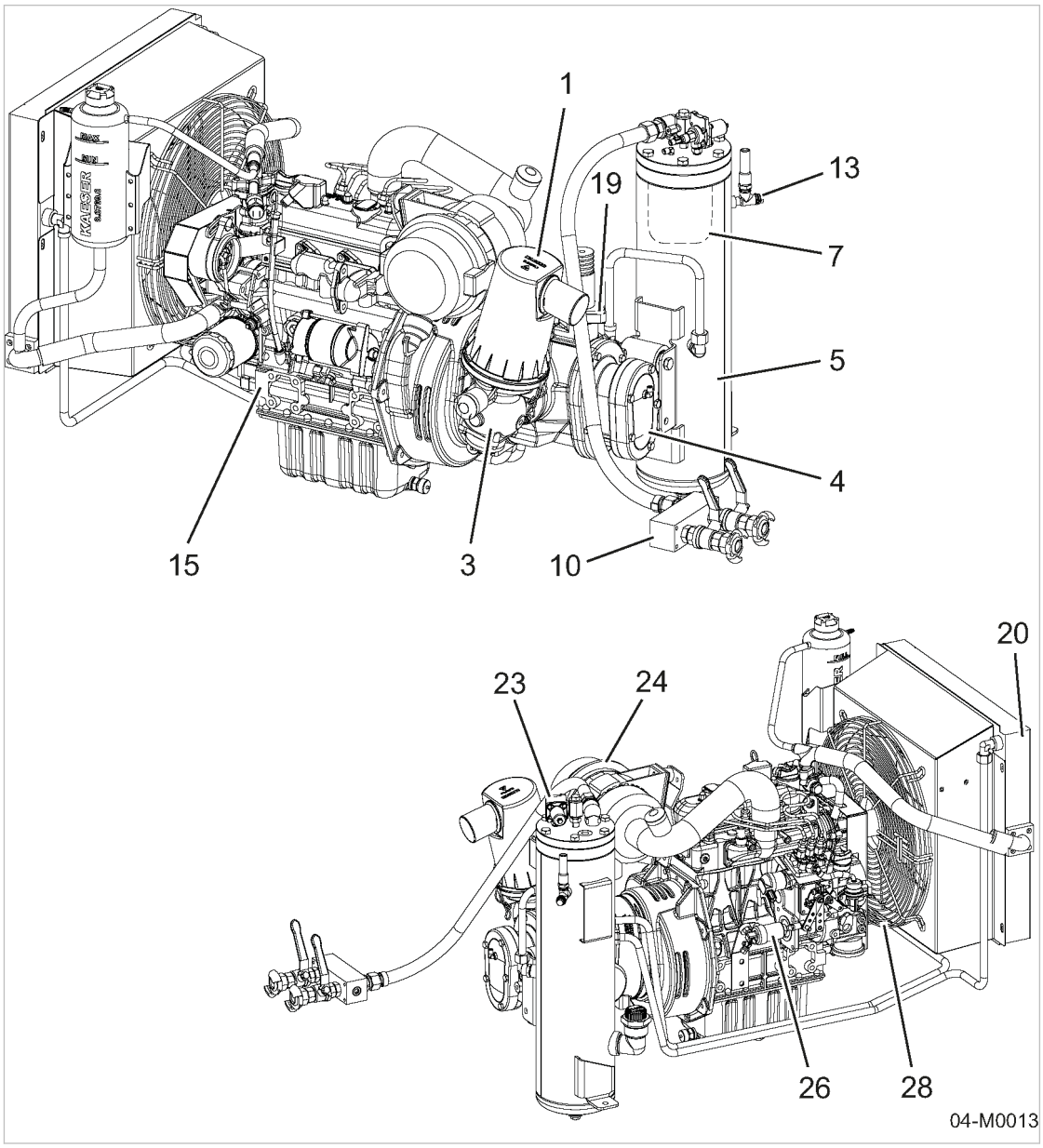

Fig. 5 Machine overview

1	Compressor air filter	15	Drive motor
3	Inlet valve	19	Thermostatic valve
4	Airend	20	Oil cooler
5	Oil separator tank	23	Proportional controller
7	Oil separator cartridge	24	Engine air filter
10	Air distributor	26	Engine speed adjusting piston
13	Safety relief valve	28	Fan

Ambient air is cleaned as it is drawn in through the filter 1.

The air is then compressed in the airend [4].

The airend is driven by an internal combustion engine [15].

Cooling oil is injected into the airend. It lubricates moving parts and forms a seal between the rotors themselves and between them and the airend casing. This direct cooling in the compression chamber ensures a very low airend discharge temperature.

Cooling oil recovered from the compressed air in the oil separator tank [5] gives up its heat in the oil cooler [20]. The oil then flows through the oil filter [21] and back to the point of injection. Air pressure within the machine keeps the oil circulating. A separate pump is not necessary.

A thermostatic valve [19] regulates and optimizes the cooling oil temperature. For machines with Anti-Frost Control, the ambient temperature is considered.

Compressed air, freed of cooling oil in the oil separator tank [5], flows through the minimum pressure nozzle into the compressed air distributor [10]. The minimum pressure nozzle ensures that there is always sufficient internal air pressure to maintain cooling oil circulation.

The cooling fan [28] ensures optimum cooling of all components within the enclosure.

4.4 Operating modes and control mode

4.4.1 Machine operating modes

The machine operates in the following modes:

- LOAD
  - The inlet valve is open.
  - The engine runs at maximum speed.
  - The airend delivers compressed air.
- MODULATING
  - With the help of a control valve (the proportional controller) the degree of opening of the inlet valve is steplessly varied in response to the air demand.
  - The load and fuel consumption of the engine rises and falls with the air demand.
  - The airend delivers compressed air.
- IDLE
  - The inlet valve is closed.
  - The control valve opens, allowing pressure in the oil separator tank to be applied to the inlet valve.
  - Compressed air then flows in a closed circuit through the airend, the oil separator tank and the control valve.
  - The pressure in the oil separator tank remains constant.
  - The engine runs at minimum speed.
- STANDSTILL (shut down)
  - The inlet valve closes.
  - The venting valve opens to depressurize the machine.
  - The engine stops.

4.4.2 MODULATING control

The control system regulates the volume of air generated to match the actual demand. The machine keeps the working pressure constant by varying the volume of compressed air delivered, thereby matching the air demand.

With the help of a mechanical control valve (the proportional controller), the opening and closing of the inlet valve is continuously varied in relation to the actual air demand. The airend provides compressed air for connected consumers.

This continuous delivery regulation minimizes fuel consumption of the engine. The load and fuel consumption of the engine rises and falls with the air demand.

4.5 Safety devices

4.5.1 Monitoring functions with shutdown

The following functions are monitored automatically.

- Engine oil pressure
- Coolant temperature
- Airend discharge temperature
- Engine alternator



The fuel stop device is activated when an alarm occurs. The engine comes to a stop and the venting valve releases pressure from the machine.

4.5.2 Further safety devices

The following safety devices are provided and may not be modified in any way.

- Pressure relief valve:
  This valve protects the system from excessive pressure. It is factory set.
- Enclosures and covers over moving parts and electrical connections:
  These protect against accidental contact.

4.6 Options

The options available for your machine are described below.

4.6.1 Option cb
Manually setting the output pressure

The option “Proportional controller with manual adjustment option” allows you to manually set the machine’s output pressure.

Discharge pressure is adjusted manually on the proportional controller. The output pressure can only be set lower than the maximum working pressure of the machine.

If the max. working pressure is exceeded as a result of improper manual setting of the proportional controller a second safety valve protects the pressure system from impermissible pressure rise. The second safety valve is located upstream of the compressed air outlet on the oil-free side of the compressed air system.

Further information — See chapter 8.2 for manually setting the machine’s output pressure.

4.6.2 Option da, dd, db
Air treatment options

For some applications, the compressed air generated by this machine must be treated before use.
The following describes the possible air treatment options that may be fitted to the machine.

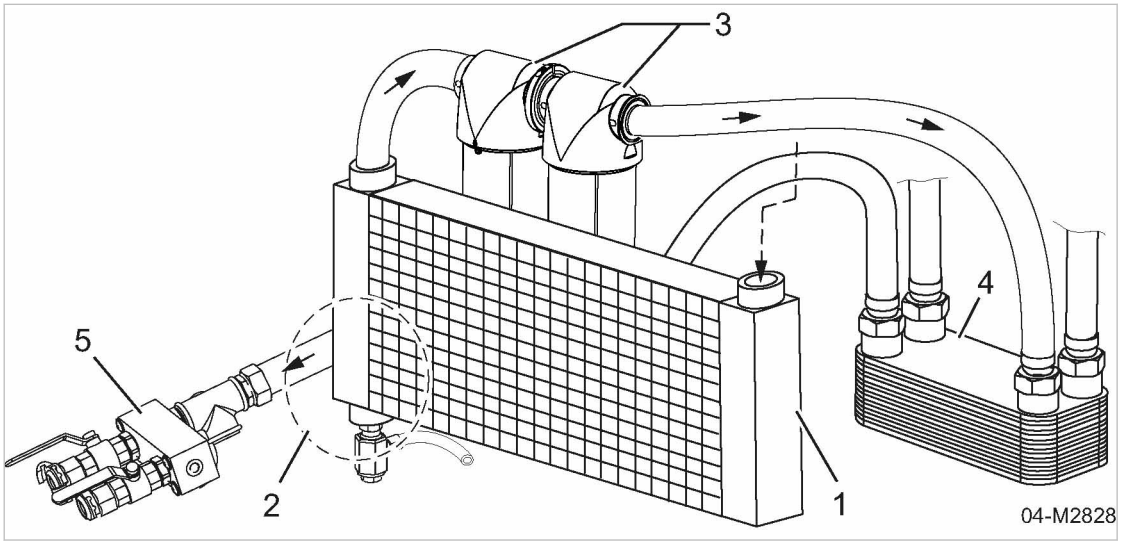

Fig. 6 Compressed air options

1 Compressed air aftercooler (Option da)
2 Compressed air water trap (option da)
3 Filter combination (option dd)
4 Heat exchanger (option db)
5 Air distributor

4.6.2.1 Option da
Compressed air aftercooler

The aftercooler lowers the compressed air temperature to only 5 K to 10 K above ambient. Most of the moisture carried in the air is removed in the aftercooler.

4.6.2.2 Option da
Compressed air water separator

Condensate accumulating during the air cooling process is separated, fed to the exhaust gas silencer and evaporated there.

4.6.2.3 Option dd
Filter combination

The dried compressed air passes through a pre-filter and micro-filter combination and emerges oil-free.

4.6.2.4 Option db
Heat exchanger

The oil/air heat exchanger is fed with hot compressor cooling oil that warms the outgoing moisture-reduced compressed air.
This warm, dry compressed air is ideal for sand blasting, for example.

4.6.2.5 Option ea
Tool lubricator

Compressed air containing lubricating oil is needed for the lubrication of certain air tools. The tool lubricator introduces a fine oil mist into the compressed air for this purpose.

The amount of oil in the compressed air is controlled by a metering valve on the lubricator:

- minimum oil to lubricate the tools and prevent corrosion,
- more oil for cleaning and to prevent wear in the tools.

The oil flow can be cut off completely by a shut-off valve.

The oil flow adjusts automatically to changes in air demand (one or more tools/consumers on line).

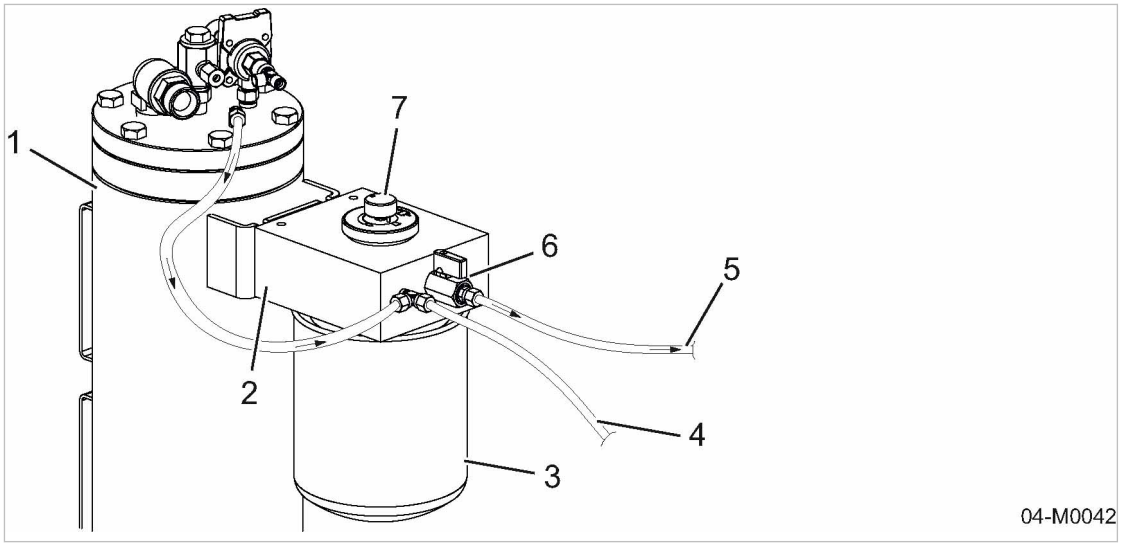

Fig. 7 Tool lubricator

1. Oil separator tank
2. Tool lubricator
3. Oil tank
4. Venting line
5. Air line with additional lubricant
6. Shut-off ball valve
7. Metering knob

Please note for air tools that should not be lubricated:

NOTICE

Lubrication with tool oil!

Air tools that must not be lubricated can be damaged.

➢ *Blow any residual oil out of the line before connecting such an air tool.*

4.6.3 Option ga, gb
Generator option

A generator is installed to provide a power supply to electrical consumers. The generator is driven from the drive engine by a drive belt. A tensioning device automatically ensures optimum belt tension.

Option ga **Design without FAD limitation**

Activating the generator does not influence the compressed air flow rate. The compressor delivers its full compressed air flow rate regardless of the generator being switched on or off.

Option gb **Design with FAD limitation**

When the generator is activated, the air inlet at the inlet valve is limited. The compressor runs with a reduced compressed air flow rate. As a result the engine is protected from overloading. For reduced compressed air flow rate, please refer to chapter 2.9.3.

4.6.3.1 Operating modes

The compressor works with the normal flow rate regulation and generates electrical power at the same time.

The generator can work in two modes. These are selected by the mode switch:

- Automatic cut-in
- Continuous load

Generator power supply disconnecting device	Mode selector switch	What is provided?
OFF	-	Compressed air
ON	Position 1 (automatic start mode)	Compressed air and electrical power
	Position 2 (continuous load)	Electrical power and compressed air

Tab. 63 Generator / compressor operation

Operating mode	Automatic cut-in	Continuous load
Switch position	Position 1	Position 2
Engine speed	Electrical power consumption > 100 VA: automatic maximum speed	Permanent maximum speed (engine under full load)
	Power consumption below minimum value: Engine run-on time of approximately 2 minutes at maximum speed	
Advantages	Fuel saving Constant oscillation between maximum and minimum speed avoided	Continuous generator power available without delay

Tab. 64 Generator operating modes

4.6.3.2 Operating controls

The switches, fuses and outlet sockets for electrical consumers are located on the generator control box. Individual consumers are connected only by these outlet sockets.

Generator control box 400V

Sockets and switches 400 V/3~/N/PE, 50 Hz generator, see illustration 8.

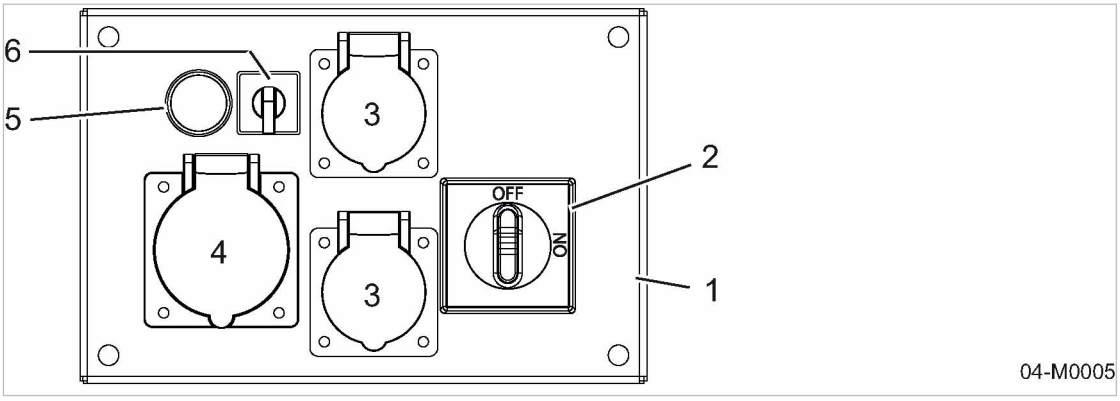

Fig. 8 Instrument panel, generator control box 400 V/3~/N/PE, 50 Hz

[1] Generator control box
[2] «Generator main switch»
[3] Power socket 230 V/1~/N/PE, 50 Hz
[4] Power socket 400 V/3~/N/PE, 50 Hz
[5] Test button «insulation monitor» with indicator light for ground short
[6] «Mode selector switch»

Generator control box 115V

Sockets and switches 115 V/1~/N/PE, 50 Hz, 32 A generator, see illustration 9.

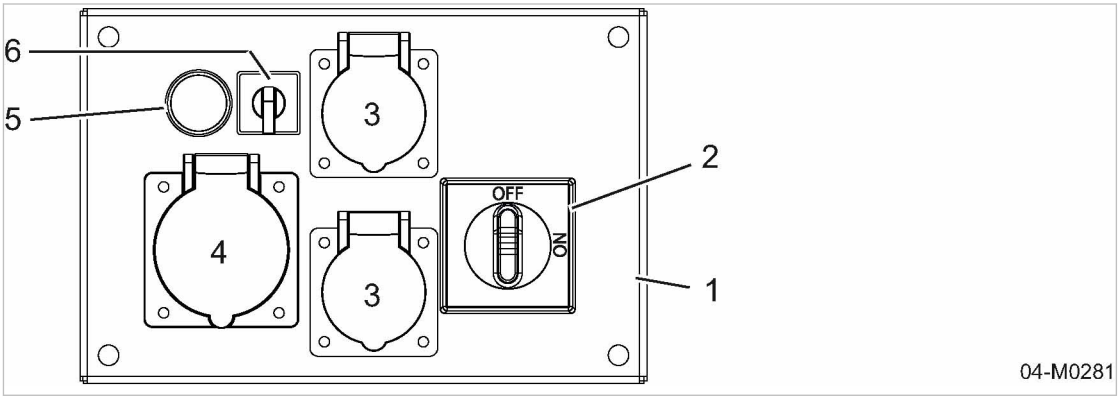

Fig. 9 Instrument panel, generator control box 115 V/1~/N/PE, 50 Hz, 32 A

[1] Generator control box
[2] «Generator main switch»
[3] Power socket 115 V/1~/N/PE, 50 Hz, 16 A
[4] Power socket 115 V/1~/N/PE, 50 Hz, 32 A
[5] Test button «insulation monitor» with indicator light for ground short
[6] «Mode selector switch»

4.6.4 Option ba
Low temperature equipment

The machine is fitted with low-temperature equipment for the operation in extremely low temperatures up to -13 °F. The electrical equipment starts the drive engine of the machine at ambient temperatures as low as 14 °F.

You can improve the cold-start behavior of the machine with the following options:

Option / option designation	Function
Coolant pre-heating / bb	Pre-heat the drive engine coolant.

Option / option designation	Function
Defroster / bc	Moisten components of the control and regulating system with anti-freeze.

Tab. 65 Low temperature equipment options

4.6.4.1 Option bb
Pre-heat the drive engine coolant

The engine coolant can be pre-heated in order to attain an improved cold-start behavior. An electric pre-heating device has been installed for this purpose. The heating element of the pre-heating device protrudes directly into the drive engine coolant.

The thermal output from the heating element into the coolant results in a slower circulation of the coolant. Resulting from the circulation the supplied heat is evenly distributed. The coolant of the drive engine and its direct surrounding significantly warm up above the local ambient temperature. A melting protection protects against overheating.

The ideal pre-heating time depends on the outside temperature. Approx. 3 hours of pre-heating time result in thermal balance. This means that subsequently supplied heat only serves to maintain the already existing temperature. The rest of the subsequently supplied heat is emitted to the surroundings.

Damages to the engine and electrical pre-heating device are precluded with pre-heating times lasting longer than 3 hours. Continuous operation of maximum 6 hours must be followed by a rest of approximately 3 hours. However, the unnecessary energy consumption should be prevented by shutting down the pre-heating device on time!

A flexible power cable has been included with the machine. To commission the pre-heating device you only need to connect the power cable to the machine’s connection and the user's power socket.

Further information See Fig. 10 for the position of the device connection.

4.6.4.2 Option bb
Device connection of coolant pre-heating on the machine

Option bb

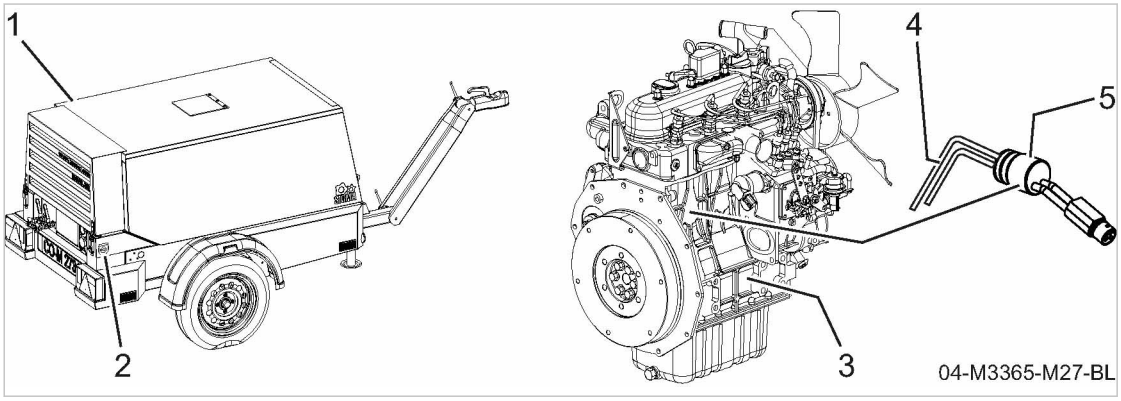

Fig. 10 Device connection on the machine

1 Machine
2 Device connection
3 Engine
4 Heating element
5 Pre-heating device

4.6.4.3 Option bc
Defroster

The control and regulating system of the machine can be moistened with antifreeze in order to attain an improved cold-start behavior. A defroster has been installed for this purpose. The defroster tank has been filled with antifreeze.

Antifreeze that is added to the air flow of the control and regulating system prevents the freezing of control lines, nozzles and valves. Adding antifreeze is solely required at ambient temperatures of below 32 °F. For this reason the defroster is fitted with a shut-off valve.

The correct switching position of the shut-off valve must be adjusted to the respective ambient temperatures.

Further information See Fig. 11 for the position of the shut-off valve.

4.6.4.4 Option bc
Frost protection

Option bc

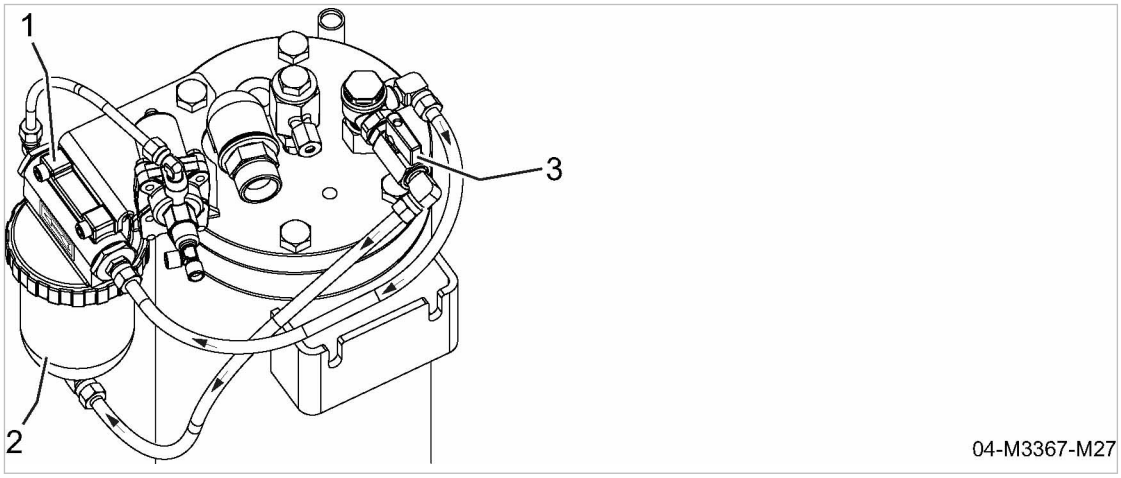

Fig. 11 Position of the defroster shut-off valve

1 Top of the defroster
2 Defroster tank
3 Shut-off valve

Further information See chapter 7.4.3 for antifreeze operation

4.6.5 Option Ia, Ib
Options for operating in fire hazard areas

4.6.5.1 Option Ia
Spark arrestor

A spark arrestor on the exhaust silencer is required when operating a diesel engine in a fire hazard area and in forestry and agricultural applications. In such applications, a spark may ignite flammable materials.

The spark arrestor prevents the exhaust silencer from emitting any glowing fuel residue.

4.6.5.2 Option lb
Engine air intake shut-off valve

Any flammable gas drawn into the diesel engine's air intake alters and enriches the controlled fuel/air mixture fed to the engine. This causes a sudden and uncontrolled increase in engine speed that can lead to serious mechanical damage. Without appropriate preventive measures, the engine and compressor can be destroyed. Explosion or fire are also possible.

When flammable gas is drawn into the engine, shutting off the fuel supply will not stop the engine right away. Only by shutting off the air intake can the engine be brought to an immediate stop.

The self-closing valve shuts off the engine air intake as soon as flammable gas is drawn in. This brings the engine to an immediate stop.

4.6.6 Option ne
Fuel de-watering filter option

A fuel de-watering filter is installed to remove water from the fuel to prevent lower quality fuel reaching the pump.

4.6.7 Option oe
Sealed floor pan option

The machine is fitted with a sealed floor pan.

In the event of a leak, all liquids required for the machine's operation are caught in the floor pan. Service openings in the floor pan are closed with plugs. These openings must be tightly re-closed after performing any cleaning work.

4.6.8 Option oa
Battery isolating switch option

The «battery isolating switch» disconnects the battery completely from the machine's electrical system (fire protection, battery discharge protection).

NOTICE

Danger of short circuit!
Damage to the machine electrical components is possible.

- ➢ *Use the «battery isolating switch» only when the machine is shut down.*
- ➢ *Do not use the «battery isolating switch» as a main or emergency switch.*

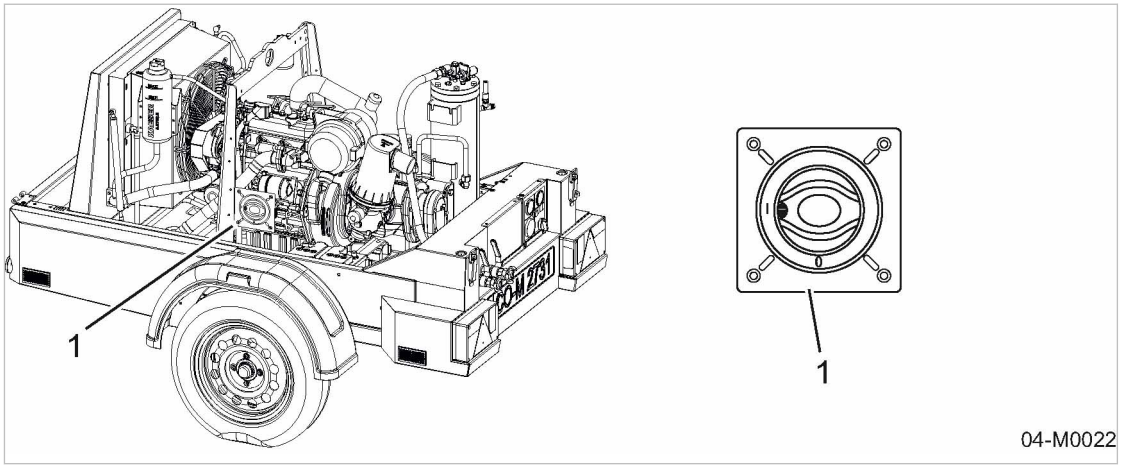

Fig. 12 Battery isolating switch

1 «Battery isolating switch»

4.6.9 Option ua
Hose reel option

The machine is provided with an extension hose to allow connection and operation of remote air tools. A hose reel is provided for safe storage of this hose.

4.6.10 Option sf
Anti-theft device option

The machine is fitted with a security chain as theft protection.
The supplied safety chain is stored in a container at the front of the machine.

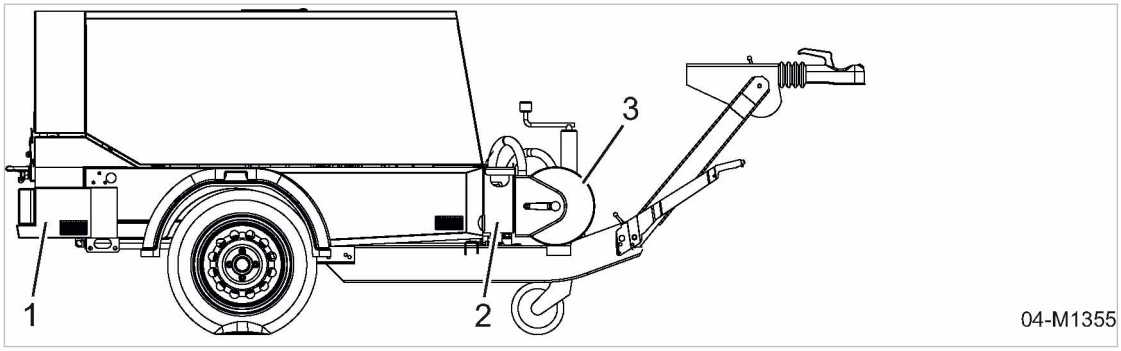

Fig. 13 Container for safety chain

1 Machine
2 Container for safety chain
3 Hose reel (option ua)

4.7 Frame design options for stationary machines

4.7.1 Option rw, rx
Chassis types of stationary machines

Option	Designation	Characteristics
rw	Skids	■ Frame designed as skid. ■ Use as stationary machine. ■ Mounted on truck/trailer platform.
rx	Frame	■ The mounting assembly is designed as a frame. ■ Use as stationary machine. ■ Mounted on truck/trailer platform.

Tab. 66 Stationary machines

Further information See chapter 13.3 for the dimensional drawings of machines with stationary frame designs.

4.8 Special version

4.8.1 Additional filtering of low-quality fuel

In order to avoid premature wear from low fuel quality, this machine's fuel system is equipped with a fuel prefilter at the inlet end of the fuel feed pump and a fuel filter on the discharge side of the fuel feed pump. Both fuel filters are equipped with separate water separators.

Fuel filtration:

- The fuel prefilter with an integrated water separator filters the fuel prior to inlet into the fuel feed pump and separates water concentrations contained in the fuel.
- The fuel filter with an integrated water separator clears the fuel prior on the discharge side of the fuel feed pump from the finest impurities and separates remaining water concentrations contained in the fuel.

The separated water concentrations are collected in the separator tanks of both fuel filters and can be manually drained from there.

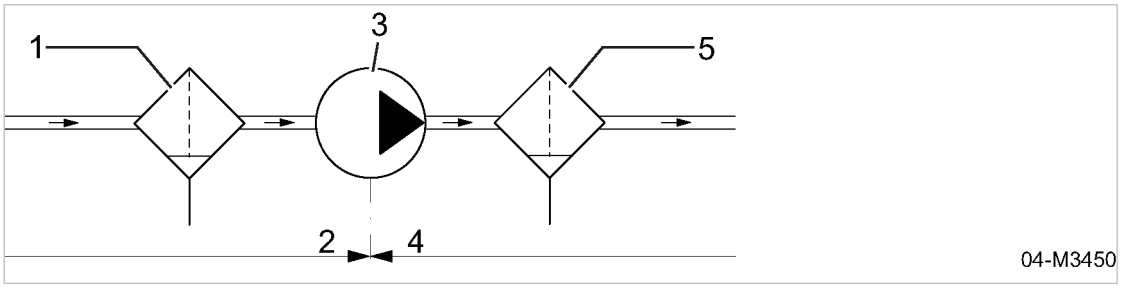

Fig. 14 Fuel filtration

[1] Fuel prefilter with integrated water separator
[2] Suction side of the fuel feed pump
[3] Fuel feed pump
[4] Discharge side of the fuel feed pump
[5] Fuel filter with integrated water separator

5 Installation and Operating Conditions

5.1 Ensuring safety

The conditions in which the machine is installed and operated have a decisive effect on safety.

Warning instructions are located before a potentially dangerous task.

⚠ Disregard of warning instructions can cause serious injuries!

Complying with safety notes

Disregard of safety notes can cause unforeseeable dangers!

- ➢ Strictly forbid fire, open flame and smoking.
- ➢ If welding is carried out on or near the machine, take adequate measures to prevent sparks or heat from igniting fuel or oil vapours or parts of the machine.
- ➢ Do not store inflammable material in the vicinity of the machine.
- ➢ The machine is not explosion-proof:
  Do not operate in areas in which specific requirements with regard to explosion protection are in force.
  For instance, the requirements of ATEX directive 2014/34/EC "Equipment and Protective Systems intended for use in Potentially Explosive Atmospheres".
- ➢ Keep suitable fire extinguishing agents ready for use.
- ➢ Ensure that required ambient conditions are maintained.

Required ambient conditions may be:

- Ambient temperature
- Air composition at the installation site:
  - clean with no damaging contaminants (e.g., dust, fibres, fine sand)
  - free of explosive or chemically unstable gases or vapours
  - free of acid/alkaline forming substances, particularly ammonia, chlorine or hydrogen sulphide.

5.2 Installation conditions

Precondition The ground must be level, firm and capable of bearing the weight of the machine.

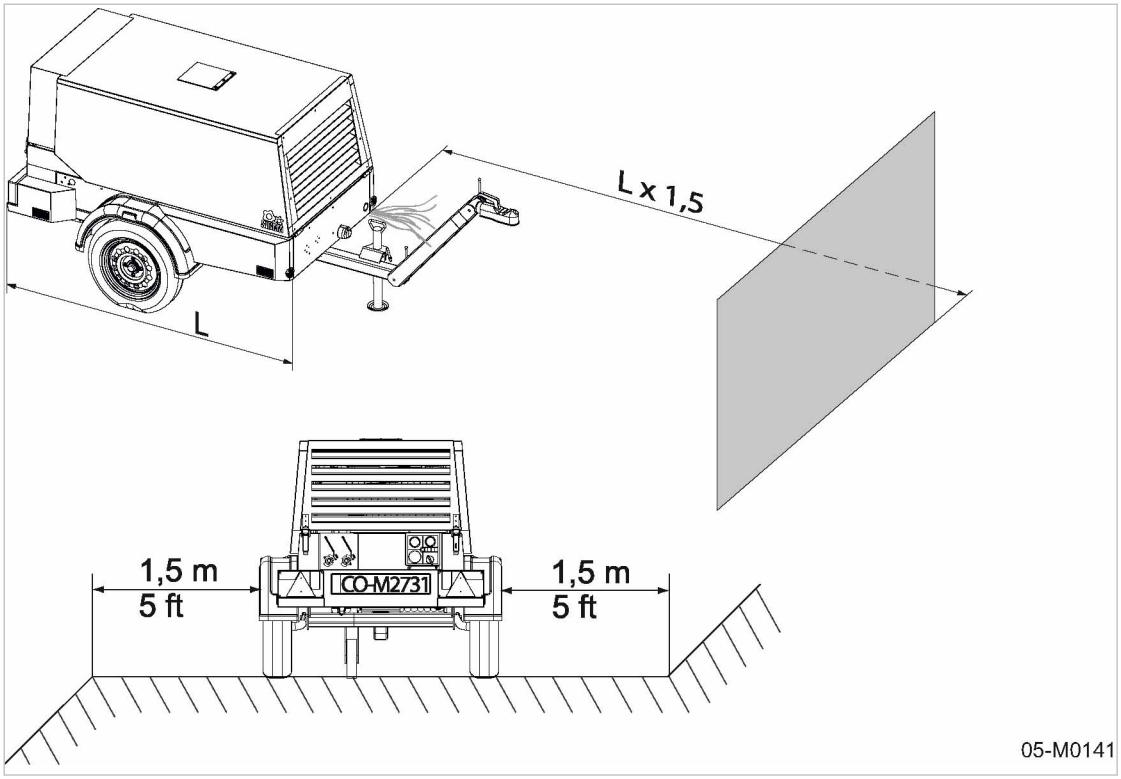

Fig. 15 Minimum distance from excavations, slopes, or walls

1. Keep sufficient distance (at least 5 feet) from the edges of excavations, slopes, and walls.
2. Ensure that the machine is as level as possible.

The machine can be temporarily operated on a slope of not more than 5°.

3. Ensure accessibility so that all work on the machine can be carried out without danger or hindrance.
4. **NOTICE** *Danger of burning from build up of heat and hot exhaust!*
   Insufficient distance from a wall may cause heat build up that could damage the machine.
   - ➢ *Do not position the machine directly against a wall.*
   - ➢ *Always ensure sufficient ventilation space around the machine.*
5. Position the machine as far as possible from any wall.
6. Ensure there is enough free space all round and above the machine.
7. Keep air inlet and outlet openings free of obstructions so that the cooling air can flow freely through the machine.
8. Position the machine in such a manner that:
   - wind does not blow into the cooling air outlet.
   - exhaust gases and heated cooling air can not be drawn into the compressor.

9. **NOTICE** *Ambient temperature too low!*
   Frozen condensate and highly viscous engine or compressor cooling oil can cause damage when starting the machine.
   - ➢ *Use winter grade engine oil.*
   - ➢ *Use low viscosity compressor cooling oil.*
   - ➢ *Allow the machine to warm up in IDLE (low speed), see chapter 8.2.3.*
10. At ambient temperatures below 32°F, follow the instructions in chapter 7.4.

5.3 Requirements for positioning on a lorry platform

For special applications, a stationary machine may be installed on the platform of a lorry. In this case, fasten the machine with bolt-down machine mounts on the load platform.

Special prerequisites for the installation on lorry platforms:

1. Follow the vehicle manufacturer's loading guidelines for safe operation and transportation.
2. Ensure sufficient clearance for access to the machine while fastened to the platform.
   - Ensure that operating activities are possible.
   - Ensure that monitoring activities are possible.
   - Ensure that maintenance activities are possible.
   - Ensure that an emergency shut-down is possible.
3. Ensure sufficient clearance for air supply to and exhaust lines from the machine while fastened to the platform.
   - Keep the intake air openings unobstructed.
   - Keep the exhaust air openings unobstructed.
4. Ensure sufficient clearance for the exhaust gas conduit from the machine while fastened to the platform.
   - Keep the exhaust gas opening unobstructed.
   - Ensure sufficient distance and discharge option for escaping exhaust gas.
5. If required, attach a hazardous goods label at the machine.

Further information For the installation of the bolt-down machine mounts, see chapter 6.3.2.

6 Installation

6.1 Ensuring safety

Follow the instructions below for safe installation.

Warning instructions are located before a potentially dangerous task.

⚠ Disregard of warning instructions can cause serious injuries!

Complying with safety warnings

Disregard of safety warnings can cause unforeseeable dangers!

- ➢ Follow the instructions in chapter 3 “Safety and Responsibility”.
- ➢ Installation work may only be carried out by authorized personnel.

Further information

Details of authorized personnel are found in chapter 3.4.2.

Details of dangers and their avoidance are found in chapter 3.5.

6.2 Reporting Transport Damage

1. Check the machine for visible and hidden transport damage.
2. Inform the carrier and the manufacturer in writing of any damage found.

6.3 Installing the options

- ➢ Comply with all instructions!

6.3.1 Perform regular maintenance on the chassis:

- ➢ See the separate document "Chassis Operating Manual" for instructions regarding maintenance on the chassis.

6.3.2 Option rx, rw Fastening a stationary machine

When stationary machines are ordered with bolt-down machine mounts (anti-vibration mounts), a complete set of these bolt-down machine mounts are provided in a separate cardboard box. If the machine mounts have not been purchased with the machine, you may separately order them from KAESER.

Use bolt-down machine mounts to correctly fasten the stationary machine on the installation surface. These machine mounts, designed for the overall machine weight, also ensure a vibration-reducing positioning of the machine.

You may use machine mounts with or without rubber pads. When using machine mounts with rubber pads, take the changed height of the machine into consideration.

Bores for the fastening bolts of the machine mounts are provided in the frame or skid. See the corresponding dimensional drawing in chapter13.3 to see the precise distances of the bores for your machine.

Select the fastening bolts according to the properties of the installation surface.

Material
Bolt-down machine mounts (anti-vibration mounts)
Fixing screws
Wrench

Precondition
The machine is switched off.

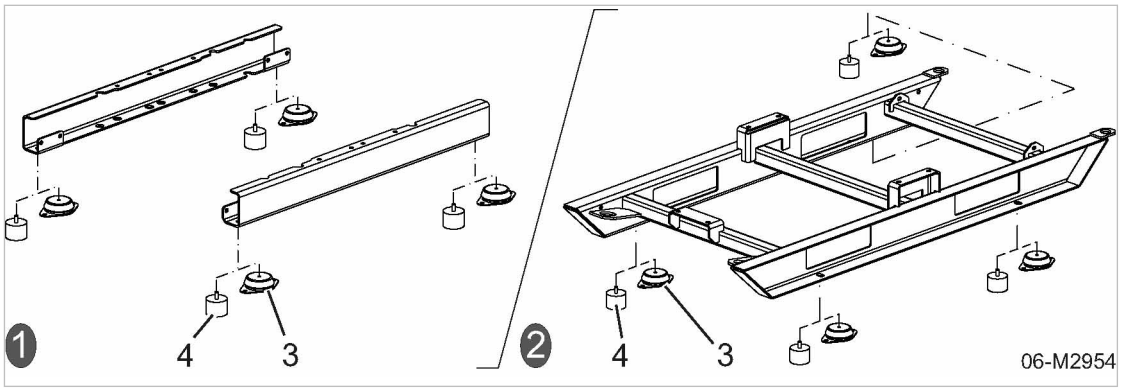

Fig. 16 Fitting the Mounting Pads

[1] Frame (Option rx)
[2] Skid (Option rw)
[3] Machine mount
[4] Rubber pad

1. Lift the machine with appropriate hoisting gear.
2. Place square timbers under the frame or skid.
3. Set the machine down carefully.
4. Bolt all machine mounts to the frame or skid.
5. Lift the machine and position it on a suitable surface as specified in chapter5.2, Installation conditions.
6. Use appropriate fastening bolts for attaching the machine mounts.

7 Initial Start-up

7.1 Ensuring safety

Follow the instructions below for safe commissioning of the machine.
Warning instructions are located before a potentially dangerous task.



Disregard of warning instructions can cause serious injuries!

Complying with safety warnings

Disregard of safety warnings can cause unforeseeable dangers!

- ➢ Follow the instructions in chapter 3 “Safety and Responsibility”.
- ➢ Commissioning work may only be carried out by authorized personnel!
- ➢ Make sure that no one is working on the machine.
- ➢ Ensure that all service doors and panels are locked.

Further information

Details of authorized personnel are found in chapter 3.4.2.
Details of dangers and their avoidance are found in chapter 3.5.

7.2 Before initial start-up (or recommissioning)

Incorrect or improper commissioning can cause injury to persons and damage to the machine.

7.2.1 Instructions to be observed before commissioning or recommissioning



The initial start-up of every machine takes place at the factory. Every machine is also given a trial run and passes a careful check.

- ➢ Commissioning may only be carried out by authorized installation and service personnel who have been trained on this machine.
- ➢ Remove all packing materials on and in the machine.
- ➢ Observe the machine during the first few hours of operation to ensure that it is operating correctly.

7.2.2 Special measures for recommissioning following storage or decommissioning

➢ Carry out the following tasks every time the machine is recommissioned following longer periods of storage/decommissioning:

Storage/ decommissioning periods longer than:	Measure
5 months	**Drive engine:** ➢ Take note of the information sign regarding long-term storage/decommissioning. ➢ Check whether preservation measures have been carried out on the drive engine. ➢ If preservation measures have been carried out, arrange for the entire oil reserve in the drive engine to be removed by a specialist workshop. ➢ Check the engine oil filter. ➢ Refill with fresh engine oil. ➢ Check the engine oil level. ➢ Remove desiccant from the engine air filter. ➢ Check the engine air filter. ➢ Check the engine coolant level. ➢ Check the battery charge level(s). ➢ Reconnect the battery (batteries). ➢ Check all fuel hoses for leaks, loose connections, chafe marks and damage. ➢ Check all pressure hoses on the drive engine (engine oil, coolant, charge air) for leaks, loose connections, chafe marks and damage.
	Compressor: ➢ Remove desiccant from the compressor air filter. ➢ Check the compressor air filter. ➢ Check the compressor oil filter. ➢ Check the cooling oil level. ➢ Check all pressure hoses/lines on the compressor (cooling oil, compressed air, control air, condensate) for leaks, loose connections, chafe marks and damage.
	Bodywork: ➢ Clean the bodywork with a grease- and dirt-removing agent.
36 months	**Technical condition:** ➢ Arrange for the overall technical condition to be checked by an authorised KAESER SERVICE agent.

Tab. 67 Measures for recommissioning the machine following storage or decommissioning

7.3 Checking installation and operating conditions

➢ Check and confirm all the items in the checklist before starting the machine.

Task	See chapter	Confirmed?
➢ Are the operators completely familiar with safety regulations?	—	
➢ Have all the positioning conditions been fulfilled?	5	
➢ Is there sufficient cooling oil in the separator tank?	10.4.1	
➢ Is the maintenance indicator on the compressor air filter OK?	10.4.7	
➢ Is there sufficient oil in the engine?	10.3.4	
➢ Is the maintenance indicator on the drive engine air filter OK?	10.3.2	
➢ Is there sufficient coolant in the coolant expansion tank?	10.3.1	
➢ Is there sufficient fuel in the fuel tank?	—	
➢ Is there sufficient tool oil in the tool lubricator? (option ea, ec)	10.10.1	
➢ Is there enough antifreeze in the frost protector? (Option ba)	10.10.5	
➢ Canopy closed?	—	
➢ Are the access doors closed?	—	
➢ Are all body panels in place?	—	

Tab. 68 Checking installation and operating conditions

7.4 Low-temperature operation

Cold ambient temperatures during seasonal winter operation require adjustment of operating fluids, components and warming-up of the machine.

- Adjusting the operating fluids.
  - Use winter-grade engine oil
  - Use low viscosity cooling oil for the compressor
  - Use winter-grade diesel fuel
- Adjusting the components
  - Use stronger battery
  - Use short compressed air hoses
- Let the machine warm up
  - Carry out specific warming-up when temperatures are low
- Use low temperature equipment (option ba)
  - Pre-heat the engine coolant
  - Use antifreeze for the control and regulating system

➢ Follow all instructions!

Result The carried out adjustments increase the service life of your machine.

7.4.1 Carrying out warming-up when temperatures are low

1. **NOTICE** *Low temperatures disturb the pneumatic control of the machine!*
   Damage to control and regulating devices may be caused by ice particles.
   ➢ *Warm-up machine by letting it run in IDLE mode.*
2. Open the compressed air outlet valves at the compressed air outlet.
3. Start the machine.
4. Run the machine in unloaded state with opened air compressed air outlet valves until it has warmed up.
5. Wait until the airend discharge temperature of +86 °F has been reached.
6. Check on the *remote contact thermometer* that the airend discharge temperature of +86 °F has been reached.

7.4.2 Starting assistance

The machine's electrical equipment is designed for starting at ambient temperatures as low as 14 °F.

If the machine's starter battery is discharged, it can be started with the battery of another vehicle or engine-driven machine.

Material Jumper cables

Precondition The machine is disconnected from the towing vehicle and safely parked.

⚠ WARNING
Fire and explosion hazard.
High-circuit currents caused by short-circuited battery. A damaged battery can catch fire or explode.
Battery casing may crack and allow acidic fluid to spray out.
➢ *Observe the instructions provided with the battery jumper cables.*
➢ *Do not connect the battery jumper cables to the negative pole of the discharged battery or to the bodywork of the machine.*
➢ *Work with caution.*

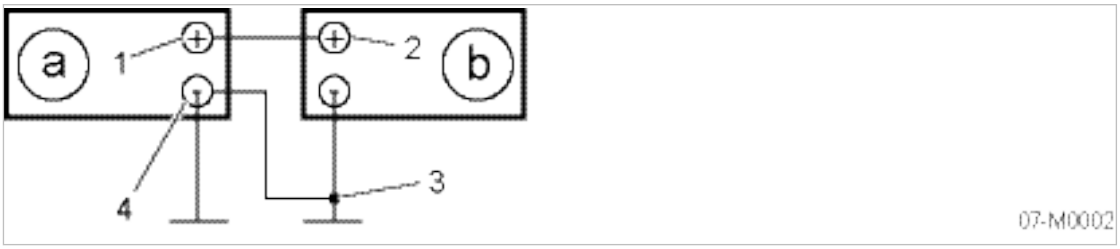

Fig. 17 Jumper cable connection diagram

[a] Assisting vehicle battery (external donor battery)
[b] Engine battery (receiving battery)
[1] Positive (+) terminal starting assistance
[2] Positive (+) terminal of the machine battery
[3] Bare metal point on the engine block (ground)
[4] Negative (-) terminal of assisting vehicle battery

Complying with safety instructions

1. **⚠ WARNING** *Fault in starting aid process!*
   - ➢ *Connect batteries of the same voltage only.*
   - ➢ *Ensure that machine and assisting vehicle do not touch.*
   - ➢ *Switch off all consumers prior to connecting and disconnecting the batteries.*
   - ➢ *Only use battery jumper cables of sufficient diameter and with insulated terminal clamps.*
   - ➢ *Observe the instructions provided with the battery jumper cables.*
   - ➢ *Keep jumper cables away from rotating parts.*
   - ➢ *Avoid short-circuits due to incorrect poling and/or bridging with tools.*
   - ➢ *Do not bend over the battery when attaching jumper cables.*
   - ➢ *Do not attempt to start the machine if its battery is frozen. Allow the battery to thaw first!*
   - ➢ *Do not try to start the machine with a boost charger.*
2. Comply with the safety instruction shown when using starting aids and starter batteries.

Preparations

1. Park the assisting vehicle in close distance to the engine, without their bodywork touching each other.
2. Stop the engine of the assisting vehicle.
3. Open the accesses to the batteries (remove maintenance panels/bonnet and pole caps).
4. Switch off all power consumers.

Connecting the battery jumper cables

1. Connect the positive terminals [2] and [1].
2. **⚠ DANGER** *Explosion hazard!*
   A spark may ignite an explosive gas mixture.
   - ➢ *Do not, under any circumstances, connect the negative pole of the assisting machine to the negative pole of the battery in the machine to be started.*
     This can cause sparks when connecting and disconnecting.
   - ➢ *Work with caution.*
3. Connect the minus pole of the assisting battery [4] to a bare metal point on the machine's drive engine [3] to be started (as far away from the battery as possible).

Starting the engine

1. Start the engine of the assisting vehicle and run at high speed.
2. Start the engine of the machine.

Let the two engines run for approximately 10-15 minutes after the successful start.
This is important, in particular for fully discharged batteries. They will pick up little current only in the beginning and have a high internal resistance. Any voltage peaks occurring in the engine generator in this state can be attenuated only by the battery of the assisting vehicle. The engine electronics of the machine, in particular, is sensitive to high voltages and could be damaged easily.

Disconnecting the battery jumper cables

1. Stop the engine of the assisting vehicle.

2. Disconnect the jumper cables in the reverse order, first negative (-) then positive (+).
3. Place the pole caps.
4. Close the maintenance panels and/or bonnet.

A stop of the machine's engine as soon as the cables are disconnected could indicate major damage (e.g. to the engine generator or battery) which must repaired by a specialized workshop.

7.4.3 Starting up low-temperature equipment

➢ Determine which low temperature equipment is fitted to your machine.

7.4.3.1 Option bb
Pre-heat the drive engine coolant

In order to improve the cold-start behavior your machine is equipped with an electric coolant pre-heating device. The corresponding power cable has been included with the machine.

See Fig. 18 for the position of the device connection on the machine.

Option bb

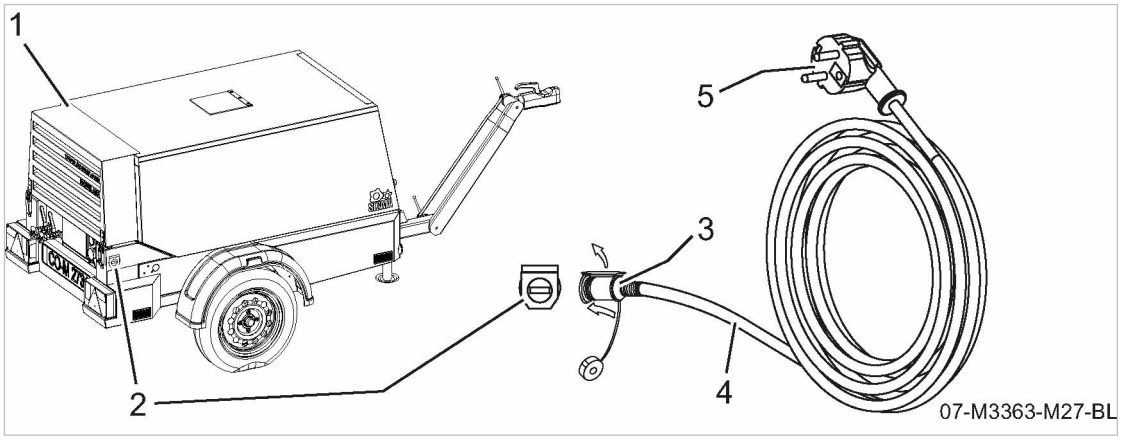

Fig. 18 Coolant pre-heating

[1] Bodywork
[2] Connection for the coolant pre-heater
[3] Unit plug
[4] Power cable
[5] Power plug

1. **⚠ DANGER** *Danger of fatal injury from electric shock*
   - ➢ *Connect power plug of power cable to user's power socket only.*
   - ➢ *Have the coolant pre-heating and associated power cable checked according to the maintenance schedule.*
2. Open the enclosure.
3. Remove the power cable from the machine's interior.
4. Close the enclosure.
5. Connect the unit plug to the connection of the machine.
6. Connect the power plug to the user's power outlet.
   The heating element of the pre-heating device warms up the drive engine's coolant.
7. Note the pre-heating time of approx. 3 hours.

7.4.3.2 Option bc
Checking the shut-off valve of the defroster

When the ambient temperatures are constantly below 32°F (winter operation), individual components of the control system must be moistened with anti-freeze. A defroster has been installed to meet this requirement. Adding antifreeze to the air flow of the control system for a short time only then makes sense when the machine is decommissioned daily.

The heat generated by the machine prevents individual components of the control system from freezing up during operation. In order to prevent unnecessary use of antifreeze during the machine's operation, a shut-off valve blocks the constant addition of antifreeze to the air flow of the control system.

See Fig. 19 for the switching positions of the corresponding shut-off valve.

The correct switching position for summer operation may vary depending on the model. Please see Table 69 for the correct switching position of your machine.

Option bc

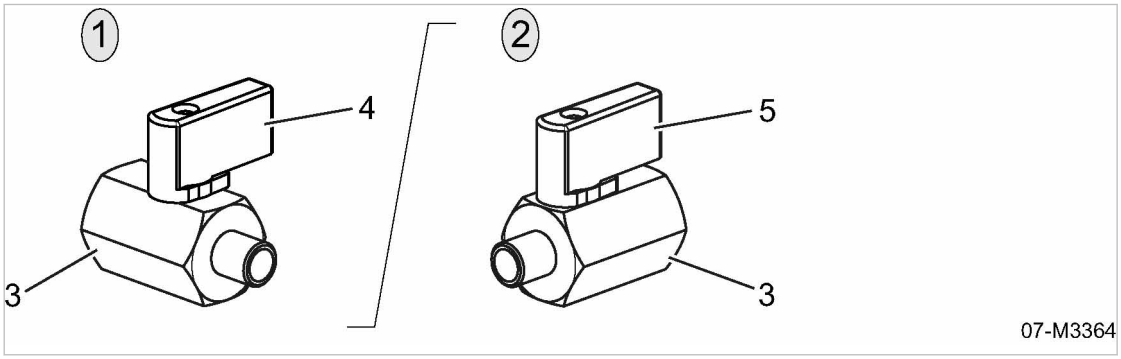

Fig. 19 Shut-off valve of switching position

1. Shut-off valve closed
2. Open shut-off valve
3. Shut-off valve
4. The lever is positioned across the flow direction
5. The lever is positioned in the flow direction

Precondition The machine is switched off and cooled down.

Air consumers are disconnected,
the outlet valves are open,
the machine is fully vented, the pressure gauge reads 0 psig!

The negative cable to the battery is disconnected.

1. Check the level of the antifreeze in the defroster tank, see chapter 10.10.5.
2. Check the position of the shut-off valve during the daily start-up of the machine.

Instructions	Switching position for summer operation	Confirmed
Open the shut-off valve	—	
Close the shut-off valve	X	

X ≙ applicable, — ≙ not applicable

Tab. 69 Block antifreeze

3. If necessary, close the shut-off valve and keep it close.

   The constant addition to the air flow of the control system is prevented during operation with antifreeze.

7.5 Activating the generator

The generator can be operated without electrical grounding.
Test the insulation monitor daily with the engine running before activating the generator.

➢ Test daily.

7.5.1 Generator control box 400V with insulation monitoring

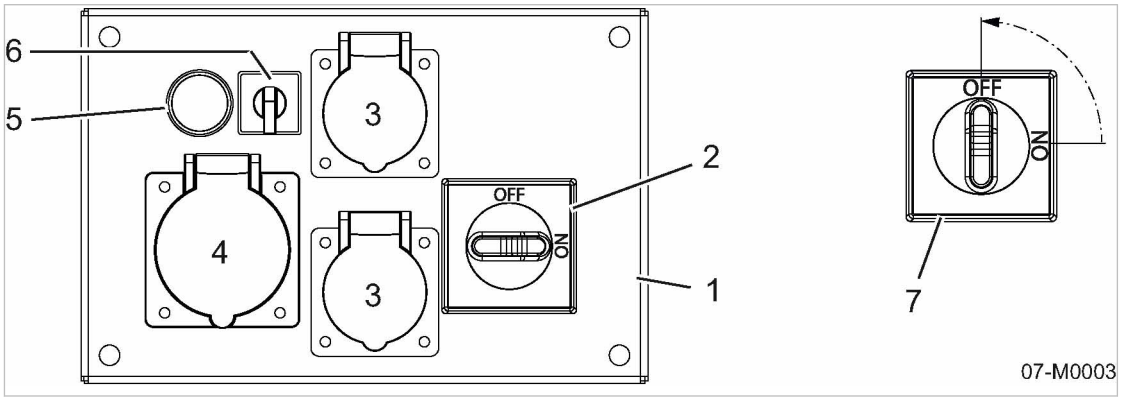

Fig. 20 Insulation monitoring – 400V, 3-phase generator

[1] Generator control box
[2] «Main switch»
[3] Single-phase AC power sockets
[4] 3-phase AC power sockets
[5] Test button «insulation monitor» with indicator light for ground short
[6] «Mode selection switch»
[7] Position «main switch» after the main circuit breaker has been activated

➢ Please note the positions of «insulation monitor» and «main switch» test buttons.

7.5.2 Generator control box 115V with insulation monitoring

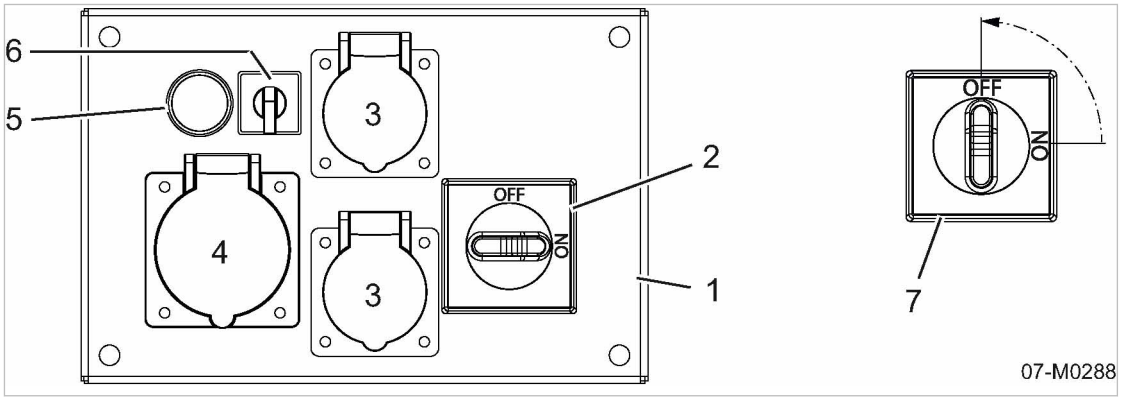

Fig. 21 Insulation monitoring - 115V, single-phase generator

[1] Generator control box
[2] «Main switch»
[3] Single phase AC power socket, 16 A
[4] Single phase AC power socket, 32 A
[5] Test button «insulation monitor» with indicator light for ground short
[6] «Mode selector switch»
[7] Position «main switch» after the main circuit breaker has been activated

➢ Please note the positions of «insulation monitor» and «main switch» test buttons.

7.5.3 Testing the insulation monitor

1. Starting the machine
2. **⚠ DANGER** *Risk of fatal injury caused by contact with live components!*
   - ➢ *The generator may only be used if the «circuit breaker» («mains circuit breaker») has tripped during the test!*
3. Check the insulation monitor according to instructions:

Checking instructions are given on the label stuck on the generator control box.

DANGER!
Electrical power
Risk of fatal injury caused by contact with live components!
▸ Test the «mains circuit breaker» each day while the machine is running.
▸ The generator may only be operated if the mains circuit breaker is functioning correctly.
Checking the «safety cut-out»:
➢ Switch on the «mains circuit breaker» for the generator.
➢ Press and hold the «test button» [5] for 3 seconds.
The «mains circuit breaker» trips out.
Problem: The «mains circuit breaker » does not trip.
➢ Shut down the generator and call KAESER SERVICE.

Tab. 70 Test instructions for a generator with a ground leak detection device.

4. Turn the «starter switch» of the machine to the "0" position
   Warning lamp extinguishes.

8 Operation

8.1 Ensuring safety

Follow the instructions below for safe operation.
Warning instructions are located before a potentially dangerous task.

⚠ Disregard of warning instructions can cause serious injuries!

Complying with safety warnings

Disregard of safety warnings can cause unforeseeable dangers!

- ➢ Follow the instructions in chapter 3 “Safety and Responsibility”.
- ➢ Make sure that no one is working on the machine.
- ➢ Ensure that all service doors and panels are closed and secured.

Preventing accidental contact

Intensely heated, rotating, or electrically-live components can cause severe injuries.

- ➢ Ensure that all doors, canopy and panels are closed.
- ➢ Do not carry out any checks or settings while the machine is running.
- ➢ Shut down the machine before opening any doors/canopy.

When working on live components

Touching voltage-carrying components can result in electric shocks, burns or death.

- ➢ Work on electrical equipment may only be carried out by authorized electricians.

Safe working with compressed air tools and hoses

Open pressurized compressed air hoses move erratically and can cause serious injury to people.

- ➢ Pressurize compressed air hoses only after the tool has been connected.
- ➢ Do not pressurize open compressed air hoses.
- ➢ Detach compressed air hoses only after the hose has been purged of compressed air.
- ➢ At working pressures >100 psig, compressed air hoses should be secured by a cable to their respective outlet valves.

Condensate formation in compressed air hoses

Use the shortest possible compressed air hoses to minimize the temperature difference between the machine's compressed air outlet and the air tool. The hose length represents a cooling section. With increasing cooling, the compressed air gives off moisture capable of damaging the air tool.

- ➢ Use short compressed air hoses.

Condensate formation in compressed air receivers

Compressed air stored in a containers will cool down. The compressed air precipitates moisture that collects at the container's bottom. Corrosion may damage the container.

➢ Regularly drain the condensate.

Further information Details of authorized personnel are found in chapter 3.4.2.
Details of dangers and their avoidance are found in chapter 3.5.

8.2 Starting up and shutting down

Precondition No personnel are working on the machine.

NOTICE

Serious damage to the engine from cold-start fluid!
Cold-start fluids, such as ether or other starting sprays, can cause serious engine damage.

➢ *Do not use cold-start fluids.*

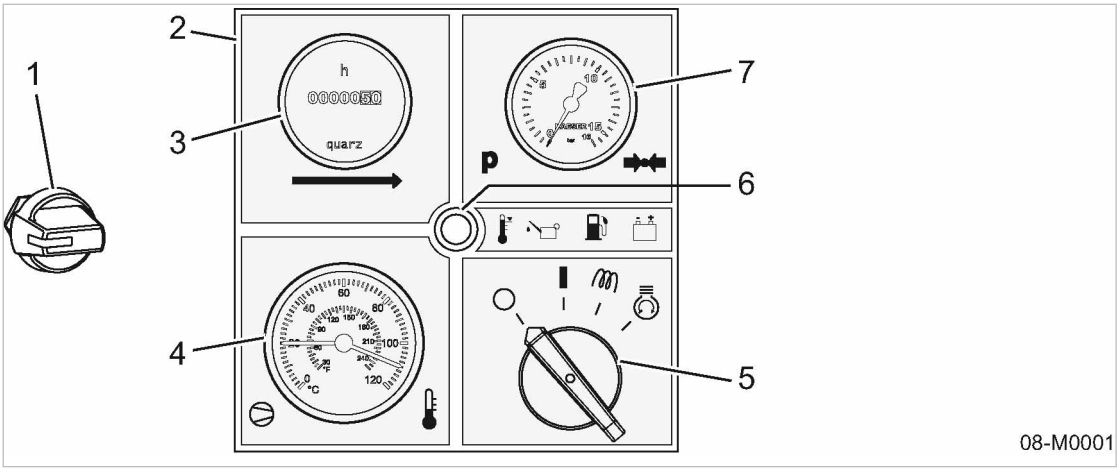

Fig. 22 Starting instruments

[1]	«Controller ON» switch	[I]	ON
[2]	Control panel	[II]	Preheating
[3]	Operating hours counter	[III]	START
[4]	Temperature gauge	[6]	*Charging indicator lamp, Group alarm lamp*
[5]	«Ignition switch»:	[7]	Compressed air outlet pressure gauge
[0]	STOP/OFF		

Note the following when operating in snow and ice

Significant snow or ice build-up can occur on the machine when operating in winter conditions.

➢ Remove any snow and/or ice from the machine before operating.

8.2.1 Commissioning the machine

1. Open the canopy.
2. Turn the «Controller ON» switch [1] to the “**I**” position.

3. Close and secure the enclosure.
4. Open all compressed air discharge valves.

8.2.2 Starting the machine

1. **NOTICE** *Irreparable damage to the starter!*
   Improper operation can damage the starter irreparably.
   - ➢ *Do not activate the starter switch when the engine is still running.*
   - ➢ *Do not turn and hold the starter switch for longer than 30 seconds.*
   - ➢ *Wait for a few minutes after each attempt to start the machine.*
   - ➢ *The ignition switch must be returned to the neutral position before each start attempt (re-start protection).*
2. Turn the «ignition switch» [5] to the "**I**" position.
   The *charging indicator lamp* should illuminate.
3. Turn the «ignition switch» to the "**II**" position and hold in place (max. 5-10 seconds).
   The glow plugs are activated and the diesel engine preheated.
4. Turn the «ignition switch» to the "**III**" position and release it as soon as the engine starts.
   The *charging indicator lamp* is extinguished as soon as the engine is running.
   If the charging indicator lamp is not extinguished, a fault has occurred. See chapter 9.2.

The electric fuel pump starts automatically during preheating. This vents the fuel lines before each start.
The maximum preheating time should be 5-10 seconds.

8.2.3 Running the machine up to operating temperature

To avoid needless wear, the engine should be run in IDLE until the airend discharge temperature has reached 86 °F. The airend discharge temperature is displayed by the temperature gauge on the control panel.

Option ba

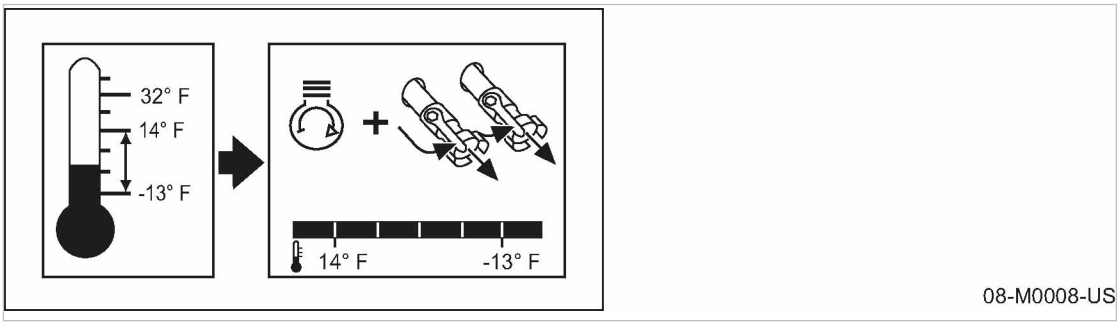

Fig. 23 Warm-up period label for ambient temperatures below 14 °F

- ➢ Allow the machine to warm up in IDLE.

8.2.4 Option cb
Setting the discharge pressure by using the proportional controller

⚠ CAUTION

Danger from incorrectly set pressure!
Danger from malfunctioning or not functioning compressed air tools when the machine's discharge pressure is set incorrectly.

- ➢ *Use connected compressed air tools only with the pressure appropriate for its purpose (compressed air tool working pressure).*
- ➢ *Comply with the information and notes provided in the compressed air tool's operating instruction.*

Discharge pressure is adjusted manually on the proportional controller. The proportional controller is located on the machine's oil separator tank cover. The set pressure is shown the pressure gauge on the control panel.

The pressure setting on the proportional controller can only be lower than the maximum working pressure of the machine.

Precondition The machine is switched off.

Option cb

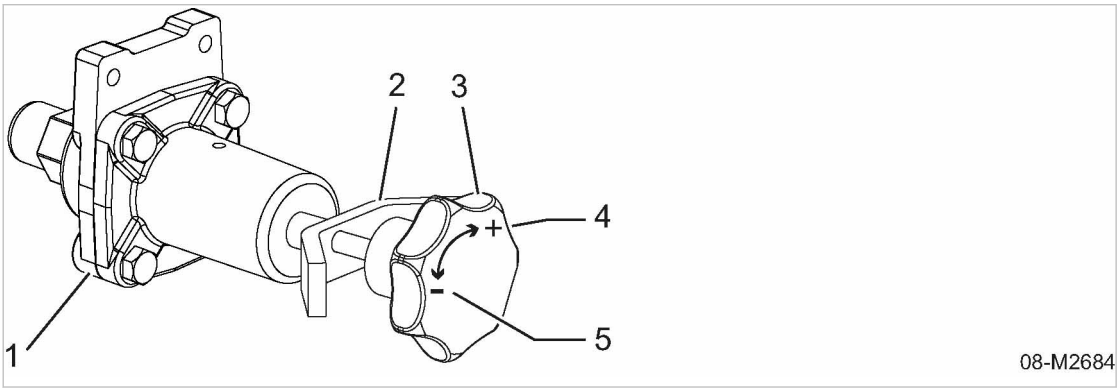

Fig. 24 Proportional controller

1. Proportional controller
2. Adjusting knob lock
3. «Pressure setting» knob
4. Positive direction of rotation
5. Negative direction of rotation

1. Open the enclosure.
2. Turn the «pressure setting» adjusting knob lock counter-clockwise until the knob has loosened.
3. Adjust the «pressure setting» adjusting knob:
   - to increase the discharge pressure, turn the adjusting knob clockwise (positive direction of rotation).
   - To reduce the discharge pressure, turn the adjusting knob counter-clockwise (negative direction of rotation).
4. Turn the locking device clockwise until the adjusting knob is locked in place.
5. Close the canopy.
6. Start the machine and run it in LOAD mode.
7. Check the pressure set on the instrument panel gauge.

If the indicated pressure is not the discharge pressure required, the machine should be shut down and the setting procedure repeated.

8.2.5 Operating the machine under load

Precondition The airend discharge temperature must be at least 86 °F

1. Connect the consumer(s) to the compressed air discharge valves.
2. Open the compressed air discharge valves.

8.2.6 Shutting down the machine

1. Close all «compressed air discharge valves» on the air distributor.
   The engine is running in IDLE.
2. Turn the «ignition switch» to the “**0**” position.
   The engine switches off.

Decommissioning the machine:

1. Open the canopy.
2. Turn the «Controller ON» switch to the “**0**” position.
3. Close the canopy.

Lock the canopy if necessary.

8.3 Refuelling the machine

In order to avoid accidents caused by igniting fuel, special caution must be exercised when filling the fuel tank.

⚠ DANGER

Fuel constitutes a fire hazard!
Overflowing or spilled fuel can ignite upon contact with hot engine parts, open flames or sparks, resulting in serious burns.

- ➢ *Only refuel the machine once it has been switched off and allowed to cool down.*
- ➢ *Never refuel the machine in the vicinity of open flames or sparks.*
- ➢ *Do not allow fuel to spill or overflow.*
- ➢ *Do not smoke.*

➢ Follow all instructions carefully.

8.3.1 Using the correct type of fuel

In the worst case scenario, use of the incorrect fuel type in a modern diesel engine can result in irreparable damage to the injection system and engine.

The worst case scenario occurs when a modern diesel engine is started up using petrol or premium-grade fuel. Because these types of fuel lack the special lubricating properties of diesel, it is primarily the precision components in the injection system that will be irreparably damaged. Secondary damage may occur to the drive engine.

Example: Machine with diesel engine	Measures
■ Fuel tank is filled with petrol or premium-grade fuel. ■ Error is noticed. ■ Engine is **not** started.	➢ Do not start the engine under any circumstances. ➢ Drain / pump out the incorrect fuel from the tank. ➢ Arrange for the fuel tank to be cleaned. ➢ Fill the tank with diesel fuel.
■ Fuel tank is filled with petrol or premium-grade fuel. ■ Error is **not** noticed. ■ Engine is started.	➢ Switch off the drive engine immediately. ➢ Contact an engine workshop. ➢ Drain / pump out the incorrect fuel from the tank. ➢ Arrange for the fuel tank to be cleaned. ➢ Arrange for the fuel system to be cleaned. ➢ Arrange for the injection system to be checked / replaced. ➢ Arrange for the engine to be checked / replaced. ➢ Fill the tank with diesel fuel.

Tab. 71 Measures required should the fuel tank be filled with the incorrect fuel type

The manufacturer shall not be liable for any damage caused due to filling the tank with the incorrect fuel type.

The fuel tank must be filled exclusively with liquid fuel of the correct type and the recommended specification.

A label placed on the fuel tank in the vicinity of the filler port indicates the correct fuel type, see Fig. 25.

NOTICE

Operating the machine with the incorrect fuel type will result in damage to the injection system and the engine!

- ➢ *Arrange for the fuel tank to be emptied and cleaned.*
- ➢ *Arrange for the entire fuel system to be cleaned.*
- ➢ *If necessary, arrange for the injection system / engine to be replaced.*
- ➢ *Only fill the fuel tank with diesel that complies with the recommended specifications.*

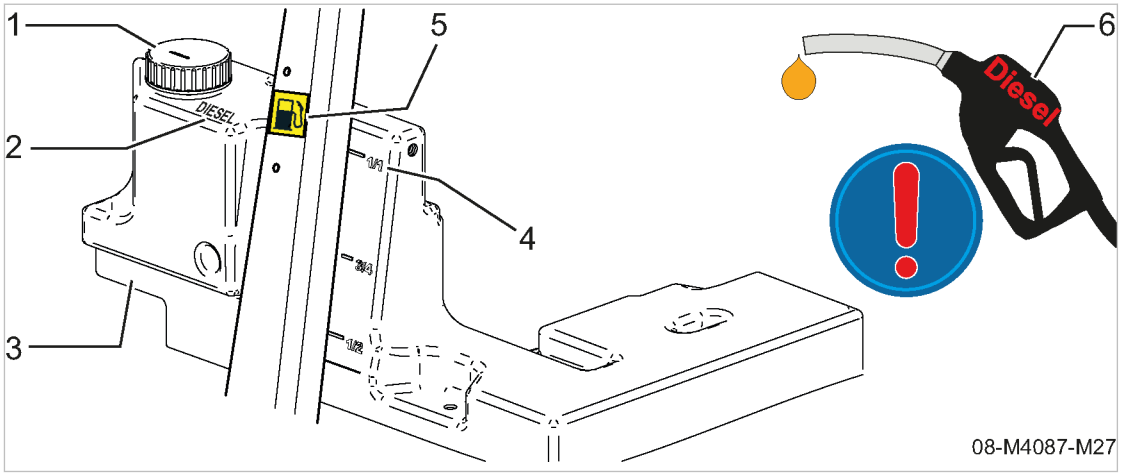

Fig. 25 Filling the tank with the correct fuel type

1 Fuel tank cap
2 Correct fuel type
3 Fuel tank
4 *Maximum fill level* marking
5 Refuelling label
6 Diesel fuel nozzle

➢ Check the correct fuel type and specifications by referring to Table 72.

Fuel / fuel specification	Designation / standard
Fuel type	Diesel fuel
Recommended fuel specification	EN 590(1)
Recommended fuel specification	ASTM D975(2)

(1) ≙ Sales region Europe, (2) ≙ Sales region USA

Tab. 72 Fuel / fuel specification

Fuel type / specification does not comply with regulations.

➢ Under no circumstances must the fuel tank be filled with the incorrect fuel type.

Further information For more details on the correct fuel specification, see Chapter 2.8.3.

8.3.2 Filling the fuel tank at a pump by means of a refuelling nozzle

Liquid fuels expand at high ambient temperatures. To avoid overflowing, the fuel tank must not be filled to the brim.

The *maximum fill level* is indicated on the fuel tank.

Precondition The machine is standing level.

The machine has cooled down.

The enclosure is open.

All compressed air consumers are disconnected,
the discharge valves are open,
the machine is fully vented, the pressure gauge reads 0 psig.

The negative cable to the battery is disconnected.

The selected fuel meets the requirements specified in Table 72.

1. Loosen and remove the fuel tank cap.

2. Insert the diesel fuel nozzle into the filler port.
3. Activate the nozzle.
   Refuelling begins.
4. Wait until the maximum fill level of the fuel tank has been reached.
   Sufficient expansion volume remains.
5. Shut off and remove the fuel nozzle.
6. Close the filler port with the cap.

Dispose of any spilled fuel and fuel-contaminated working materials in accordance with applicable environmental regulations.

Preparing for operation

1. Connect the negative cable to the battery.
2. Close the enclosure.

8.3.3 Filling the fuel tank on a construction site by means of a canister

Liquid fuels expand at high ambient temperatures. To avoid overflowing, the fuel tank must not be filled to the brim.

The *maximum fill level* is indicated on the fuel tank.

Material: Funnel

Precondition:
The machine is standing level.
The machine has cooled down.
The enclosure is open.
All compressed air consumers are disconnected,
the discharge valves are open,
the machine is fully vented, the pressure gauge reads 0 psig.
The negative cable to the battery is disconnected.
The selected fuel meets the requirements specified in Table 72.

1. Loosen and remove the fuel tank cap.
2. Insert the funnel into the filler port.
3. Carefully pour the contents of the canister into the funnel.
4. Do not allow fuel to spill or overflow.
5. Fill the tank to the *maximum fill level* marking.
   Sufficient expansion volume remains.
6. Remove the funnel.
7. Close the filler port with the cap.

Dispose of any spilled fuel and fuel-contaminated working materials in accordance with applicable environmental regulations.

Preparing for operation

1. Connect the negative cable to the battery.
2. Close the enclosure.

8.4 Cleaning the machine after operation

For the machine to be in proper technical condition, it must also be clean. In particular, the interior of the machine should not be heavily contaminated with oil.

When cleaning the interior of the machine using a high-pressure washer, appropriate measures must be taken for effective protection of the electrical components from jet water.

➢ The machine must be cleaned by authorized and trained personnel only!

Cleaning by means of dry-ice blasting is strictly prohibited! This can result in unforeseen damage.

Material
Eye protection
Cleaning cloth
Cleaning agents
High-pressure washer

Precondition
The machine is standing in a cleaning area equipped with an oil separator,
the machine is standing on level ground and has cooled down.

The machine is fully vented,
the pressure gauge reads 0 psig!

The Controller ON/OFF switch is switched off,
the negative cable of the battery has been disconnected.

⚠ WARNING

Stirred up dirt particles and hazardous materials!
Injury to the eyes.

➢ *Wear safety glasses.*

NOTICE

Jet water can damage the machine!
Jet water can damage or destroy electrical components and sensitive display instruments.

➢ *Do **not** direct jet water at electrical components.*

➢ *Observe the separate manufacturer instructions regarding external and internal cleaning of the machine.*

➢ *Deploy the extension pole of the high-pressure washer in order to maintain the necessary distance from the object being cleaned.*

➢ *Keep the extension pole of the high-pressure washer in constant motion.*

➢ Clean the machine carefully!

8.4.1 Cleaning the exterior of the machine

Overview:

- Open the closed floor pan (option)
- Check the protective covers are over all plug sockets on the exterior of the machine (options)
- Cover sensitive components
- Clean the exterior
- Remove the covers

- Clean the electrical components (options)
- Clean sensitive display instruments

Option oe **Opening the closed floor pan:**

In order to prevent liquid from accumulating inside the machine, the closed floor pan must be opened.

1. Remove all plugs.
2. Clean all plugs.

Checking the protective covers are over all plug sockets on the exterior of the machine:

To prevent water ingress, all plug sockets are equipped with self-closing protective covers.

Option symbol	Designation	Position
tc, te	Lighting plug socket	Front side of machine
bb	Coolant preheating plug socket	See chapter 7.4.3.
gb	Electrical consumer plug socket	See chapter 13.3.

Tab. 73 Plug sockets on the exterior of the machine

➢ Check that protective covers on the optional plug sockets are all closed correctly.

Covering sensitive components:

1. Cover display instruments.
2. Cover the generator control box (option) with a plastic sheet and close with adhesive tape.
   Sensitive display instruments and the generator control box are protected against splash water.

Cleaning the exterior of the machine:

In order to prevent damage when cleaning with a high-pressure washer, the following minimum distances from the object being cleaned must be maintained:

- Round jet nozzles: approximately 2.3 ft
- Fan jet nozzles: approximately 1 ft
- Dirt blasters: approximately 1 ft

1. Do **not** use jet water to clean plug sockets.
2. Do **not** use jet water to clean the covered generator control box.
3. Deploy the extension pole of the high-pressure washer in order to maintain the necessary distance from the object being cleaned.
4. Keep the extension pole of the high-pressure washer in constant motion.

➢ Clean the exterior of the machine with the high-pressure washer.

Result External cleaning by high-pressure washer is complete.

Removing all covers:

1. Remove the cover from the display instruments.
2. Remove the cover from the generator control box (option).

Result The plastic sheeting and adhesive tape is removed from the interior of the machine.

Cleaning the electrical components

In the event of heavy contamination of the generator control box (option), a gentle degreasing cleaning agent may be used. The cleaning agent must not alter the surfaces of the objects being cleaned.

1. Clean all plug sockets manually using a cleaning cloth.
2. Clean the generator control box manually using a cleaning cloth.

Cleaning indicating instruments:

➢ Clean sensitive display instruments manually using a cleaning cloth.

8.4.2 Cleaning the interior of the machine

Overview:

- Cover the intake openings on both air filters
- Adjust the high-pressure washer
- Clean the interior of the machine
- Remove all covers
- Seal the floor pan (option)

Covering the intake openings on both air filters:

1. Cover the intake opening on the engine air filter.
2. Cover the intake opening on the compressor air filter.

Setting the high-pressure washer:

➢ For setting the high-pressure washer, see chapter 74.

High-pressure washer	Value
Interior diameter of the jet nozzle [mm]	6.3
Flow rate [gal/min]	3.3

Tab. 74 High-pressure washer setting

Cleaning the interior of the machine:

Precondition Set the high-pressure washer as per the values given in Table 74.

1. **NOTICE** *Jet water can damage the machine!*
   Jet water can damage or destroy electrical components and sensitive display instruments.
   ➢ *Do **not** direct jet water at electrical components.*
2. Do **not** direct jet water at the starter, control box or sensitive display instruments.
3. Do **not** direct jet water at solenoid valves or electrical plug-in connections.
4. Do **not** direct jet water at the starter battery.
5. Do **not** direct jet water at the generator (option) or its connector box.
6. Clean non-sensitive components/surfaces inside the machine.

While cleaning, keep the extension pole of the high-pressure washer in constant motion.

Accumulated water in the closed floor pan.

- ➢ Remove the plugs.
- ➢ Allow the water to drain out.

For information on draining liquids from inside the machine, see chapter 10.10.7.

Removing all covers:

1. Remove the cover from the engine air filter intake opening.
2. Remove the cover from the compressor air filter intake opening.

Result The plastic sheeting and adhesive tape is removed from the interior of the machine.

Cleaning sensitive components:

In the event of heavy contamination of the generator (option), a gentle degreasing cleaning agent may be used. The cleaning agent must not alter the surfaces of the objects being cleaned.

- ➢ Clean the following components manually using a cleaning cloth:
  - Generator
  - Generator connector box
  - Solenoid valves
  - Electrical plug-in connections

Option oe **Sealing the floor pan:**

Precondition Any liquid inside the machine has completely drained away.

1. If required, remove any remaining contaminants with a cleaning cloth.
2. Reinsert all plugs.

Dispose of dirty covers, adhesive and cleaning cloths in accordance with applicable environmental protection regulations.

8.5 Operating the options

- ➢ Comply with all instructions.

8.5.1 Option oa
Operating the battery isolating switch

NOTICE

Danger of short circuit!
Damage to the machine electrical system is possible.

- ➢ *Use the «Battery isolating switch» only when the machine is switched off.*
- ➢ *Do not use the «Battery isolating switch» as a main or emergency switch!*

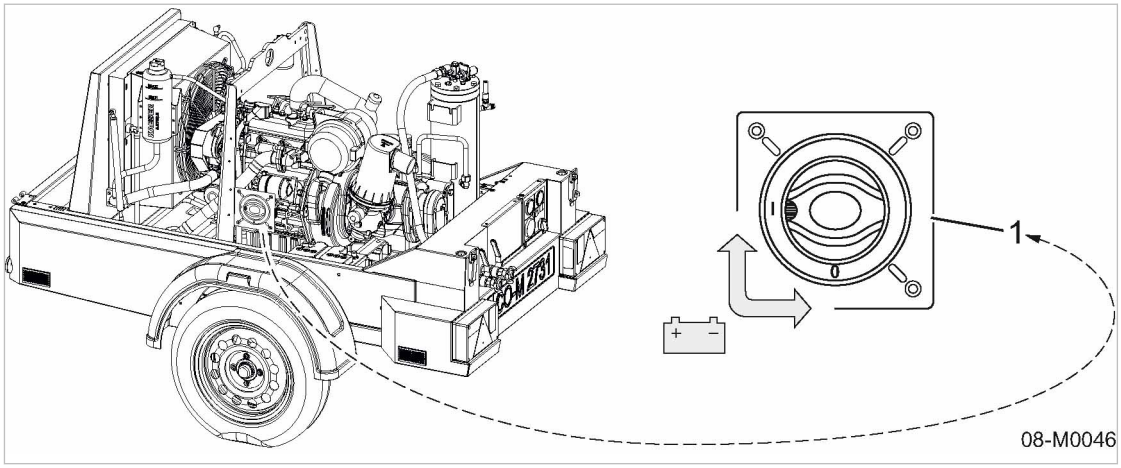

Fig. 26 Battery isolating switch

[1] «Battery isolating switch»
I – On
0 – Off

➢ Raise the cover.

Start the machine

1. Activate the «Battery isolating switch».
   The battery is now connected to the machine's electrical system. The machine can now be started.
2. Close the canopy.

Shutting down the machine:

1. Switch the «Battery isolating switch» to the 'Off' position.
   The battery is disconnected from the machine's electrical system.
2. Close the canopy.

8.5.2 Option ea
Operating the tool lubricator

Precondition The machine is shut down and switched off.
Tool lubricator filled with oil.

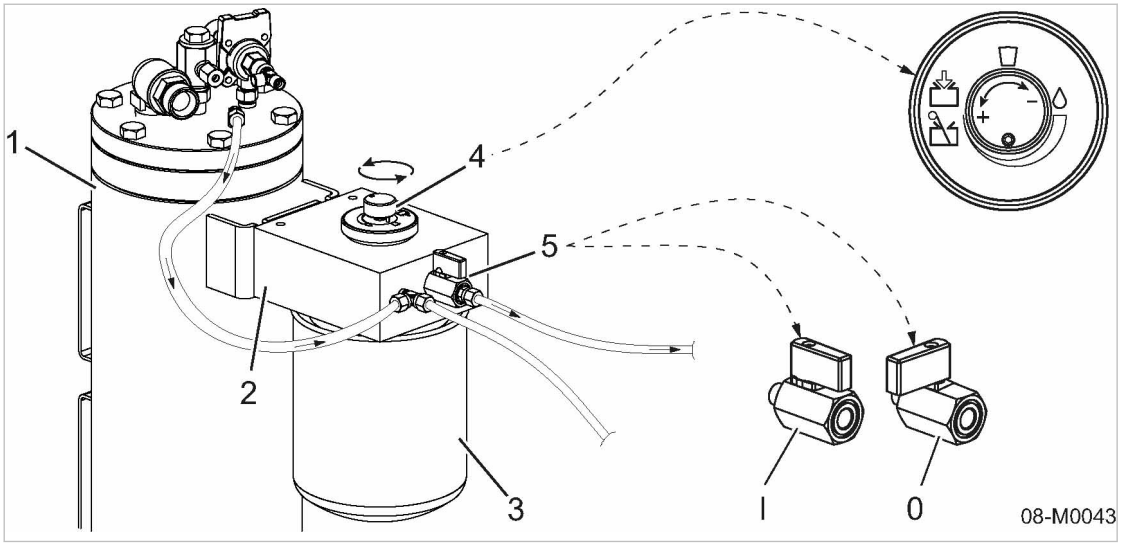

Fig. 27 Adjusting the tool lubricator

[1] Oil separator tank
[2] Tool lubricator
[3] Lubricant container
[4] Metering knob
[5] Shut-off valve
I – open
0 – closed

➢ Open the enclosure.

Releasing lubricating oil

1. Open the shut-off valve [5].
2. Close the door.

Setting the oil flow

The amount of oil the compressed air should contain depends on the application and must be determined by the user. It depends on the nature of the air consumers and the supply hoses.

The metering valve controls the flow of oil mist into the air.

- Turning clockwise: reduces the oil flow.
- Turning counter-clockwise: increases the oil flow.

1. Set the required oil flow.
2. Close the door.

Further information Fill the tool lubricator with suitable oil (see chapter 10.10.1).

Shutting off lubricating oil

1. Close the shut-off valve [5].
2. Close the door.

8.5.3 Option ba
Using the low-temperature equipment

➢ Determine which low temperature equipment is fitted to the machine.

8.5.3.1 Option bb
Using the coolant pre-heating

1. Start the coolant pre-heating as described in chapter 7.4.3.
2. Pre-heat the engine coolant for approx. 3 hours.
   Thermal balance achieved.
3. Disconnect the power plug from the user's power outlet.
4. Disconnect the unit plug from the connection of the machine.
5. Open the enclosure.
6. Stow the power cable inside the machine.
7. Close the enclosure.

➢ Gently start the machine with the pre-heated coolant of the engine.



Diesel engines run more efficiently if the diesel engine has been pre-heated. The use of coolant pre-heating therefore reduces pollutant emissions and the fuel consumption due to the shortened warm-up phase.

In addition, wear of the engine is reduced, thus increasing its service life.

8.5.3.2 Option bc
Operating the machine with frost protector

Prior to daily decommissioning, the machine must be run with switched-on antifreeze for a short time in order to prevent the control and regulating system of the machine from freezing.

Precondition The machine is switched off.

Air consumers are disconnected,
the outlet valves are open,
the machine is fully vented, the pressure gauge reads 0 psig!

1. Open the enclosure.
2. Set the defroster shut-off valve to winter operation as described in table 75.

Instructions	Switching position for winter operation	Complied with?
Open the shut-off valve	X	
Close the shut-off valve	—	

X ≙ applicable, — ≙ not applicable

Tab. 75 Frost protector on and off

3. Close the enclosure.
4. Start the machine.
5. Let machine run in IDLE mode for a short time.
   The control and regulating system of the machine is moistened with antifreeze.
6. Switch off the machine.
7. Wait until the machine has automatically vented.
8. Open the enclosure.
9. Set the shut-off valve to summer operation.
10. Close the enclosure.

Result During wintry ambient temperatures, the control and regulating system of the switched-off machine is protected against freezing. When the machine is started and warmed-up on the next day, the control and regulating system can immediately function properly.

Further information See chapter 10.10.5 for filling the frost protector with antifreeze.

8.5.4 Option ga, gb Generator operation

⚠ DANGER

Risk of fatal injury caused by contact with live components!

- ➢ *Check correct function of the insulation monitoring device daily (see chapter 7.5).*
- ➢ *Have the generator and control box checked annually by a qualified electrician (see chapter 13.7).*

Overview:

- Note before operating the generator
- Switching on the generator
- Disconnect electrical consumers
- Switching off the generator

➢ Follow instructions

8.5.4.1 Note before operating the generator

- The power consumption values of simultaneous consumers are added.
- The maximum continuous power loading on the generator by the connected consumers is limited by the safety cut-out.

1. Determine the consumption values of the electric consumers.
2. Do not exceed the maximum system load caused by electric consumers.
3. If necessary, reduce the number of connected consumers.
4. Read the technical specification for the generator before connecting voltage sensitive equipment.
5. Check that electrical consumers and their connecting cables are in perfect condition.
6. Note the labelling of the individual sockets on the generator control cabinet regarding voltages and amperages.
7. Plug in electric consumers to the sockets one by one.
8. Switch on electric consumers one by one.
9. Consumers with unfavorable on/off characteristics (e.g. high starting current) should be started first.

8.5.4.2 Switching on the generator

Precondition Read and follow the instructions "Before generator operation".

LOAD mode

A pictogram beneath the «generator main switch» indicates the correct "cutting-in" of the generator.

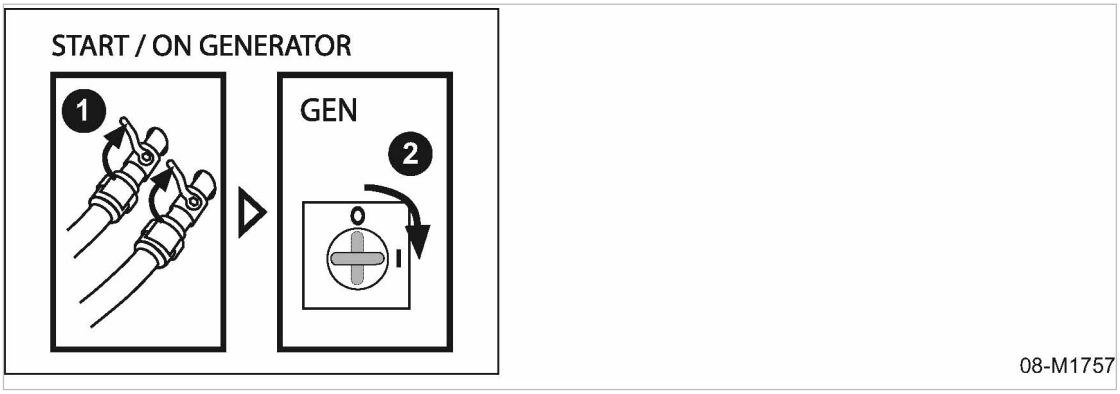

Fig. 28 Generator cut-in pictogram

[1] Compressed air outlet valve closed.
[2] Turn the «generator main switch» to the "I" position.

1. Close the compressed air outlet valves.
2. Turn the «generator main switch »to the "I" position.
3. Turn the «mode selector switch» to the required mode of operation
4. Connect electrical consumers.

Further information See chapter 4.6.3.2 for generator controls.
See chapter 4.6.3.1 for generator operating modes.

8.5.4.3 Disconnect electrical consumers

1. Switch off the electric consumers one after another.
2. Switch off electrical consumers drawing the highest current last.
3. Remove the plugs from the sockets on the generator control cabinet.
4. Check that the protective covers on the power sockets are correctly closed.

8.5.4.4 Switching off the generator

Precondition The electric consumers are switched off.
The plugs are removed.

1. **NOTICE** *Thermal overload of the turbo generator.*
   Stopping the machine abruptly after the generator has been in operation for some time can cause heat damage to the generator.
   ➢ *Allow the engine to run for about 2 minutes in idle before shutting down to allow the generator to cool down.*
2. Turn the «generator main switch» to the "0" position.
   The engine runs in IDLE and the generator can cool down.
   After running about 2 minutes in IDLE, the generator has cooled down sufficiently for the engine to be stopped.

8.5.5 Option ua
Using the hose reel

The hose reel is positioned at the front of the machine. An additional shut-off valve for the compressed air extension hose makes it easier to switch the compressed air on at the front of the machine.

Material Protective gloves

⚠ CAUTION

Burns from hot components

➢ *Always wear protective gloves.*

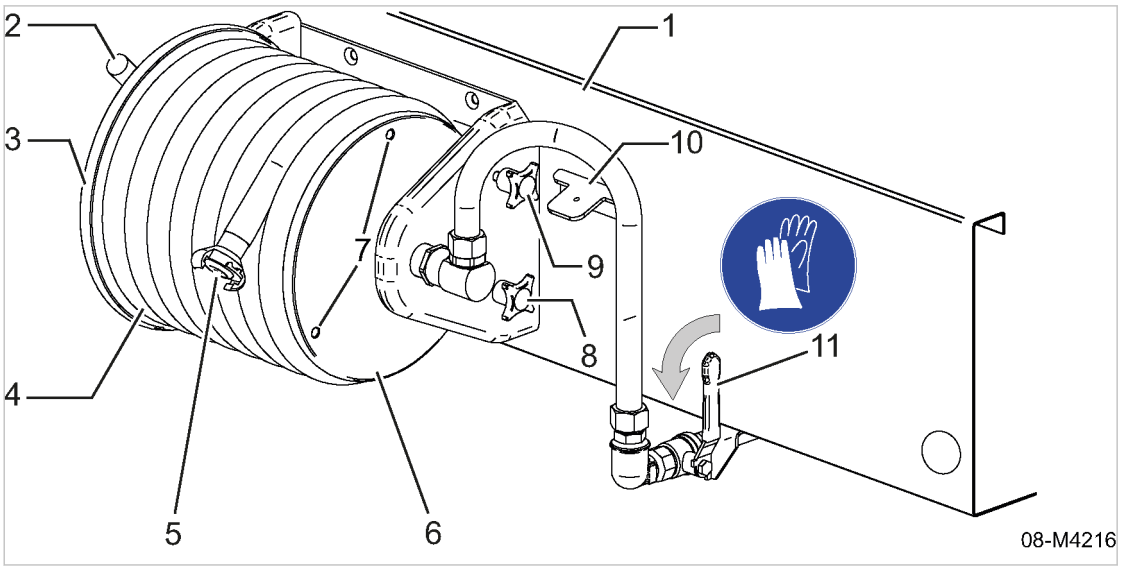

Fig. 29 Additional shut-off valve for compressed air extension hose

[1] Machine front side
[2] Crank handle
[3] Hose drum
[4] Compressed air extension hose
[5] Hose coupling
[6] Side panel with securing holes
[7] Securing hole
[8] Clamping screw
[9] Transport locking screw
[10] Bracket
[11] Shut-off valve lever

8.5.5.1 Preparing the machine for operation with a compressed air extension hose

1. Pull the hose coupling [5] from the bracket.
2. Loosen the transport locking screw.
3. Loosen the clamping screws.
4. Swing out the crank handle.
5. Reel out the compressed air extension hose [4] to the required length.
6. Tighten the clamping screws.
   The hose reel is secured against unintentional unrolling of the compressed air extension hose.
7. Swing the crank handle back in.
8. Connect the air tool.

8.5.5.2 Operating the machine with a compressed air extension hose

1. Start the machine.
2. Hold the air tool.
3. Push the shut-off valve for the compressed air extension hose (11) in the direction of the arrow.

Result The shut-off valve for the compressed air extension hose is opened.

8.5.5.3 Operating the machine without a compressed air extension hose

1. Close the shut-off valve for the compressed air extension hose.
2. Disconnect the air tool.
3. Swing out the crank handle.
4. Reel in the compressed air extension hose evenly and tightly.
5. Tighten the clamping screws.
   The hose reel is secured against unintentional unrolling of the compressed air extension hose.
6. Swing the crank handle back in.

8.5.5.4 Securing the hose reel for transport

1. Check that the compressed air extension hose is reeled in evenly and tightly.
2. If necessary, reel the compressed air extension hose again.
3. Screw the transport locking screw into the securing hole as far as it will go.
4. Tighten the clamping screws.
5. Put the hose coupling onto the bracket.

9 Fault Recognition and Rectification

9.1 Basic instructions

The following tables are intended to assist in fault finding and rectification.

1. Do not attempt fault rectification measures other than those given in this manual!
2. In all other cases:
   Have the fault rectified by an authorized KAESER service representative.

Further information

Observe the instructions in chapter 3 "Safety and Responsibility" and prevailing local safety regulations when rectifying faults and malfunctions.
Comply with local applicable safety provisions!

9.2 Evaluating engine faults and alarms

9.2.1 Engine stops or fails to start

Possible cause	Action	Where can I get help?	
		SW	KS
Starter faulty.	Replace starter.	X	–
The fuel cut-off device has not opened.	Check the coil and electrics and replace if necessary.	X	–
Fuel tank empty.	Fill the fuel tank.	–	–
Air pockets in fuel line between fuel tank and injection pump.	Bleed the fuel line, see chapter 10.3.3.	–	–
Fuel filter clogged.	Clean or replace, see chapter 10.3.3.	X	X
Fuel line broken.	Replace.	X	X
Control fuse or relay fault.	Check. Replace if necessary.	X	X
Discharge temperature too high.	Adjust.	–	X
Defective temperature gauge switch giving no enable signal.	Repair or replace if necessary.	–	X
Ignition switch defective.	Repair or replace if necessary.	–	X
Electrical connections and/or cable loose or broken.	Tighten. Replace cables if necessary.	X	X
The battery is electrically isolated from the on-board power supply.	Set the battery isolating switch (option) to the “I” position, see chapter 8.	–	–
Battery faulty or charge too low.	Maintain battery, see chapter 10.3.8.	–	–
Engine alternator faulty.	Repair or replace if necessary.	X	X
Defective alternator regulator.	Check regulator. Replace if necessary.	X	X

SW = specialist workshop; KS = KAESER SERVICE

Possible cause	Action	Where can I get help?	
		SW	KS
Oil pressure switch indicating insufficient oil pressure.	Check engine oil level, see chapter 10.3.4.	X	X
	Change oil. Repair engine if necessary.	X	X
SW = specialist workshop; KS = KAESER SERVICE			

Tab. 76 Fault: “Engine stops or fails to start”

9.2.2 Engine does not reach full speed

Possible cause	Action	Where can I get help?	
		SW	KS
Air pockets in fuel line between fuel tank and injection pump.	Bleed the fuel line, see chapter 10.3.3.	X	X
Fuel filter clogged.	Clean or replace, see chapter 10.3.3.	X	X
Fuel line broken.	Replace fuel line.	X	X
Speed adjustment cylinder maladjusted or defective.	Repair or replace if necessary.	X	X
SW = specialist workshop; KS = KAESER SERVICE			

Tab. 77 Fault: “Engine not reaching full speed”

9.2.3 Indicator lamp remains on

Possible cause	Action	Where can I get help?	
		SW	KS
Electrical connections and/or cable loose or broken.	Tighten. Replace cables if necessary.	X	X
Engine alternator faulty.	Repair or replace if necessary.	X	X
Defective alternator regulator.	Check regulator. Replace if necessary.	X	X
Engine oil pressure too low.	Check engine oil level, see chapter 10.3.4.	X	X
	Check the engine and repair if necessary.	X	X
SW = specialist workshop; KS = KAESER SERVICE			

Tab. 78 Alarm: "Control lamp remains on"

9.2.4 Engine knocking or fails to start

Possible cause	Action	Where can I get help?	
		SW	KS
Diesel engine running on petrol or premium-grade petrol.	Switch the machine off immediately (see Chapter 8.3). Pump out / drain the tank. Replace the fuel injection pump. Check the drive engine.	X	X
SW = specialist workshop; KS = KAESER SERVICE			

Tab. 79 Fault: “Engine knocking or fails to start”

9.3 Compressor faults and alarms

9.3.1 Working pressure too high

Possible cause	Remedy	Where can I get help?	
		SW	KS
Proportional controller maladjusted or defective.	Have it repaired or replaced if necessary.	–	X
Inlet valve does not close.	Check the controller, control line and inlet valve and replace if necessary.	–	X
Pressure gauge indicating incorrect reading.	Have it repaired or replaced if necessary.	–	X
Venting valve does not blow off.	Check the connections and function and have it repaired or replaced as necessary.	–	X
SW = Specialized workshop; KS = KAESER SERVICE			

Tab. 80 Fault: Working pressure too high

9.3.2 Working pressure too low

Possible cause	Remedy	Where can I get help?	
		SW	KS
Proportional controller maladjusted or defective.	Have it repaired or replaced if necessary.	–	X
Inlet valve not opening or only opening partially.	Have it repaired or replaced if necessary.	–	X
Pressure gauge indicating incorrect reading.	Have it repaired or replaced if necessary.	–	X
Safety relief valve maladjusted and/or leaking.	Have it repaired or replaced if necessary.	–	X
SW = Specialized workshop; KS = KAESER SERVICE			

Possible cause	Remedy	Where can I get help?	
		SW	KS
Venting valve blowing off.	Check the connections and function and have it repaired or replaced as necessary.	–	X
Engine does not run at maximum speed (in LOAD mode).	See chapter 9.2	X	X
Engine air filter and/or compressor air filter clogged.	Clean or change, see chapters 10.3.2 and 10.4.7.	–	–
Oil separator cartridge heavily clogged.	Change, see chapter 10.4.6.	–	–
SW = Specialized workshop; KS = KAESER SERVICE			

Tab. 81 Fault: Working pressure too low

9.3.3 Safety relief valve blows off

Possible cause	Remedy	Where can I get help?	
		SW	KS
Oil separator cartridge heavily clogged.	Change, see chapter 10.4.6.	–	–
Inlet valve does not close.	Check the controller, control line and inlet valve and replace if necessary.	–	X
Safety relief valve maladjusted and/or leaking.	Adjust or have it replaced if necessary.	–	X
SW = Specialized workshop; KS = KAESER SERVICE			

Tab. 82 Fault: Safety valve blowing off

9.3.4 Machine overheating

Possible cause	Remedy	Where can I get help?	
		SW	KS
Defective cooling fan.	Have the blades or the complete fan wheel replaced.	–	X
Oil cooler surface clogged.	Clean surface, see chapter 10.5.	–	–
The working element of the thermostatic valve not working.	Have it repaired or replaced if necessary.	–	X
Working pressure too high (proportional controller maladjusted).	Reset to the permissible value or have it replaced.	–	X
SW = Specialized workshop; KS = KAESER SERVICE			

Possible cause	Remedy	Where can I get help?	
		SW	KS
Oil separator cartridge heavily clogged.	Measure the pressure differential and change the cartridge if greater than 14.5 psig. Change, see chapter 10.4.6.	–	X
Compressor oil filter cartridge clogged.	Change, see chapter 10.4.4.	–	–
Compressor cooling oil level too low.	Replenish, see chapter 10.4.2.	–	–
Oil pipes leaking.	Seal leaks or have pipes changed.	X	X
Liquid cooling of the engine defective.	Have it repaired.	X	X
Cooling air blower defective.	Have it repaired.	X	X
Sediments in the coolant cooler.	Clean the coolant cooler from inside, see chapter 10.3.1.	–	–
Ambient temperature too high.	See installation conditions in chapter 5.2.	–	–
SW = Specialized workshop; KS = KAESER SERVICE			

Tab. 83 Fault: Machine overheating

9.3.5 Too much oil residue in the compressed air

Possible cause	Remedy	Where can I get help?	
		SW	KS
Oil separator cartridge scavenge line of compressor clogged.	Clean the oil separator cartridge dirt trap or replace the strainer and nozzle if necessary. See chapter 10.4.5	–	X
Cracked oil separator cartridge.	Change, see chapter 10.4.6.	–	–
Oil level in the oil separator tank too high.	Reduce to maximum level, see chapters 10.4.1 and 10.4.3.	–	–
SW = Specialized workshop; KS = KAESER SERVICE			

Tab. 84 Alarm: "Too much oil residue in the compressed air"

9.3.6 Oil flows from the compressor air filter after shutdown

Possible cause	Remedy	Where can I get help?	
		SW	KS
Defective non-return function of the inlet valve.	Repair or have it replaced if necessary.	–	X
SW = Specialized workshop; KS = KAESER SERVICE			

Tab. 85 Alarm: "Oil flows from the compressor air filter after shutdown"

9.3.7 Option da
High moisture content in the compressed air

Possible cause	Remedy	Where can I get help?	
		SW	KS
Blocked condensate drain on the compressed air water trap.	Clean the compressed air water trap or replace the strainer and nozzle if necessary. See chapter 10.10.3	–	X
SW = Specialized workshop; KS = KAESER SERVICE			

Tab. 86 Fault: High moisture content in the compressed air

9.4 Option ga
Generator faults and alarms

9.4.1 No voltage or too low a voltage from the generator

Possible cause	Remedy	Where can I get help?	
		Specialized workshop	KAESER Service
Defective drive belt.	Have replaced.	X	X
Generator / regulator defective	Have repaired.	X	X
Overload protection switch triggered because of overload or defect.	Check the power requirement of the connected consumers and reduce if necessary; check the consumers for short circuits.	X	–
	Check the overload protection switch and have changed if necessary.	X	X
Engine speed too low.	Have reset to rated speed.	X	X
Generator not switched in.	Switch in the generator.	–	–
The compressor's working pressure is set too high, engine overloaded, speed drops off	Have the working pressure adjusted.	X	X
The engine power is reduced because of climatic conditions or other effects.	Keep the generator and compressor load below the rated power	–	–

Tab. 87 Fault: No voltage or too low a voltage from the generator

9.4.2 Generator voltage too high

Possible cause	Remedy	Where can I get help?	
		Specialized workshop	KAESER Service
Generator / regulator defective	Have repaired.	X	X

Possible cause	Remedy	Where can I get help?	
		Specialized workshop	KAESER Service
Engine speed too high.	Have reset to rated speed.	X	X

Tab. 88 Fault: Generator voltage too high

10 Maintenance

10.1 Ensuring safety

Follow the instructions below for safe machine maintenance.

Warning instructions are located before a potentially dangerous task.

⚠ Disregard of warning instructions can cause serious injuries!

Complying with safety warnings

Disregard of safety warnings can cause unforeseeable dangers!

- ➢ Follow the instructions in chapter 3 “Safety and Responsibility”.
- ➢ Maintenance work may only be carried out by authorized personnel.
- ➢ Use one of the safety signs below to advise others that the machine is currently being serviced:

Sign	Meaning
	Don't activate the machine.
	Warning: The machine is being serviced.

Tab. 89 Advise others that the machine is being serviced.

- ➢ Before switching on, make sure that:

- ■ nobody is working on the machine,
- ■ all protective guards and cover panels are attached,
- ■ all doors, canopy, and panels are closed,
- ■ all tools have been removed from the machine.

- ➢ Do not carry out any checks or maintenance while the machine is running!

When working on the pressure system

Compressed air is contained energy. Uncontrolled release of this energy can cause serious injury or death. The following safety concerns relate to any work on components that could be under pressure.

- ➢ Disconnect any air consumers or tools.
- ➢ Depressurize all pressurized components and enclosures.

- ■ Wait until the compressor has automatically vented.
- ■ Open the compressed air outlet valve carefully.
- ■ Check: the pressure gauge reads 0 psig!

- ➢ Do not open or dismantle any valves.

When working on the drive system

Touching rotating, very hot or electrically-live components can result in serious injury.

- ➢ Shut down the machine before opening any doors/canopy.
- ➢ Disconnect the negative terminals on the batteries.
- ➢ Ensure that the machine is cooled down.

Further information

Details of authorized personnel are found in chapter 3.4.2.

Details of dangers and their avoidance are found in chapter 3.5.

10.2 Following the maintenance plans

10.2.1 Logging maintenance work

The maintenance intervals given are those recommended for KAESER original components with average operating conditions.

➢ In adverse conditions (e.g. oil and filter changes), perform maintenance work at shorter intervals.

Adverse conditions are, e.g.:

- Poor fuel quality
- High/low temperatures
- Much dust
- Frequent use

➢ Adjust the maintenance intervals with regard to local installation and operating conditions.

➢ Logging all maintenance work.

This enables you to determine the frequency of individual maintenance tasks and deviations from our recommendations.

Further information A list is available in chapter 10.12.

10.2.2 Maintenance tasks after commissioning

The table below lists maintenance tasks required after commissioning (initial start-up).

➢ Carry out maintenance tasks according to the following schedule.

Component: Task	After the first 50 h	After the first half year (250 hours)	See chapter	Note
Engine:				
Check the fuel lines and clamps.	X			KS, FW
–				

h = operating hours

KS ≙ Contact KAESER SERVICE,
FW ≙ Contact specialized workshop.

Tab. 90 Maintenance tasks after commissioning

10.2.3 Regular maintenance tasks

The following table lists the various maintenance intervals for the machine.

Maintenance interval	Short description
Daily	–
Every 250 h, at least annually	A250
Every 500 h, at least annually	A500

Maintenance interval	Short description
Every 1000 h, at least every 2 years	A1000
Every 1500 h, at least every 3 years	A1500
Every 3000 h, at least every 6 years	A3000
Every 20000 operating hours	A20000

Tab. 91 Maintenance intervals and regular maintenance tasks

The table below lists regular maintenance tasks.

➢ Carry out maintenance tasks punctually taking ambient and operating conditions into consideration.

10.2.3.1 Machine maintenance schedule

➢ Carry out maintenance tasks on time in accordance with the table below:

The maintenance tasks marked with (1) must also be carried out every 6 months if the annual runtime of your machine exceeds 500 operating hours.

The maintenance tasks marked with (2) depend on the engine oil and fuel used. The replacement intervals can be cut in half in the case of lower quality operating fluids/materials.

Observe the maintenance tasks marked with (3) in accordance with country-specific regulations.
Change the oil as per requirement, once per year at a minimum.

Assembly: Task	Daily	A250	A500	A1000	A1500	A3000	See Chapter	Note
Drive engine:								
Check engine air filter maintenance indicator.	X						10.3.2	
Check engine oil level.	X						10.3.4	
(1, 2) Change engine oil.		X					10.3.4	
(1, 2) Replace engine oil filter.		X					10.3.5	KS, FW
Clean engine air filter.		X					10.3.2	
Replace engine air filter.				X			10.3.2	KS, FW
Check/adjust drive belt tension.			X				10.3.6	KS, FW
Change drive belt.					X		10.3.6	KS, FW
Check coolant level.	X						10.3.1	
Clean coolant cooler.		X					10.5	
Check coolant/antifreeze.			X				10.3.1	KS, FW
Change coolant.					X		10.3.1	KS, FW
Remove residue from inside coolant cooler.					X		10.3.1	KS, FW

KS ≙ Contact KAESER SERVICE,
FW ≙ Contact Specialist Workshop

Assembly: Task	Daily	A250	A500	A1000	A1500	A3000	See Chapter	Note
Fill fuel tank.	X							
(1, 2) Replace fuel prefilter.		X					10.3.3	KS, FW
(1, 2) Replace fuel filter.		X					10.3.3	KS, FW
Check the fuel tank for dirt, clean if necessary.			X					
Clean tank strainer.			X					
Check fuel tank for secure attachment.		X					10.3.9	
Check fuel return line is free from leaks and tightly fitted.			X					KS, FW
Arrange for injector nozzles to be checked.						X		KS, FW
Arrange for injection pump to be checked.						X		KS, FW
Arrange for anti-vibration mount to be checked.				X			10.3.7	KS, FW
Arrange for valves to be adjusted.				X				KS, FW
Check battery electrolyte level and service cable connections.			X				10.3.8	
Check the exhaust gas section for leaks.	X							
Compressor:								
Check compressor air filter maintenance indicator.	X						10.4.7	
Check cooling oil level.	X						10.4.1	
(3) Change cooling oil.				X			10.4.3	
Change compressor oil filter.				X			10.4.4	
Clean compressor oil cooler.		X					10.5	
Clean compressor air filter.		X					10.4.7	
Replace compressor air filter.				X			10.4.7	
Clean/check the dirt trap for the oil separator cartridge oil return line.			X				10.4.5	
Replace the dirt trap for the oil separator cartridge oil return line.				X				

KS ≙ Contact KAESER SERVICE,
FW ≙ Contact Specialist Workshop

Assembly: Task	Daily	A250	A500	A1000	A1500	A3000	See Chapter	Note
Change oil separator cartridge in oil separator tank.				X			10.4.6	
Arrange for safety relief valve(s) to be checked.			X				10.4.8	KS, FW
Enclosure:								
Service rubber seals.			X				10.8.1	
Check function of closed enclosure.			X				10.8.2	
Check connection elements.			X				10.8.3	
Bodywork:								
Check sound insulation material.			X				10.7	
Arrange for crane suspension to be checked.			X					KS, FW
Hose lines (pressure hoses, fuel hoses):								
Check all hose lines of the machine for proper seating, leaks and wear; have them replaced if necessary.			X				10.9	KS, FW
If necessary, have the drive engine fuel hoses replaced.			X				10.9.1	KS, FW
If necessary, have the drive engine pressure hoses replaced.			X				10.9.2	KS, FW
If necessary, have the compressor pressure hoses replaced.			X				10.9.3	KS, FW
Further maintenance tasks:								
Check all accessible screw connections, lines and clamps on the machine are free from wear and tightly fitted.			X				10.6	KS, FW
Check electrical connections for tightness.			X					
Check lighting system functionality.	X							
KS ≙ Contact KAESER SERVICE, FW ≙ Contact Specialist Workshop								

Tab. 92 Regular machine maintenance tasks

10.2.3.2 Options maintenance schedule

➢ Carry out maintenance tasks on time in accordance with the table below:



The maintenance work marked with (*) must additionally be carried out every 6 months if the annual runtime of your machine exceeds 500 operating hours.

Option: Task	Daily	A250	A500	A1000	A1500	A20000	See chapter	Note
Option ea – Tool lubricator:								
Check the level in the lubricant container.	X						10.10.1	
Option da - Compressed air aftercooler:								
Clean the compressed air aftercooler.		X					10.10.2	
Option da – Compressed air/water separator:								
Clean/check the dirt trap (*).			X				10.10.3	
Option dd – Filter combination:								
Drain condensate.	X						10.10.4	
Replace the filter elements (*).			X				10.10.4	
Replace the filter element seal (*).			X				10.10.4	
Option bb – Coolant preheating:								
Arrange for the coolant preheating to be checked.			X					EF
Arrange for the power supply cable to be checked.			X					EF
Option bc – Defroster:								
Check/top off the level of the receiver tank.	X						10.10.5	
Option ne - Fuel/water separator:								
Empty the fuel water trap.	X						10.3.3.310.11.2.1	
Change the fuel filter.		X					10.3.3.310.11.2.1	
Option lb - Engine air intake shut-off valve:								
Clean/check engine air shut-off valve.		X					10.10.6	
Option oe – Sealed floor pan:								
KS ≙ Contact KAESER SERVICE, FW ≙ Contact specialist workshop, EF ≙ Contact a qualified electrician								

Option: Task	Daily	A250	A500	A1000	A1500	A20000	See chapter	Note
Check the machine interior for liquid accumulations.	X						10.10.7	
Option ga, gb – Generator:								
Carry out visual check of drive belt.		X					10.10.8	
Change drive belt.					X		10.10.8	
Arrange for the generator and generator control box to be checked.			X				13.7	EF
Arrange for the generator bearings to be checked.					X			KS, FW
Arrange for the generator bearings to be replaced.						X		KS, FW
KS ≙ Contact KAESER SERVICE, FW ≙ Contact specialist workshop, EF ≙ Contact a qualified electrician								

Tab. 93 Regular maintenance tasks for options

10.3 Drive engine maintenance

➢ Carry out maintenance according to the schedules in chapter 10.2.

10.3.1 Coolant cooler maintenance

The maximum permissible service life of the coolant is 3 years. Upon expiration of its service life, the engine coolant must be changed.

Material
For suitable coolants, please see the instructions regarding initial filling, chapter 2.8.4.
Coolant tester
Cooler cleaning agent
Receptacle
Funnel
Cleaning cloth

Precondition
The machine is switched off.
The machine is standing on level ground,
the machine has cooled down.
All compressed air consumers are disconnected,
the discharge valves are open,
the machine is fully vented, the pressure gauge reads 0 psig!

⚠ WARNING

Risk of scalding from hot coolant!
Serious injuries can be caused by hot coolant.

➢ *Allow the machine to cool down before opening the cooling system.*

⚠ CAUTION

Risk of chemical burns from coolant containing antifreeze!

➢ *Avoid eye and skin contact with coolant. In case of contact, rinse immediately with running water.*

➢ *Wear protective glasses and protective gloves.*

NOTICE

Insufficient coolant levels can damage the machine!
Insufficient coolant levels will cause the engine to overheat. Overheating can cause serious damage to the engine.

➢ *Check the coolant level daily.*

➢ *Replenish the coolant as necessary.*

➢ Open the enclosure.

10.3.1.1 Checking the coolant level

The coolant level in the drive engine cooling circuit must be checked daily prior to start-up.
The level is checked via the coolant expansion tank:

- The tank is transparent so the coolant level can be seen from outside.
- The fluid level should be between the *minimum and maximum marks* when the engine is cool.

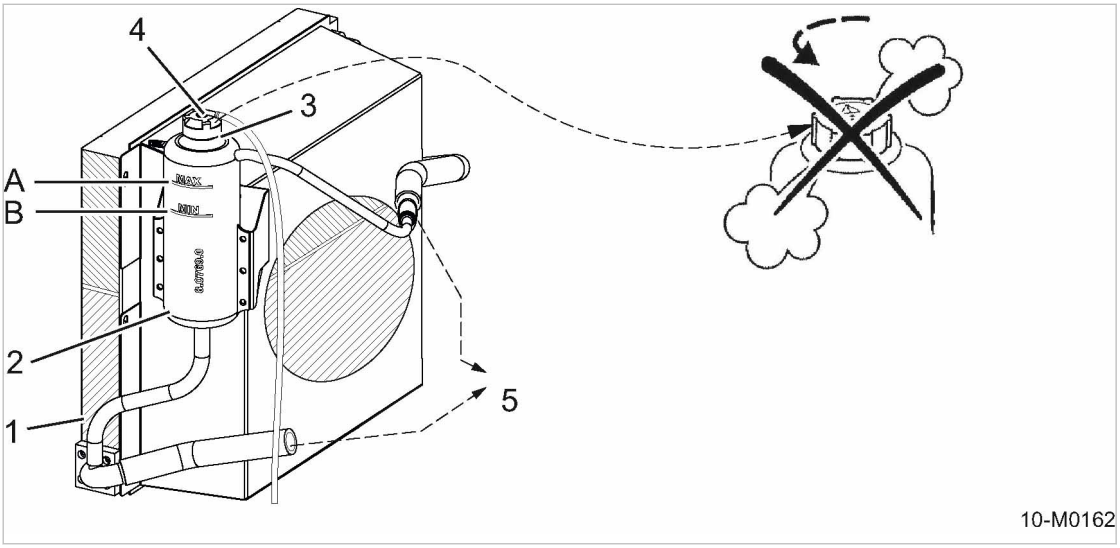

Fig. 30 Checking the coolant level

1	Coolant cooler	3	Filler neck with cap
2	Coolant expansion tank	4	Overflow
A	*Maximum mark* (FULL)	5	Connection hose to drive engine
B	*Minimum mark* (LOW)		

1. Check the coolant level inside the coolant expansion tank.
   When the coolant level falls below the *minimum mark* B: Replenish the coolant.
2. Close the enclosure.

Arrange for the cause of the coolant loss to be determined and rectified.

10.3.1.2 Checking the coolant

The coolant should be checked in line with the maintenance schedule to ensure quality and long service life.

Coolant quality can be determined by the following parameters:

- Visual check
- Antifreeze concentration measurement

➢ Unscrew and remove the expansion tank filler cap 3.

Performing a visual check:

The coolant should be checked for discoloration and any floating particles (flocculation).

➢ Take a coolant sample and analyze it.
   If the coolant is heavily discolored and/or contains floating particles: Change the coolant.

Measuring the antifreeze concentration:

A coolant tester (e.g. refractometer) is used to check the proportion of antifreeze in the coolant.

Maximum frost protection is ensured with an antifreeze concentration equal to 55% of the volume, as frost protection and heat transfer properties deteriorate beyond this point. A higher concentration also leads to higher operating temperatures for the drive engine.

1. **NOTICE** *The engine can be damaged if the antifreeze concentration is insufficient!*
   Corrosion.
   Damage to the cooling system.
   Engine housing fracture.
   - ➢ *Check the coolant.*
   - ➢ *Ensure frost protection for the coolant.*
   - ➢ *Replenish immediately if necessary.*
2. To test the coolant, use the coolant tester as instructed by the manufacturer.
   If the proportion of antifreeze is too low: Change the coolant.

Closing tasks:

1. Close the filler cap.
2. Close the enclosure.

10.3.1.3 Mixing the coolant

The coolant is a mixture of clean, fresh water with special additives (corrosion protection/antifreeze additives).

To protect against corrosion and raise the boiling point, the coolant must remain in the cooling system throughout the year.

Never use water without added coolant. Water alone is corrosive at drive engine operating temperature. Water alone does not offer sufficient protection from boiling or freezing of the coolant.

An adhesive label with the recommended mixture ratio for the coolant is fitted by the coolant expansion tank, see Figure 31.



Fig. 31 Recommended mixture ratio for coolant
[1] Anti-corrosion agent/antifreeze
[2] Water

➢ For recommended coolants, please see the instructions regarding initial filling, chapter 2.8.4!

Preparing the coolant:

Precondition The selected coolant corresponds to the prescribed operating instructions of the engine manufacturer KUBOTA.

➢ The coolant should be mixed in the proportions specified by the manufacturer.

Coolant mixture table:

Proportions [% vol.]		Frost protection to approx. [°F]
Anti-corrosion agent/anti-freeze	Water	
50	50	–35

Tab. 94 Coolant mixture table

Never use a higher concentration than 55% vol. of anti-corrosion agent/antifreeze, even at extremely low ambient temperatures. Maximum frost protection is achieved with 55% anti-corrosion agent/antifreeze. This corresponds to frost protection down to approx. –49°F.

The concentration of antifreeze should not be less than 33%, as corrosion protection can no longer be guaranteed and heat transfer properties deteriorate below this point!

10.3.1.4 Filling/replenishing the coolant

In order to ensure optimal frost and corrosion protection, and to prevent the build-up of residue (sludge) inside the cooling circuit, the proportion of antifreeze in the coolant must not fall below 33%. Replenishing solely with water dilutes the antifreeze concentration and is therefore prohibited.

Ensure that there is sufficient space for the coolant to expand without overflowing when hot.

Precondition The negative cable to the battery is disconnected.

1. Loosen and remove the coolant expansion tank filler cap.
2. Mix a quantity of coolant as per the table and replenish to the level indicated.
   Replenish the coolant to just below the *maximum mark* Ⓐ.
3. Close the filler cap.
4. Connect the negative cable to the battery.
5. Close the enclosure.
6. Start the engine and allow to run in IDLE for about 1 minute.
7. Stop the drive engine.
8. Open the enclosure.
9. Check the coolant level.
   If the coolant level in the expansion tank has decreased: Replenish the coolant.
10. Visually inspect for leaks.
11. Close the enclosure.

10.3.1.5 Draining the coolant

Precondition The machine has cooled down.
The negative cable to the battery is disconnected.

Draining the coolant:

The full volume of coolant contained in the cooling circuit can be drained via the drive engine coolant cooler. The coolant cooler is equipped with a coolant drain valve. Coolant is easily and conveniently drained away by screwing the male hose coupling onto the coolant drain valve.

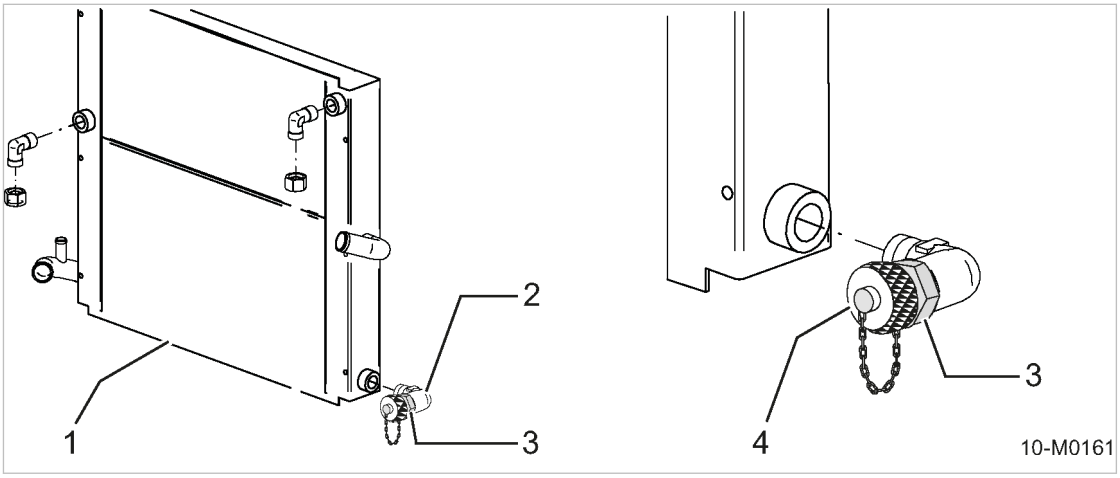

Fig. 32 Draining the coolant

[1] Coolant cooler
[2] Drainage port
[3] Coolant drain valve
[4] Protective cap

1. Loosen and remove the filler cap on the coolant expansion tank.
2. Position the receptacle.
3. Loosen and remove the protective cap for the coolant drain valve.
4. Screw the male hose coupling onto the coolant drain valve.
5. Allow the coolant to drain out.
   The coolant has drained completely.
6. Unscrew and remove the male hose coupling.
7. Screw the protective cap back onto the coolant drain valve.

➢ Dispose of used coolant in accordance with the applicable environmental protection regulations.

10.3.1.6 Removing scaling from inside the coolant cooler

After extended periods of use, scaling may form inside the cooling circuit, and the coolant cooler in particular. The resulting reduced heat transfer can lead to the drive engine overheating.

NOTICE

Scaling in the cooling circuit
Damage caused by engine overheating.

➢ *Use a cooler cleaning agent to remove scaling from inside the coolant cooler.*

1. Read and observe the manufacturer's instructions regarding the use of cooler cleaning agent.
2. Use a cooler cleaning agent to remove scaling from the coolant cooler.

Further information If the maintenance message "Change coolant" is displayed, use a cooler cleaning agent to remove scaling from inside the coolant cooler, see chapter 10.2.3.1.

10.3.2 Engine air filter maintenance

Clean the filter according to the maintenance schedule or if the maintenance indicator shows this to be necessary.

Replace the air filter element after 2 years at the latest or after it has been cleaned 5 times.

- Using the engine without an air filter element is not permitted!
- Do not use an air filter element with damaged folds or gasket.
- The use of an unsuitable air filter can permit dirt to ingress the engine and cause premature wear and damage.

Material
Compressed air for blowing out
Spare parts (as required)
Cleaning cloth

Precondition
The machine is shut down.
The machine is fully vented, the pressure gauge reads 0 psig.
The machine is cooled down.
All compressed air consumers are disconnected and the air outlet valves are open.

NOTICE

Damaged filter element.
Wear can occur in the engine from the intake of any contaminated air.

➢ *Do not try to clean the filter element by striking or knocking it.*

➢ *Do not wash the filter element.*

➢ Raise the cover.

Checking contamination of the air filter

Air filter maintenance is necessary when the yellow piston inside the maintenance indicator reaches the red zone.

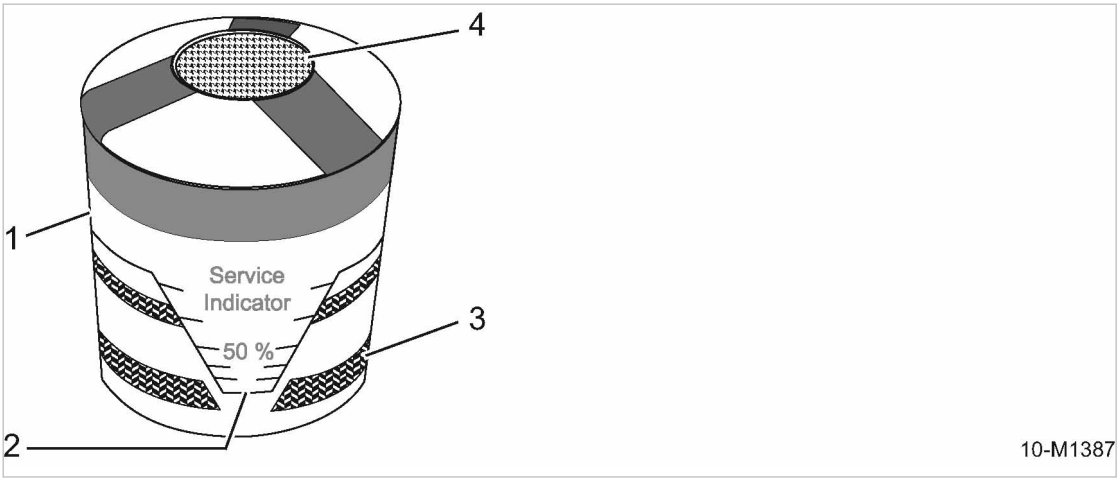

Fig. 33 Maintenance indicator

1 Maintenance indicator
2 Indicator piston
3 Red zone indicator scale
4 Reset knob

➢ Check the air filter maintenance indicator.
If the yellow piston reaches the red zone, clean or renew the filter element.

Cleaning the air filter:

The dust evacuator valve must be at the bottom. The dust evacuation valve [2] is on the filter cap.

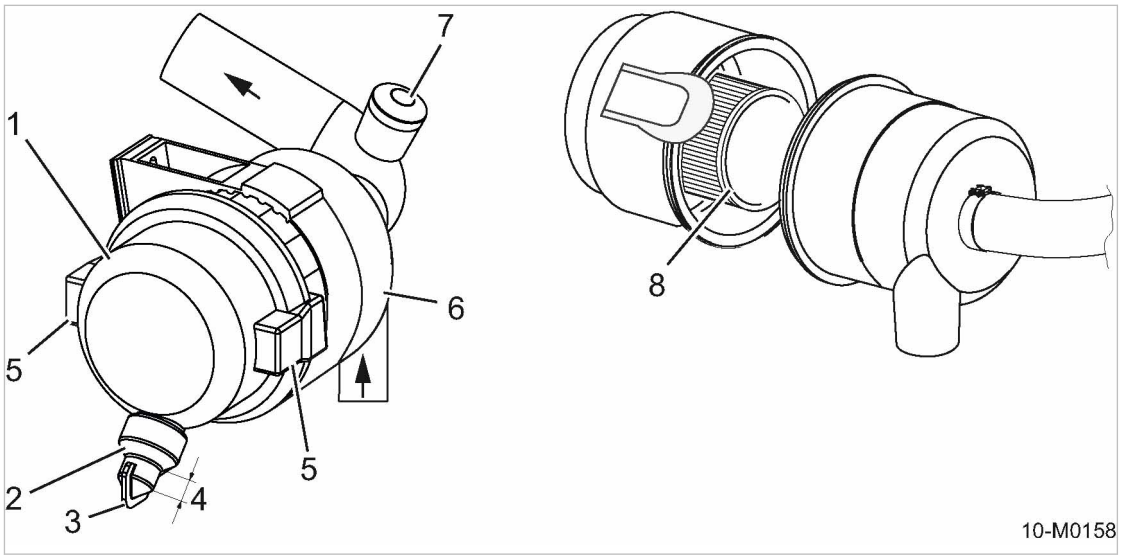

Fig. 34 Engine air filter maintenance

[1] Filter cap
[2] Dust evacuating valve
[3] Drain slit
[4] Valve part
[5] Spring retaining flap
[6] Filter housing
[7] Maintenance indicator
[8] Filter element

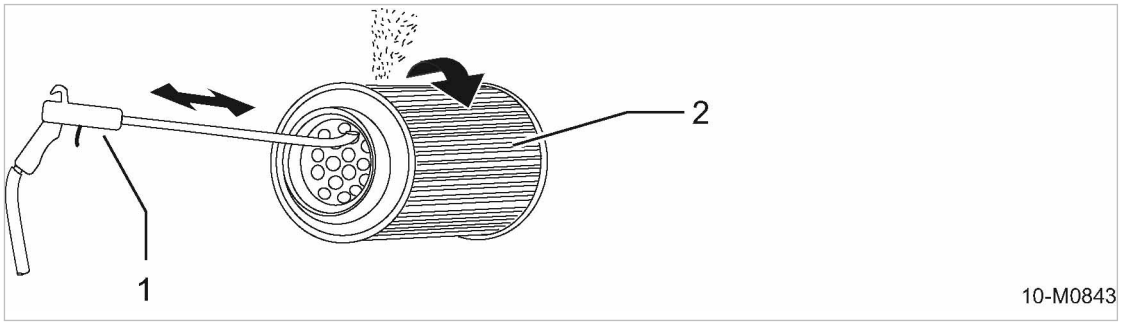

Fig. 35 Cleaning the filter element

[1] Compressed air gun with blast pipe bent to 90° at the end
[2] Filter element

1. Press both spring flaps together, lift the cap and remove the filter element.
2. Carefully clean the inside of the housing, the cover and sealing faces with a damp cloth.
3. Cleaning the filter element:
   - Use dry compressed air (≤ 72 psig!) at an angle to blow dust from the filter element from inside to outside until no further dust develops.
   - The blast pipe must be long enough to reach the bottom of the element.
   - The tip of the blast pipe should not be allowed to touch the element.
   - Clean sealing faces.

4. Inspect the element carefully for any damage.
   Replace any damaged filter element.
5. To empty the dust evacuator valve [2]:
   - Pinch the valve part [4] above the drain slit [3] (drain slit opens).
   - Remove any dust clumps.
   - Clean the slit.
6. Insert the cleaned or new filter element into the filter housing. Make sure it is properly in place and sealed by its gasket.
7. With the dust evacuator valve pointing to the bottom, place the filter cover in front of the filter casing.
8. Place the filter cap on the housing and press home.
9. Press on the cap until the spring retaining flaps snap home.

Resetting the maintenance indicator:

➢ Press the reset knob on the maintenance indicator a number of times.
The yellow piston within the indicator is reset and the maintenance indicator is ready for use again.

➢ Close the cover.



Dispose of old parts and contaminated materials according to environmental regulations.

10.3.3 Fuel system maintenance

Overview:

- Bleeding the fuel system
- Fuel system maintenance
  - Changing the fuel prefilter element
  - Replacing the filter cartridge of the fuel filter
  - Starting the machine and performing a test run
- Fuel/water separator maintenance (option)

Material
Spare parts
Receptacle
Cleaning cloth

Precondition
The machine is switched off.
The machine is standing level.
The machine has cooled down.
Air consumers are disconnected,
the outlet valves are open,
the machine is fully vented, the pressure gauge reads 0 psig.
The negative cable to the battery is disconnected.

⚠ DANGER

Fire hazard from spontaneous ignition of fuel!
Serious injury or death could result from the ignition and combustion of fuel.

- ➢ *Allow no open flames or sparks at the place of use.*
- ➢ *Stop the drive engine.*
- ➢ *Wipe up escaped fuel.*
- ➢ *Keep fuel away from hot machine parts.*
- ➢ *Ensure that the maximum ambient temperature is not exceeded at the place of use.*

⚠ To ensure proper function of the fuel system no dirt particles may enter the fuel system. Before dismantling components for maintenance thoroughly clean these components, as well as their immediate vicinity.

➢ Follow all instructions.

10.3.3.1 Bleeding the fuel system

The electric fuel pump is used to bleed the system. The negative battery cable must be connected for the pump to operate and bleeding to be carried out.
When the «starter switch» is turned to the "II" position, the pump starts and bleeds the fuel system. The drive engine is not started!

Air can find its way into the fuel system under certain conditions or during maintenance tasks:

- Fuel tank empty.
- Replacing the filter element/fuel filter cartridge of:
  - Fuel prefilter
  - Fuel filter
- Replacing the fuel pump
- Work on the fuel lines

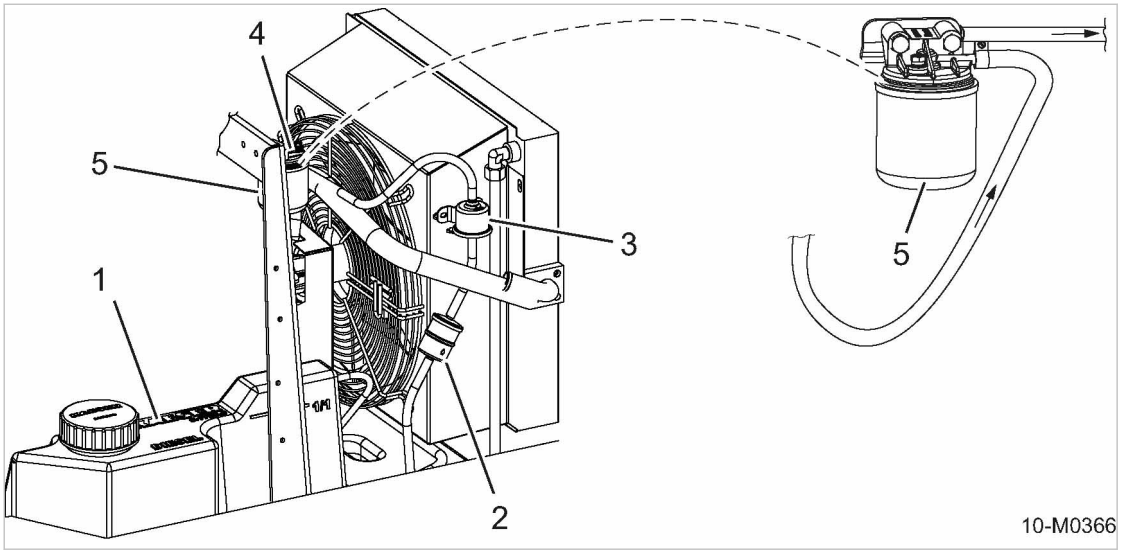

Fig. 36 Bleeding the fuel system

1 Fuel tank
2 Fuel prefilter
3 Electric fuel pump
4 Fuel filter head
5 Fuel filter element

1. Reconnect the negative cable to the battery.
2. Turn the «starter switch» to the “II” position and hold it there.
   The fuel system is bled.
3. Turn the «starter switch» to the “0” position.
   The venting process is completed.
4. Disconnect the negative cable on the battery.

10.3.3.2 Filter maintenance

Changing the fuel prefilter element

The fuel filter element is a wear part and must be replaced at regular intervals, see maintenance schedule, chapter 10.2.

Precondition The negative cable to the battery is disconnected!



Fig. 37 Fuel prefilter maintenance

1 Fuel line
2 Hose clamp
3 Fuel prefilter

1. Place the receptacle under the fuel prefilter.
2. Loosen the hose clamp of the fuel line on the filter cap.
3. Pull off the fuel line.
4. Catch fuel in the receptacle.
5. Loosen and remove the fuel prefilter cap.
6. Remove the filter element.
7. Insert the new filter element.
8. Replace and fasten the fuel prefilter cap on the lower part.
9. Connect the fuel line to the cap.
10. Tighten the hose clamp to the fuel line.
11. Bleed the system as described previously.

Dispose of fuel and any materials and components contaminated with it in accordance with environmental protection regulations.

Replacing the fuel filter cartridge of the fuel filter

The fuel filter cartridge is a wear part and must be replaced at regular intervals, see maintenance schedule, chapter 10.2.

Tools customary in the trade, such as filter wrench or belts may be used in order to loosen the old fuel filter cartridge for removal. The new fuel filter cartridge, however, may only be installed and tightened by hand force.

Precondition The negative cable to the battery is disconnected!

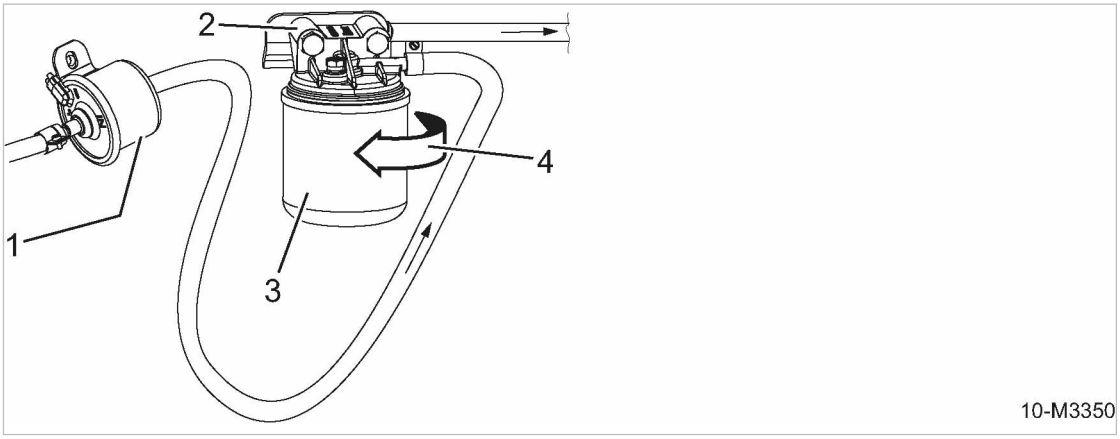

Fig. 38 Changing the filter cartridge

[1] Electric fuel pump
[2] Fuel filter head
[3] Fuel filter element
[4] Direction of arrow

1. Place the receptacle under the fuel filter element [3].
2. Turn the old fuel filter element in the direction of the arrow [4] in order to loosen it.
3. Allow fuel to drain.
4. Remove the old fuel filter element.
5. Clean the fuel filter head and sealing face.
6. Smear diesel fuel on the gasket of the new fuel filter cartridge.
7. Set new fuel filter element into installation position.

8. Turn the new fuel filter element clockwise using only hand force until the gasket fits tightly on the sealing surface.
9. Tighten new fuel filter element by hand force.
10. Bleed the system as described previously.

Dispose of old fuel filter element, fuel and any materials contaminated with it in accordance with environmental protection regulations.

Starting the machine and performing a test run

1. Switch the machine on and run it in IDLE mode for approx. 1 minute.
2. Visually check the fuel system for leaks.
3. Switch off the machine.
4. Re-tighten screw connections.

10.3.3.3 Option ne
Fuel/water separator maintenance

The fuel/water separator is positioned between the fuel tank and the fuel pump. It protects the fuel pump against water deposits and against premature wear.

Here, the fuel/water separator is fitted with an additional fuel filter.

Standard tools, such as filter wrench or belts may be used in order to loosen the old fuel filter for removal. The new fuel filter, however, may only be installed and tightened by hand force.

Material
Wrench
Receptacle
Cleaning cloth

Precondition
The machine is switched off.
The machine is installed on level ground,
the machine has cooled down.
Air consumers are disconnected,
the outlet valves are open,
the machine is fully vented, the pressure gauge reads 0 psig.
The negative cable to the battery is disconnected.

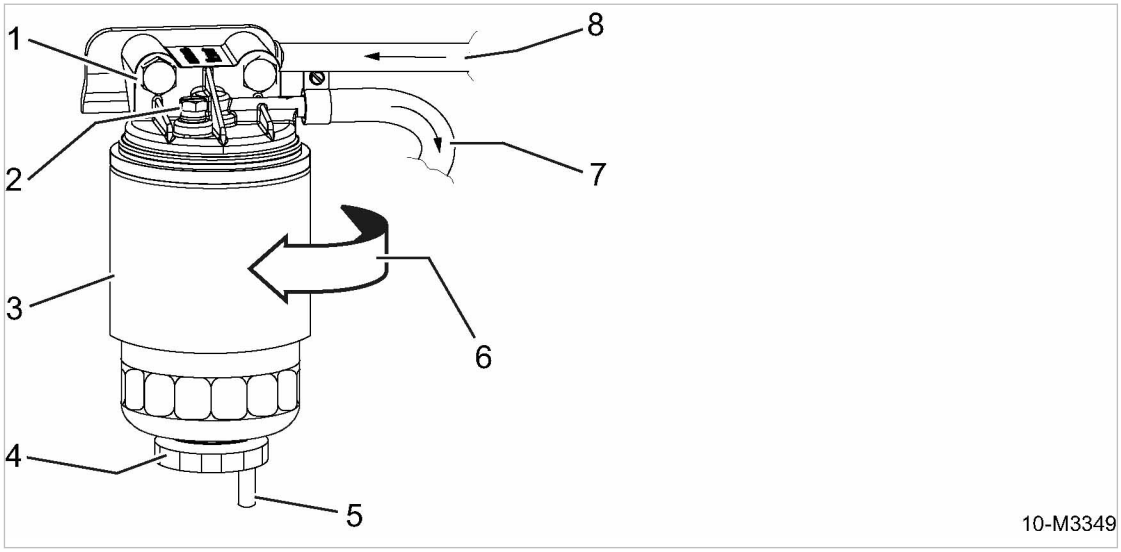

Fig. 39 Fuel/water separator

[1]	Fuel filter head	[5]	Drain pipe
[2]	Venting screw	[6]	Direction of arrow
[3]	Fuel filter	[7]	Fuel outlet
[4]	Hand wheel	[8]	Fuel inlet

Emptying the fuel/water separator

The fuel/water separator must be emptied at regular intervals, see maintenance schedule options, chapter 10.2.

1. Place a receptacle under the water separator fuel filter.
2. Loosen the venting screw [2] on the fuel filter head.
3. Loosen the hand wheel [4] to open the drain pipe.
4. Drain separated water and dirt particles into the receptacle.
5. Tighten the hand wheel to close the drain pipe.
6. Tighten the venting screw.

If the venting screw is open, air will continuously flow into the fuel system during the subsequent ventilation process.

7. Connect the negative cable to the battery.
8. Close the enclosure.

Dispose of fuel and any materials contaminated with it in accordance with environmental protection regulations.

Replace the fuel filter

The fuel filter is a wear part and must be replaced at regular intervals, see maintenance schedule, chapter 10.2.

Precondition Spare part is available.
The old fuel/water separator has been emptied.

1. In order to loosen the old fuel filter, turn the old fuel filter in the direction of the arrow [6].

2. Remove the old fuel filter.
3. Clean the fuel filter head and sealing face.
4. Smear diesel fuel on the gasket of the new fuel filter.
5. Set new fuel filter into installation position.
6. Turn the new fuel filter clockwise using only hand force until the gasket fits tightly on the sealing surface.
7. Tighten the new fuel oil filter by hand force.
8. Check if the venting screw on the fuel filter head is tightened.
9. If necessary, tighten the venting screw.
10. Connect the negative cable to the battery.
11. Close the enclosure.



Dispose of old fuel filter, contaminated fuel and any materials contaminated with fuel in accordance with environmental protection regulations.

Bleeding the fuel system

Precondition Negative cable to the battery connected.

➢ Bleed the fuel system, see bleeding process, chapter 10.3.3.

Starting the machine and performing a test run

1. Switch the machine on and run it in IDLE mode for approx. 1 minute.
2. Visually check the fuel system for leaks.
3. Switch off the machine.
4. Re-tighten screw connections.

10.3.4 Changing the engine oil

The engine oil should be changed:

- according to the maintenance schedule,
- according to the degree of contamination of the intake air,
- at least once a year.

Material New engine oil, see chapter 2.8.5 for engine oil filling quantity.
Receptacle
Hose coupling
Cleaning cloths
Funnel

Precondition The machine is shut down,
the machine is standing level,
the machine is fully vented, the pressure gauge reads 0 psig,
the engine is at operating temperature,
all compressed air consumers are disconnected and the air outlet valves are open,
the negative cable to the battery is disconnected.

⚠ CAUTION

Danger of burns from hot components and escaping engine oil!

➢ *Wear long-sleeved clothing and protective gloves.*

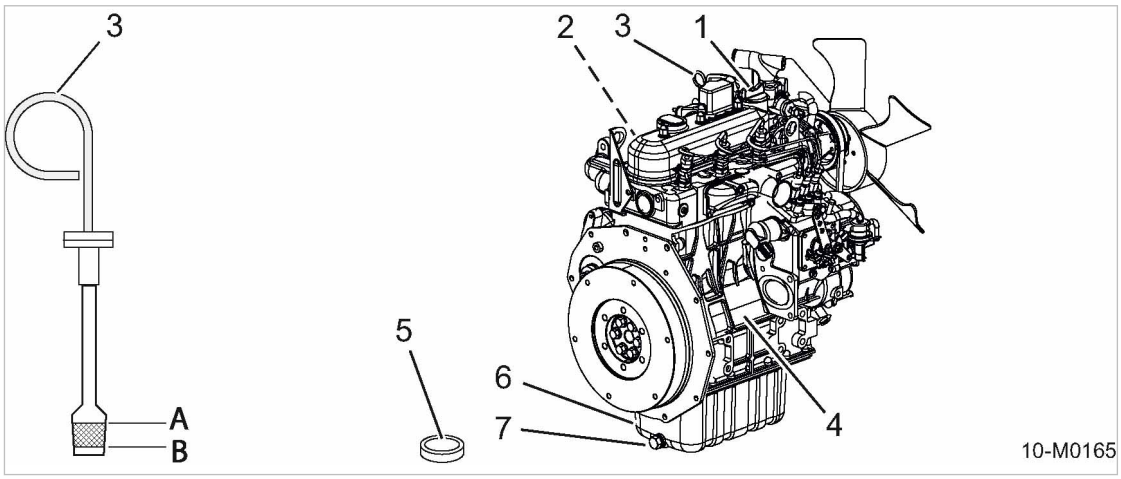

Fig. 40 Changing the engine oil

1 Oil filler cap
2 Oil filter
3 Oil dipstick
4 Engine block
5 Oil-tight plug
6 Engine oil sump
7 Oil drain valve

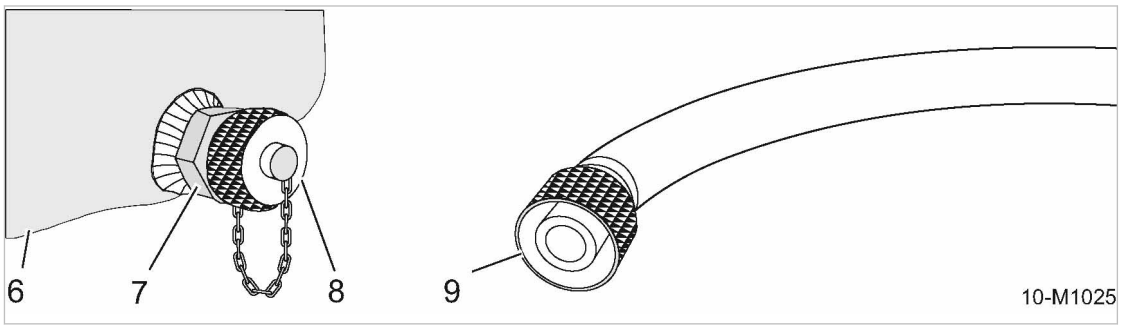

Fig. 41 Oil drain valve

6 Engine oil sump
7 Oil drain valve
8 Protective cap
9 Hose coupling

Draining the engine oil

The engine oil sump is equipped with an oil drain valve.
The oil drain valve is positioned next to the engine oil sump and the cooler.
Drain the oil by screwing the hose coupling on the oil drain valve.

	Machine status	Oil drain valve status	Protective cap	Hose coupling
1	Mode (machine runs)	closed	connected	removed
2	Oil drain (machine does not run)	open	removed	connected

Tab. 95 Oil drain valve

1. Unscrew and remove the oil-tight plug [5].
2. Place the oil receptacle below the corresponding drain hole in the floor pan.
3. Pass the loose end of the drain hose through the opening in the floor pan.
4. Place the end of the hose in a suitable container.
5. Unscrew and remove the oil filler cap [1].
6. Loosen and remove the protective cap[8].
7. Screw the hose coupling [9] onto the oil drain valve.
   Engine oil drains.
8. Unscrew and remove the hose coupling.
   The oil drain valve is again closed.
9. Replace the protective cap.
10. Re-insert the oil-tight plug and tighten.



Dispose of old oil and oil-soaked working materials according to environmental protection regulations.

Filling with engine oil

Precondition The oil drain valve is closed.
Unscrew the protective cap from the drain valve.

1. Pour in the specified volume of fresh oil into the oil filler.
2. Screw on the filler cap [1].

Checking the engine oil level



It takes a few minutes for oil to reach the sump.
Wait 5 minutes then use the oil dipstick [3] to check the oil level.
The level must be between marks A and B.

1. Pull out the oil dipstick [3], wipe it clean and reinsert it.
2. Pull out the oil dipstick once more and read off the oil level.
3. Top off if the level is too low.
4. Reconnect the negative cable to the battery.

Starting the machine and performing a test run

1. Start the machine and allow it to IDLE for at least 5 minutes.
2. Check the engine oil level.
   Top off as necessary.
3. Visually inspect for leaks.
4. Shut down the machine.

10.3.5 Changing the engine oil filter

Material
Spare parts
Common tools
Cleaning cloths
Oil receptacle

Precondition
The machine is shut down,
the machine is fully vented, the pressure gauge reads 0 psig,
the engine is cooled down,
all compressed air consumers are disconnected and the air outlet valves are open.

⚠ CAUTION

Danger of burns from hot components and escaping engine oil!

➢ *Wear long-sleeved clothing and protective gloves.*

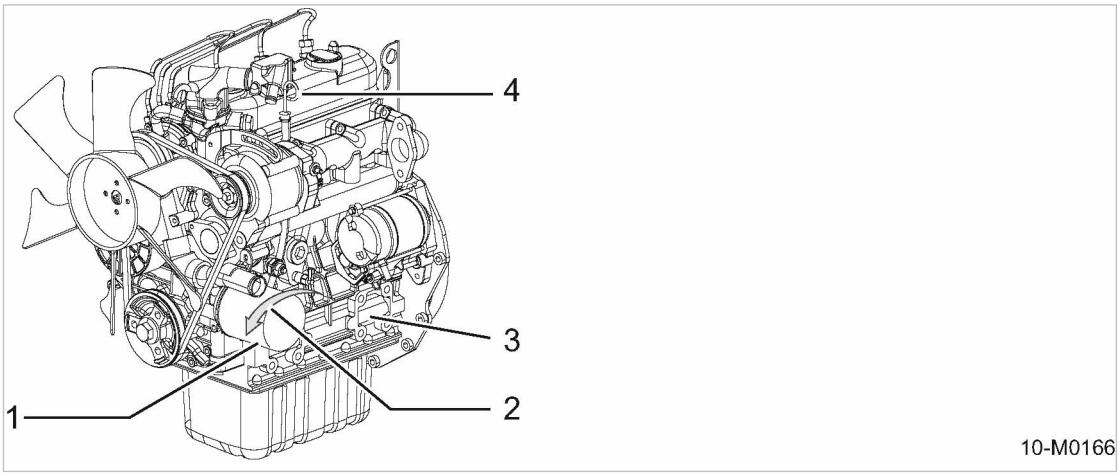

Fig. 42 Changing the engine oil filter

[1] Engine oil filter
[2] Direction of rotation to unscrew the filter
[3] Engine
[4] Oil dipstick

1. Open the canopy.
2. Prepare a receptacle.
3. Note the direction of rotation [2] to unscrew the oil filter.
4. Unscrew the engine oil filter [1]. Catch any escaping oil.
5. Carefully clean sealing surfaces using lint-free cloth.
6. Lightly oil the new filter's gasket.
7. Turn the oil filter clockwise by hand to tighten.
8. Check the engine oil level.
   Low oil level: Replenish engine oil.
9. Close the canopy.

Dispose of old oil filters, old oil and materials contaminated with oil according to environmental protection regulations.

10.3.6 Drive belt maintenance

The life of the drive belts is influenced by belt tension.

- Slack belts can slip and become damaged and may result in engine overheating.
- Over-tight belts stretch and wear quicker. Over-tight belts also place unnecessary stress on bearings and shorten their life.

Material V-belt tension measuring device
Spare parts

Precondition The machine is shut down,
the machine is fully vented, the pressure gauge reads 0 psig,
the machine is cooled down,
all compressed air consumers are disconnected and the air outlet valves are open,
negative cable to the battery is disconnected.

⚠ WARNING

Beware of rotating pulleys and moving belts!
There is danger of serious injury from pinching.

➢ *Never check the drive belts unless the engine is at standstill.*

➢ *Never run the machine without a belt guard.*

➢ Open the canopy.

10.3.6.1 Visual inspection

Precondition Belt guard is removed.

1. Check the belt thoroughly for cracks, fraying or stretching.
   When damaged or worn: Replace the drive belt immediately.
2. Replace the belt guard.
3. Reconnect the negative battery terminal.
4. Close the canopy.

10.3.6.2 Checking belt tension

Check belt tension when the belts are warm, not hot, to avoid length variations through temperature.

The engine manufacturer recommends a tension measuring device for belts. See the engine service manual.

The belt tension may also be checked by hand if no tension measuring device is available.

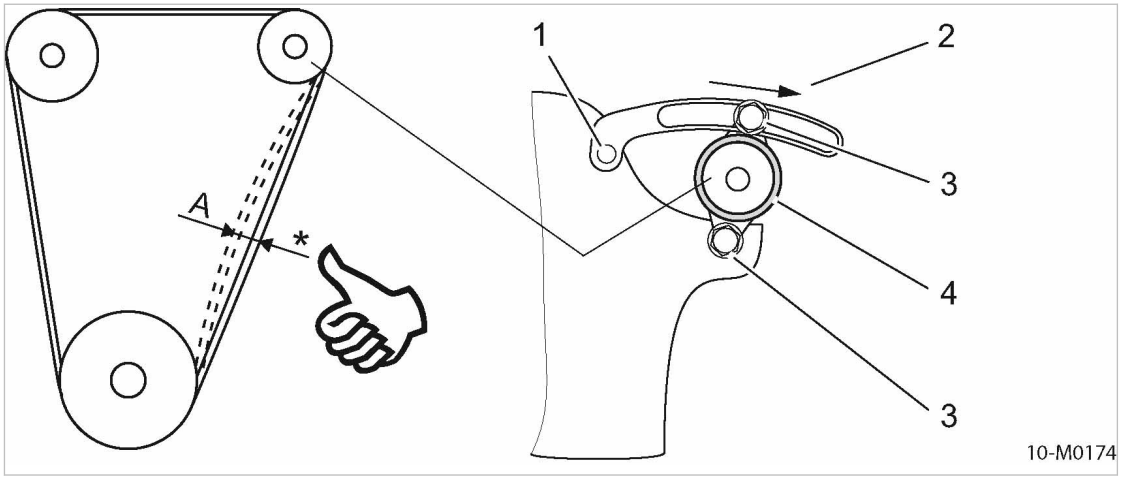

Fig. 43 Checking belt tension by hand

[A] Permissible deflection of the belt
[*] Approximate pressure exerted: 22 lb
Permissible movement: 0.4 – 0.6 inches
[1] Engine block mounting
[2] Direction of arrow
[3] Engine alternator screw
[4] Engine alternator

Checking and resetting belt tension with tension measuring device:	Checking and resetting belt tension manually:
1. Remove the belt guard.	1. Remove the belt guard.
2. Check belt tension with the tension measuring device.	2. Using your thumbs, push the belt between the belt pulleys (see illustration 43).
3. Tensioning a loose belt: ■ Loosen both securing screws [3] on the engine alternator [4]. ■ Using a suitable lever, pull the engine alternator in the direction of the arrow [2] until the correct belt tension is achieved. ■ Retighten both securing screws [3].	3. Tensioning a loose belt: ■ Loosen both securing screws [3] on the engine alternator [4]. ■ Using a suitable lever, pull the engine alternator in the direction of the arrow [2] until the correct belt tension is achieved. ■ Retighten both securing screws [3].
4. Replace the belt guard.	4. Replace the belt guard.
5. Reconnect the negative battery terminal.	5. Reconnect the negative battery terminal.

Changing the drive belt

1. Loosen both screws [3] at the engine alternator [4].
2. Press the engine alternator in opposite direction of the arrow.
   The drive belt is free of tension.
3. Pull the drive belt.
4. Check the pulleys for dirt and wear.
   - Dirty pulley: Clean pulley.
   - Worn pulley: Change the pulley.
5. Manually route the new drive belt over the pulleys without using force.
6. Using a suitable lever, pull the engine alternator in the direction of the arrow [2] until the correct belt tension is achieved.
7. Retighten both securing screws [3].

A belt that has been replaced may not be used again.
Check the belt tension after running for approximately 15 minutes.

Old belts should be disposed of in accordance with current environmental regulations.

Putting in operation

1. Replace the belt guard.
2. Reconnect the negative battery terminal.
3. Close the canopy.

10.3.7 Having the anti-vibration mount checked

Anti-vibration mounts are elastomer metal elements, that are used, for example, for vibration-dampened bearing of the drive of construction machines. They consist of two U-profiles that are fastened to each other through an elastomer.

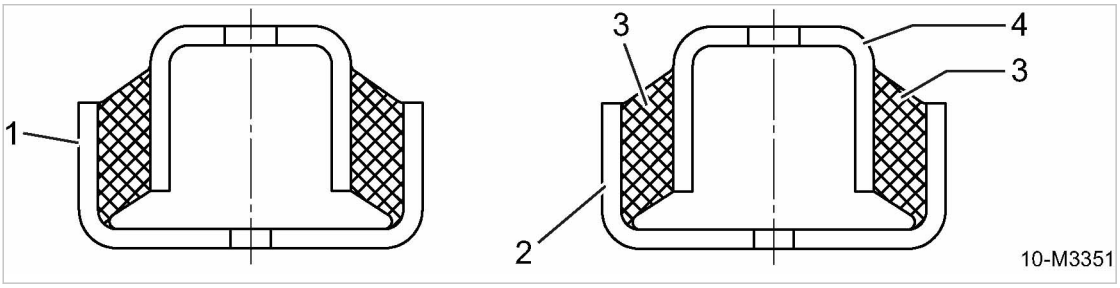

Fig. 44 Example for anti-vibration mount of drive engine

[1] Anti-vibration mount
[2] Bottom U-profile
[3] Elastomer
[4] Top U-profile

➢ Have the anti-vibration mount of the drive engine checked by an authorized KAESER service representative.

Elastomer of anti-vibration mount is destroyed or porous.

➢ Have the anti-vibration mount replaced by an authorized KAESER service representative.

10.3.8 Battery maintenance

➢ Check the charging system if the battery discharges without a reason.

10.3.8.1 Safety

⚠ WARNING

Danger of acid burns from escaping electrolyte!

- ➢ *Wear appropriate protective clothing including acid-proof rubber gloves.*
- ➢ *Always wear eye and face protection.*
- ➢ *Do not tip the battery. Electrolyte may run out of the vent holes.*
- ➢ *Work with caution.*

When working on the battery comply with the following safety signs:

A warning label with safety signs is attached to the battery.

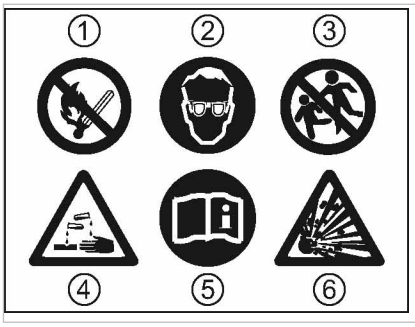

10-M0167

Fig. 45 Safety signs - warning stickers on the battery

➢ Take heed of any safety signs on the battery warning labels.
The individual safety signs have the following meaning:
- 1 – Fire, sparks, open flame and smoking are forbidden!
- 2 – Eye and face protection must be worn. Danger of acid burns!
- 3 – Keep children well away from batteries and electrolyte!
- 4 – Wear protective gloves, batteries are filled with caustic electrolyte!
- 5 – Observe the battery manufacturer's instructions!
- 6 – Follow safety rules, explosion hazard!

Further instructions on working with batteries:

➢ Do not remove battery terminal covers unnecessarily.
➢ Do not lay tools on the battery. This can lead to short circuits, overheating, and battery bursting.
➢ Take particular care when the battery has been in service for a long time or has just been charged as highly explosive gas is emitted!
Ensure adequate ventilation!

10.3.8.2 Ensure the batteries are charged

The battery may be subject to self-discharge if the machine has been out of operation for an extended period. The starting voltage is insufficient to start the engine when needed. Moreover, exhaustive discharge of the battery can result in battery damage.

⚠ *Always consider the following for starter batteries:*
Recharge if stored for 30 days or longer!

1. Check the battery charge.
2. If required, recharge the battery with corresponding charging device.

10.3.8.3 Battery checking and care

Even 'maintenance-free' batteries need a degree of care to obtain their maximum operational life.

The housing and the battery connections must not be cleaned with hard objects, e.g. a wire brush!

The outside of the battery and the terminals should be cleaned regularly with a soft cloth.

This avoids current leaks and minimizes the discharge rate.

Material
Terminal grease
Distilled water
Cleaning cloth
Protective gloves
Eye protection

Precondition
The machine is shut down.
The machine is standing level.
The machine is fully vented, the pressure gauge reads 0 psig.
The machine has cooled down.

1. Open the canopy.
2. Clean the casing and terminals. Do not use a wire brush!
3. Lightly grease the terminals to prevent corrosion.
4. Check that the batteries and cable connections are properly seated and tighten if necessary.

Check the battery electrolyte level:

The fluid is generally sufficient for the life of the battery. Nevertheless, the fluid level should be checked annually. The level should be up to the mark, 0.4 inches above the plates.

Replace the battery immediately if the casing leaks!

1. **NOTICE** *Battery destruction!*
   Topping off with pure acid will increase the electrolyte concentration and can destroy the battery.
   ➢ *Top off only with distilled water.*
2. Check the electrolyte level.

If the level does not reach the mark -
➢ Top off with distilled water.

➢ Close the canopy.

Winter operation:

Batteries are particularly stressed in winter. Only a fraction of the normal starting energy is available at low temperatures.

1. **NOTICE** *Danger of batteries freezing!*
   Discharged batteries are subject to frost damage and can freeze at 14 °F.
   ➢ *Check battery charge with a specific gravity tester.*
   ➢ *Recharge the battery.*
   ➢ *Clean the battery terminals and wipe with grease.*
2. Check the battery charge weekly.
   Recharge as necessary.

3. If the machine is to be unused for a number of weeks, remove the battery and store in a frost proof room.



In extreme cases, the use of heavy-duty cold-start batteries and/or additional batteries is recommended.

10.3.8.4 Battery removal and installation

Precondition The machine is shut down.
The machine is standing level.
The machine is fully vented, the pressure gauge reads 0 psig.
The machine is cooled down.

1. **⚠ WARNING** *There is danger of batteries bursting!*
   If a battery short circuits it will overheat and can burst.
   - ➢ *Never short-circuit a battery (e.g. with a hand tool).*
   - ➢ *Wear protective gloves and eye protection.*
2. **NOTICE** *Excessive voltage produced by the alternator!*
   Voltage peaks can destroy the alternator regulator and diodes.
   - ➢ *The battery serves as a buffer and must not be disconnected while the engine is running.*
   - ➢ *Carry out work on batteries only with the machine shut down.*
3. Open the canopy.
4. Disconnect the negative cable first, then the positive cable.
5. Unscrew the battery fixing clamp.
6. Replace in the reverse order.
7. Make sure the battery is properly secured.
8. Close the canopy.

Battery replacement:

If the battery is to be replaced, the new battery should have the same capacity, current rating, and shape as the original battery.

- ➢ Always replace a battery with one of the same type.



Old batteries are hazardous waste and must be disposed of correctly in accordance with local environmental protection regulations.

10.3.9 Checking the fastening of the fuel tank

The machine is equipped with a fuel tank or tanks. These are fastened with lashing strips and ratchets.

Precondition The machine is shut down,
the machine is standing level,
the machine is fully vented, the pressure gauge reads 0 psig,
the machine is cooled down,
all compressed air consumers are disconnected and the air outlet valves are open.

NOTICE

The lashing strip of the fuel tank is overly tightened!
The plastic tank can be damaged by excessive tightening of the lashing strips.
The fuel tank may burst and spill.

➢ *Do not overtighten the lashing strips.*

➢ *Slightly hand-tighten the lashing strips.*

Carrying out visual check

1. Check the lashing strips for tears and fraying in the fabric, and for damages to the ratchet.
   Change any damaged lashing strip immediately.
2. Check whether the lashing strips are tight with the tank and that the ratchet is closed.
   If the lashing strips sits loose, or the ratchet is not closed properly, tighten the fastening.

Tightening the fastening of the fuel tank

The lashing strips are tensioned via the integrated ratchet.

The lashing strips must fit closely around the fuel tank. The tensioning force of the strips must not exceed 10 daN (approx. 25 lbf), slightly hand-tighten only.

➢ Hand-tighten the lashing strip with the integrated ratchet and push the ratchet to the strip.

10.4 Compressor Maintenance

➢ Perform maintenance tasks according to the schedule in chapter 10.2.3.1.

10.4.1 Checking cooling oil level

The oil level is checked at the oil separator tank filling port. Oil should be visible in the port when the filler plug is removed.

Material: Wrench
Cleaning cloth

Precondition: The machine is shut down.
The machine is standing level.
The machine is fully vented, the pressure gauge reads 0 psig.
All compressed air consumers are disconnected and the air outlet valves are open.

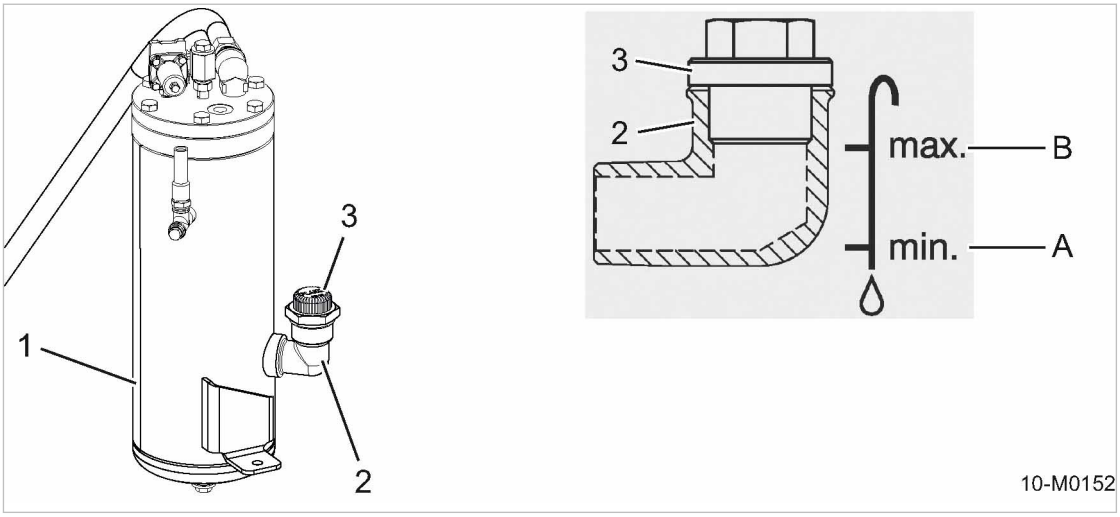

Fig. 46 Checking cooling oil level

[1] Oil separator tank
[2] Oil filler port
[3] Filler plug
[A] Mark for minimum oil level
[B] Mark for maximum oil level

1. Open the canopy.
2. Slowly unscrew and withdraw the plug from the oil filler port.
3. Check the cooling oil level.
   Top up if no oil is visible.
4. Replace the plug in the filler port.
5. Close the canopy.

10.4.2 Filling or topping off the cooling oil

Material
Cooling oil
Funnel
Cleaning cloth
Wrench

Precondition
The machine is shut down.
The machine is standing level.
The machine is fully vented, the pressure gauge reads 0 psig.
Machine is cooled down.
All compressed air consumers are disconnected and the air outlet valves are open.
The negative cable to the battery is disconnected.

Filling with cooling oil

A sticker on the oil separator tank specifies the type of oil used.

1. **NOTICE** *The machine could be damaged by unsuitable oil.*
   - ➢ *Never mix different types of oil.*
   - ➢ *Never top off with a different type of oil than that already used in the machine.*
2. Open the canopy.

3. Slowly unscrew and withdraw the plug from the oil filler port.
4. Top off the cooling oil to the maximum level (B) with the help of a funnel.
5. Check the oil level.
6. Check the filler plug gasket for damage.
   Change a damaged gasket.
7. Replace the plug in the filler port.
8. Reconnect the negative battery terminal.
9. Close the canopy.

Starting the machine and performing a test run:

1. Start the machine and run in IDLE until the operating temperature is reached.
2. Close the outlet valves.
3. Shut down the machine.
4. Wait until the machine has automatically vented.
   Pressure gauge reads 0 psig!
5. Open the outlet valves.
6. Open the canopy.
7. Check the oil level after about 5 minutes.
   Top up if necessary.
8. Carry out a visual check for leaks.
9. Close the canopy.

10.4.3 Changing the cooling oil

Drain the oil completely from the following components:

- Airend
- Oil separator tank
- Oil cooler
- Oil pipes

➢ Always change the oil filter when changing the oil.

Material
See chapter 10.4.3 for oil filling volume.
Receptacle
Hose coupling is disconnectedly laying at the machine.
Funnel
Cleaning cloth

Precondition
The machine is shut down.
The machine is standing level.
The machine is fully vented, the pressure gauge reads 0 psig.
The machine is at operating temperature.
All compressed air consumers are disconnected and the air outlet valves are open.
The negative cable to the battery is disconnected.

⚠ CAUTION

Risk of burns from hot components and escaping oil!

➢ *Wear long-sleeved clothing and protective gloves.*

➢ Open the cover.

10.4.3.1 Draining the cooling oil

To drain the entire cooling oil from the machine, you must remove the screw plugs of the oil separator tank and open the oil drain valve of the airend. If the machine is fitted with a closed floor pan, you must remove the bungs from the floor panel.

- If necessary, remove the bungs from the floor panel.
- Remove the screw plug from the oil filler of the oil separator tank.
- Remove the screw plug from the tank floor of the oil separator tank.
- Open the oil drain valve at the airend.
- Remove the oil filter.

➢ Comply with all instructions.

Draining the oil from the separator tank

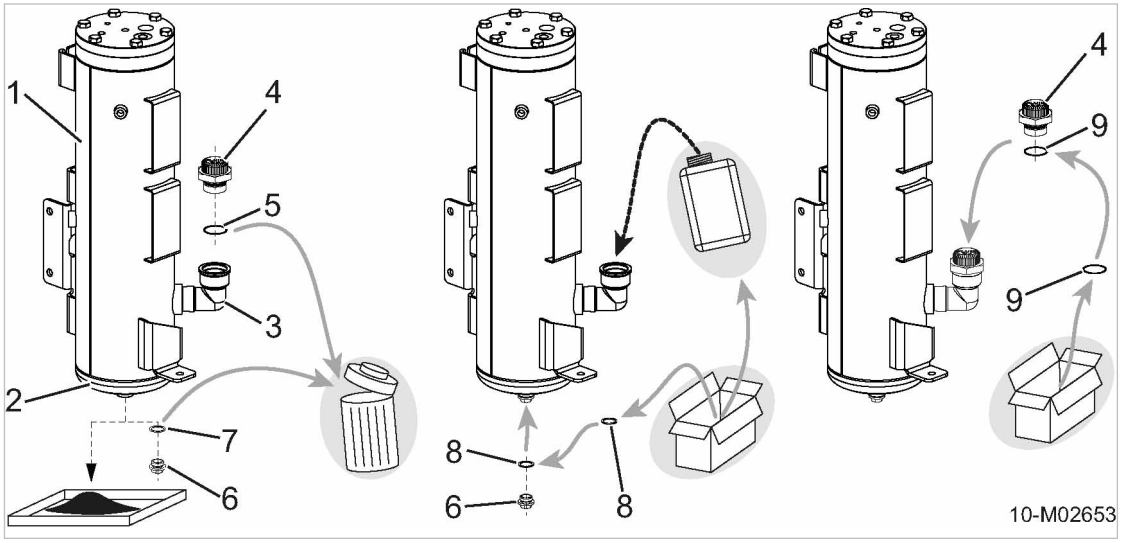

Fig. 47 Plugs, oil separator tank

[1]	Oil separator tank	[6]	Screw plug
[2]	Tank floor, oil separator tank	[7]	Gasket
[3]	Oil filler port	[8]	New gasket
[4]	Screw plug	[9]	New gasket
[5]	Gasket		

1. Position a receptacle beneath the oil separator tank (accessible through a hole in the floor panel).
2. Remove the screw plug from the oil filler port of the oil separator tank.
3. Remove the gasket at the oil filler port.
4. Dispose of the old gasket.
5. Loosen and remove the screw plug from the tank floor of the oil separator tank.

6. Remove the gasket at the tank floor of the oil separator tank.
7. Dispose of the old gasket.

Result Cooling oil drains.

Draining the cooling oil from the airend

For more convenience, an oil drain valve has been installed for draining cooling oil from the airend. Remove the protective cap prior to draining oil. The cap protects the oil drain valve from contamination. Drain the oil by screwing the hose coupling on the oil drain valve.

	Machine status	Protective cap	Hose coupling	Oil drain valve status
1	Mode (machine runs)	Connected	Is supplied with the machine as accessory.	Closed
2	Oil drain (Machine de-commissioned)	Removed	Connected	Open

Tab. 96 Oil drain valve

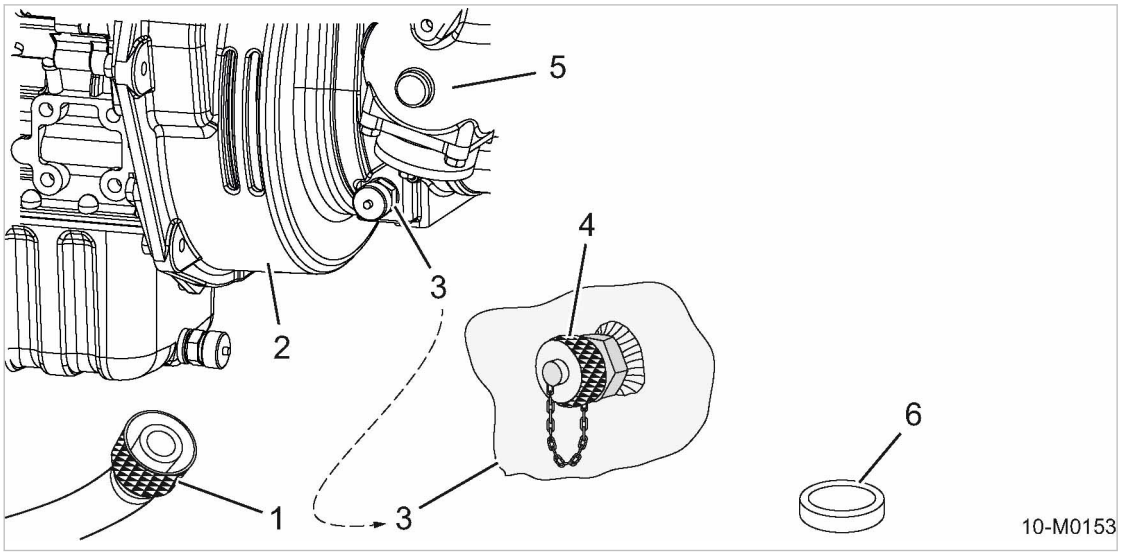

Fig. 48 Draining the compressor cooling oil

[1] Hose coupling
[2] Compressor block
[3] Oil drain valve
[4] Protective cap
[5] Inlet valve
[6] Bung

1. Position a receptacle beneath the airend (accessible through a hole in the floor panel).
2. Feed the free end of the hose through the opening in the floor panel.
3. Suspend and fasten the free end of the hose in the receptacle.
4. Turn and detach the protective cap [4] of the oil drain valve.
5. Screw the hose coupling [1] onto the oil drain valve [3].

Result Cooling oil drains.

Removing the oil filter component

➢ Remove the oil filter (see chapter 10.4.4).

Draining the machine's cooling oil

➢ Drain the entire cooling oil from the machine at operating temperature.
If the machine is at operating temperature, the oil cooler is automatically emptied.

Closing the drain opening of the oil separator tank

1. Turn the screw plug with a new gasket into the floor panel of the oil separator tank.
2. Tighten the plug.

Result The drain opening of the oil separator tank is closed.

Closing the oil drain valve of the airend

1. Unscrew and remove the hose coupling.
The oil drain valve is closed.
2. Close the oil drain valve with the protective cap.

Installing the oil filter component

➢ For installing the new oil filter, see chapter 10.4.4.

Filling with cooling oil

1. Fill new cooling oil into the oil filler port of the oil separator tank.
2. Turn the screw plug with a new gasket into the oil filler port of the oil separator tank.
3. Tighten the plug.

Further information See chapter 10.4.2 for cooling oil filling.

Performing final work steps

➢ Close the canopy.



Dispose of used oil and oil-contaminated working materials according to environmental protection regulations.

10.4.4 Replacing the compressor oil filter

Material
Spare parts
Tool
Receptacle
Cleaning cloths

Precondition
The machine is shut down,
the machine is fully vented, the pressure gauge reads 0 psig,
the machine is cooled down,
all compressed air consumers are disconnected and the air outlet valves are open,
the negative cable to the battery is disconnected.

⚠ CAUTION

Danger of burning from hot components and oil.

➢ *Wear long-sleeved clothing and protective gloves.*

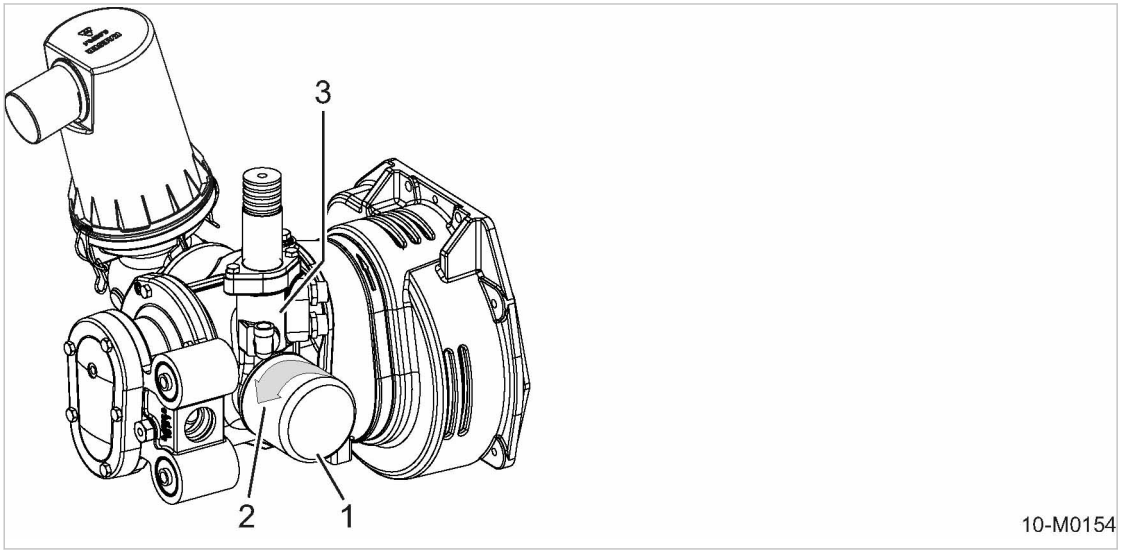

Fig. 49 Changing the oil filter

1 Oil filter
2 Direction of rotation to unscrew oil filter
3 Combination valve (integrated in airend)

Changing the oil filter

1. Open the canopy.
2. Prepare a receptacle.
3. Loosen oil filter (turn in direction of arrow 2).
4. Remove the oil filter.
5. Catch any escaping oil.
6. Carefully clean sealing surfaces (flange) using lint-free cloth.
7. Lightly oil the new filter's gasket.
8. Set oil filter into installation position.

9. Turn the new oil filter clockwise by hand until the oil filter fits tightly on the sealing surface (flange).
10. Check the oil level in the oil separator tank.



Cooling oil level too low.

➢ Top off the cooling oil.

11. Reconnect the negative battery terminal.
12. Close the canopy.



Dispose of old cooling oil and any materials or parts contaminated with oil according to environment protection regulations.

Starting the machine and performing a test run

1. Start the machine and run in IDLE until the operating temperature is reached.
2. Close the outlet valves.
3. Shut down the machine.
4. Wait until the machine has automatically vented.
   Pressure gauge reads 0 psig!
5. Open the outlet valves.
6. Open the canopy.
7. Check the oil level after about 5 minutes.



Cooling oil level too low.

➢ Top off the cooling oil again.

8. Visually inspect for leaks.
9. Close the canopy.

10.4.5 Oil separator tank dirt trap maintenance

Material
Cleaning cloth
Wrench
Small screwdriver
Maintenance kit, control valve
Petroleum ether or spirit

Precondition
The machine is shut down.
The machine is fully vented, the pressure gauge reads 0 psig.
The machine is cooled down.
All compressed air consumers are disconnected and the air outlet valves are open.
Negative cable to the batteries disconnected.

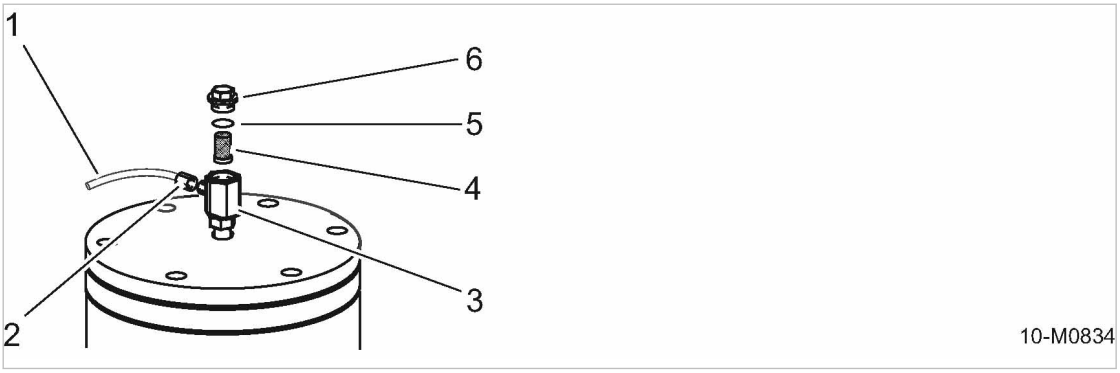

Fig. 50 Oil separator tank dirt trap maintenance

[1] Oil return line
[2] Union nut
[3] Dirt trap housing
[4] Strainer
[5] O-ring
[6] Screw fitting

➢ Open the canopy.

Dirt trap maintenance:

1. Undo the union nut [2] and bend the oil return line [1] to one side.
2. Unscrew the dirt trap [3].
3. Remove and clean the strainer [4] and O-ring [5].
4. Check the strainer and O-ring for function and wear.
   Replace components if they are heavily worn.
5. Clean the housing and fitting [6] of the dirt trap.
6. Re-insert the strainer and O-ring in the housing and close with the fitting.
7. Refit the oil return line and tighten the union nut.

Making operational:

1. Reconnect the negative battery terminal.
2. Close the canopy.

Dispose of old parts and contaminated materials according to environmental regulations.

Starting the machine and performing a test run:

1. Switch the machine on and run it in IDLE mode for approximately 5 minutes.
2. Shut down the machine.
3. Wait until the machine has automatically vented.
   Pressure gauge reads 0 psig!
4. Open the outlet valves.
5. Open the canopy.
6. Carry out a visual check for leaks.
7. Shut down the machine.
8. Close the canopy.

10.4.6 Changing the oil separator cartridge

The oil separator cartridge cannot be cleaned.

The life of the oil separator cartridge is influenced by:

- contamination in the air drawn into the compressor,
- and adhering to the changing intervals for:
  - Cooling oil
  - Oil filter
  - Air filter

Material
Spares
Cleaning cloth
Wrench

Precondition
The machine is shut down.
The machine is fully vented, the pressure gauge reads 0 psig.
Machine is cooled down.
All compressed air consumers are disconnected and the air outlet valves are open.
The negative cable to the battery is disconnected.

➢ Open the canopy.

10.4.6.1 Changing the oil separator cartridge

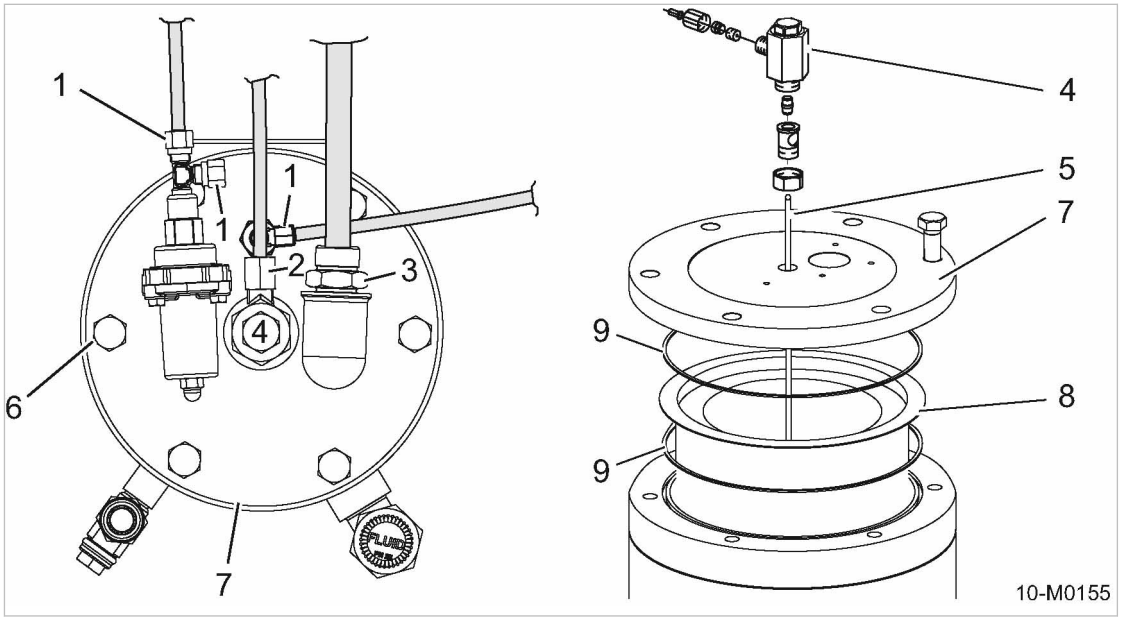

Fig. 51 Changing the oil separator cartridge

1. Control air line union nut
2. Oil scavenge pipe union nut
3. Compressed air hose union nut
4. Dirt trap
5. Oil scavenge pipe (screwed to the cover)
6. Fixing screw
7. Cover
8. Oil separator cartridge
9. Gasket or O-ring

Changing the oil separator cartridge

1. Undo the union nuts [1],[2] and [3].
2. Remove the control line, oil scavenge line and compressed air hose.
3. Unscrew the dirt trap [4].
4. Carefully draw out the dirt trap with the oil scavenge pipe [5] and lay them to one side.
5. Remove the fixing screws [6] and carefully lift the cover [7] and lay it to one side.
6. Take out the old cartridge [8] and gaskets [9].
7. Clean all sealing surfaces, taking care that no foreign bodies (dirt particles) fall into the oil separator tank.
8. Insert the new oil separator cartridge with gaskets and screw down the cover.
9. Replace and tighten all fittings.
10. Check the oil level in the oil separator tank.
    Cooling oil level too low: Replenish the cooling oil.

Maintenance of the dirt trap must be carried out whenever the oil separator cartridge is changed.

Further information — Information on dirt trap maintenance is given in chapter 10.4.5.

Making operational

1. Reconnect the negative battery terminal.
2. Close the canopy.

Dispose of old parts and contaminated materials according to environmental regulations.

Starting the machine and performing a test run

1. Start the machine and run in IDLE until the operating temperature is reached.
2. Close the outlet valves.
3. Shut down the machine.
4. Wait until the machine has automatically vented.
   Pressure gauge reads 0 psig!
5. Open the outlet valves.
6. Open the canopy.
7. Check the oil level after about 5 minutes.
   Top off if necessary.
8. Carry out a visual check for leaks.
9. Close the canopy.

10.4.6.2 Option ba
Changing the oil separator (machine with low-temperature equipment)

Changing the oil separator cartridge with the frost protector option is carried out as described above.
In addition, the frost protector must be emptied and its fittings undone.
Be careful of the frost protector control lines when removing the separator tank cover.

1. Empty the lower part of the frost protector. See chapter 10.10.5 on frost protector maintenance.
2. Remove the screws fixing the frost protector to the cover.
3. Lift the cover carefully and remove the frost protector control lines if necessary.

Making operational

1. Reconnect the negative cable to the batteries.
2. Close the canopy.



Dispose of old parts and contaminated materials according to environmental regulations.

Starting the machine and performing a test run

1. Start the machine and run in IDLE until the operating temperature is reached.
2. Close the outlet valves.
3. Shut down the machine.
4. Wait until the machine has automatically vented.
   Pressure gauge reads 0 psig!
5. Open the outlet valves.
6. Open the canopy.
7. Check the oil level after about 5 minutes.
   Top off if necessary.
8. Carry out a visual check for leaks.
9. Close the canopy.

10.4.7 Compressor air filter maintenance

Compressor air filter maintenance

- The filter element must replaced at the latest when the corresponding maintenance indicator responds.
- As stipulated in the maintenance table, replace the filter element after two years.



- Using the machine without an air filter element is not permitted!
- Do not use filter elements with damaged surface or seals.
- The use of an unsuitable air filter can permit dirt to ingress into the pressure system and cause premature wear and damage to the machine.

Material: Spares
Cleaning cloth

Precondition: The machine is shut down.
The machine is fully vented, the pressure gauge reads 0 psig.
The machine is cooled down.
All compressed air consumers are disconnected and the air outlet valves are open.

NOTICE

Dirty air filter element
Loss of machine performance

➢ *Replace the filter element.*

➢ Open the cover.

Checking contamination of the air filter

Air filter maintenance is necessary when the yellow piston inside the maintenance indicator reaches the red zone.

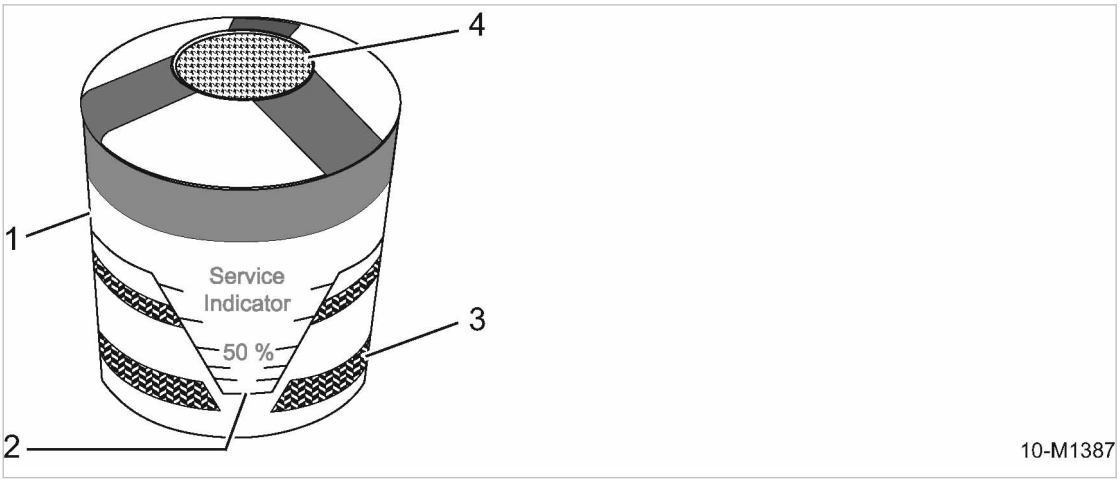

Fig. 52 Maintenance indicator

[1] Maintenance indicator
[2] Indicator piston
[3] Red zone indicator scale
[4] Reset knob for the maintenance indicator

➢ Check the air filter maintenance indicator.
If the yellow piston reaches the red zone, renew the filter element.

Replacing the filter element

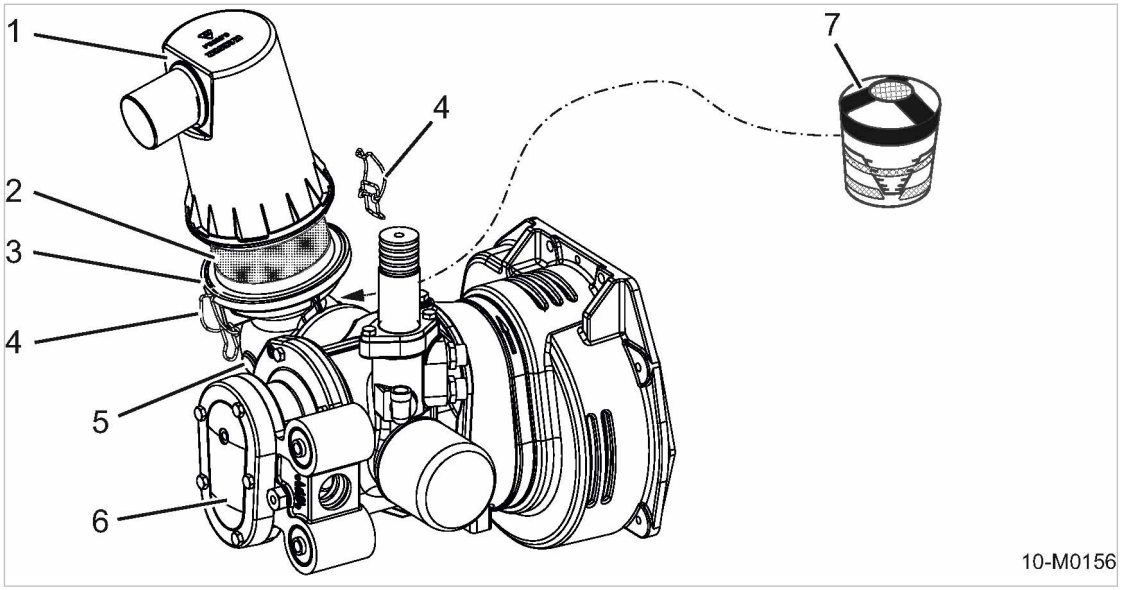

Fig. 53 Compressor air filter maintenance

[1]	Filter cap	[5]	Inlet valve
[2]	Filter element	[6]	Airend
[3]	Filter housing	[7]	Maintenance indicator
[4]	Retaining clip		

1. Release the retaining clip.
2. Remove the cover.
3. Draw out the filter element.
4. Carefully clean the inside of the housing, the cover and sealing faces with a damp cloth.
5. Insert a new filter element in the housing. Make sure it is properly in place and sealed by its gaskets.
6. Replace the cap with the two retaining clips.
7. Check the correct attachment of the filter cover.

Resetting the maintenance indicator:

➢ Press the reset knob on the maintenance indicator a number of times.

The yellow piston within the indicator is reset and the maintenance indicator is ready for use again.

➢ Close the cover.

Dispose of old parts and contaminated materials according to environmental regulations.

10.4.8 Checking safety relief valves

➢ Have safety relief valves checked by an authorized KAESER service representative in accordance with the maintenance schedule.

10.5 Cooler maintenance

The respective engine and compressor coolers are arranged together in a radiator block.

Heavy contamination of both coolers will result in cooler overheating, and therefore overheating of the machine. The frequency of cleaning is mainly dependent on local operating conditions.

Check both coolers regularly for clogging. Severe contamination should be cleaned by KAESER SERVICE.

Material
Compressed air
Breathing mask (if necessary)
Water or steam jet blaster

Precondition
The machine is switched off.

The machine has been set down in cleaning area with oil separator,
The machine has been set down on level ground,
the machine has cooled down.

Air consumers are disconnected,
the outlet valves are open,
the machine is fully vented, the pressure gauge reads 0 psig.

Canopy is open,
negative cable to battery has been disconnected.

⚠ CAUTION

Swirling dust due to cleaning with compressed air!
Illness of the respiratory tract.

➢ *Wear breathing mask.*

NOTICE

Damage to the machine can be caused by water or steam jets!
Direct water or steam jets can damage or destroy electrical components and display instruments.

➢ *Cover up electrical components such as the control cabinet, generator, starter and display instruments.*

➢ *Do **not** direct water or steam jets at sensitive components such as the display instruments.*

➢ *Deploy the extension pole of the pressure washer at a distance of at least 20 inches and at an approximate 90° angle to the cooler/radiator surface.*

NOTICE

Improper cleaning with hard objects!
Damage to oil cooler/coolant cooler.

➢ *Do not use hard objects to clean the oil cooler/coolant cooler.*

➢ Follow all instructions.

10.5.1 Cleaning the oil cooler and coolant cooler

The cleaning direction by means of compressed air, water or steam jet must always be in the opposite direction of the cooling air flow.

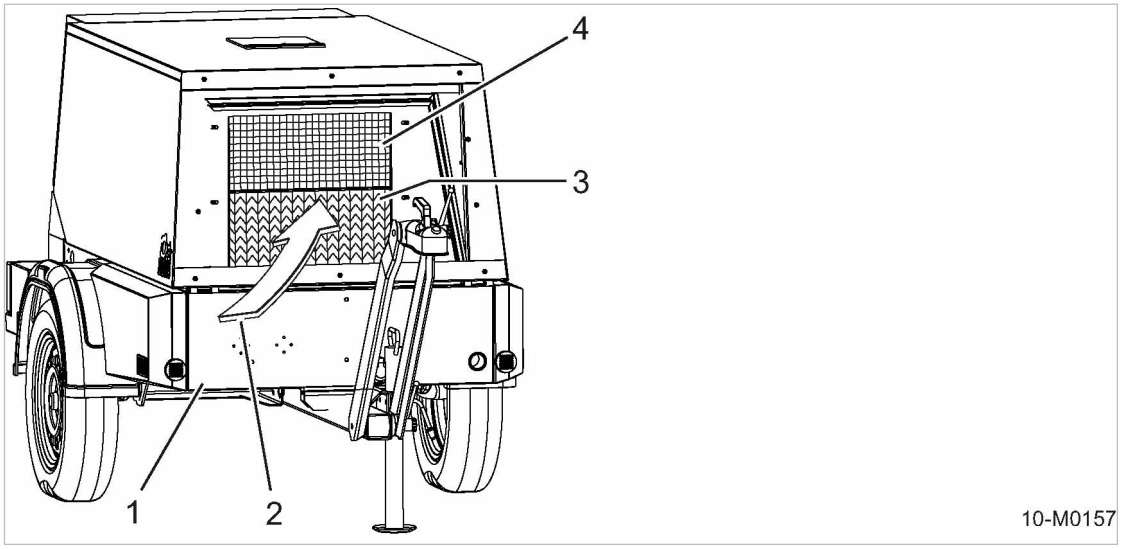

Fig. 54 Cleaning the cooler

[1] Front end of machine, radiator grill removed
[2] Direction of impacting water or steam jet (from outside to inside)
[3] Coolant cooler (engine)
[4] Oil cooler (compressor)

Cover the intake openings of both air filters

1. Cover the intake openings of both the engine and compressor air filters.
2. Close the canopy.

Removing the exhaust air grating

1. Loosen all screws of the exhaust air grill.
2. Remove all screws.
3. Remove the exhaust air grill with integrated noise damping inserts.

Cleaning the oil cooler and coolant cooler

➢ Clean the cooler fins with compressed air, water or steam jet in the opposite direction to the cooling air flow (from inside to outside).

Installing the exhaust air grill

1. Position the exhaust air grating with integrated noise damping inserts.
2. Position all screws.
3. Tighten screws.

Remove the protective coverings from the two air filters

1. Open the enclosure.
2. Remove the covers from the intake openings of both the engine and compressor air filters.

Putting in operation

1. Connect the negative battery terminal.
2. Turn the «Controller On» switch to the “I” position.
3. Close the canopy.

Putting the machine into operation

1. Start the machine.
2. Let the machine warm up in IDLE mode to allow residual water to evaporate.
   Warm-up has been successful when required airend discharge temperature (ADT) has been reached.
3. Turn the «starter switch» to the “0” position.
   The machine is shut down.
4. Wait until the machine has automatically vented.
   Pressure gauge reads 0 psig!
5. Open the discharge valves.

Inspecting both cooler for leaks

1. Open the canopy.
2. Turn the «Controller On» switch to the “0” position.
3. Visually inspect for leaks: Is cooling oil/coolant leaking out?

Is the oil cooler/coolant cooler leaking?

➢ Have the defective oil cooler/coolant cooler repaired or replaced immediately by KAESER SERVICE.

➢ Close the canopy.

10.6 Checking the screw connections

Overview:

- Guideline values for tightening torques.
  - General guideline values for tightening torques.
  - Specific guideline values for tightening torques.
- Sealed screw connections.

➢ Follow all instructions carefully.

10.6.1 General guideline values for tightening torques

Guideline values for the required tightening torques are dependent upon the size of the screw connection, the strength class of the screw material and the friction coefficient.

NOTICE

Damage to the machine from insufficient clamping force at screw connections

➢ *Tighten all screw connections with the defined tightening torque.*

1. Determine the thread size for the screw connection.
2. For determining the defined torque, see chapter 2.4.2.
3. Tighten all screw connections with the defined torque.

10.6.2 Specific guideline values for tightening torques

Screw connections for components that are either safety-related or under particular stress must be tightened with specific tightening torques.

Examples:

- For details of specific tightening torques, see chapter 2.4.2.
  - E.g. Screw connections on lifting eyes.
  - E.g. Cover screws on the oil separator tank.
- Values for further specific tightening torques are provided in the section covering the relevant maintenance task.

NOTICE

Damage to the machine from insufficient clamping force at screw connections

➢ *Screw connections for components that are either safety-related or under particular stress must be tightened exclusively with the correct specific tightening torque.*

1. Determine the correct specific tightening torque.
2. Tighten the screw connections with the specific tightening torque.

10.6.3 Sealed screw connections

Screw connections which must not be adjusted are sealed with a colored locking varnish.

NOTICE

Damage to the machine caused by adjusting the settings

➢ *Leave sealed screw connections in their original condition.*

➢ Do not loosen or adjust sealed screw connections.

Failure to comply with these instructions will invalidate all warranty claims.

10.7 Check sound insulation material

Sound insulation material reduces machine noise emissions to a minimum.

Check your machine’s sound insulation material according to the maintenance schedule.

Dismantle the cooling air inlet and outlet grilles to properly inspect the sound insulation material.

Have damaged sound insulation material replaced immediately.

Sound insulation material is installed, for example, in the following positions within the machine:

- Cooling air inlet and outlet
- Enclosure, gull-wing doors and swing doors
- Bulkheads

1. Dismantle cooling air inlet and outlet grilles.
2. Check the sound insulation material in the cooling air inlet and outlet.
3. Check all sound insulation material inside the machine.
4. Check sound insulation material for condition, attachment and dirt.

The sound insulation material is porous, cracked, no longer exists or is severely contaminated with oil, fuel or cleaning agent.

➢ Have an authorized KAESER service representative replace sound insulation material that can no longer be used.

10.8 Checking the enclosure

The machine's closed enclosure fulfills the following functions during the machine's operation: Protection against contact, cooling air flow, sound proofing, and weather protection.

In order to ensure these functions at any time, the enclosure and its connecting elements must always be in a perfect condition.

Overview:

- Service the rubber seals
- Check closed enclosure
- Check connecting elements

Precondition The machine is switched off.

The machine is installed on level ground,
the machine has cooled down.

All compressed air consumers are disconnected,
the discharge valves are open,
the machine is fully vented, the pressure gauge reads 0 psig!

➢ Follow all instructions.

10.8.1 Maintain rubber sealing strips.

Material Cleaning cloth

Silicone or Vaseline

The rubber sealing strips inside the enclosure seal against rain water and additionally reduce noise emissions. Care of the rubber sealing strips is especially necessary in winter to prevent the strips from sticking and tearing when the enclosure is opened.

1. Open the enclosure.
2. Carefully clean all rubber sealing strips using a lint-free cloth.
3. Check the rubber sealing strips for cracks, holes and other damage.
4. Grease all rubber sealing strips.

Rubber sealing strips are damaged.

➢ Have an authorized KAESER service technician replace the damaged rubber sealing strips.

10.8.2 Checking function of closed enclosure

1. Close the enclosure.
2. Lock all snap fasteners.

The enclosure does not properly rest on the body or cannot be locked.

➢ Contact an authorized KAESER service representative.

10.8.3 Checking connecting elements of enclosure

Material Acid-free oil

The connecting elements of the enclosure may include:

- Screw connections
- Hinges
- Grip
- Snap fasteners
- Gas struts

1. Check all connecting elements of the enclosure for damages, wear and firm seating.
2. If necessary, grease the hinges.

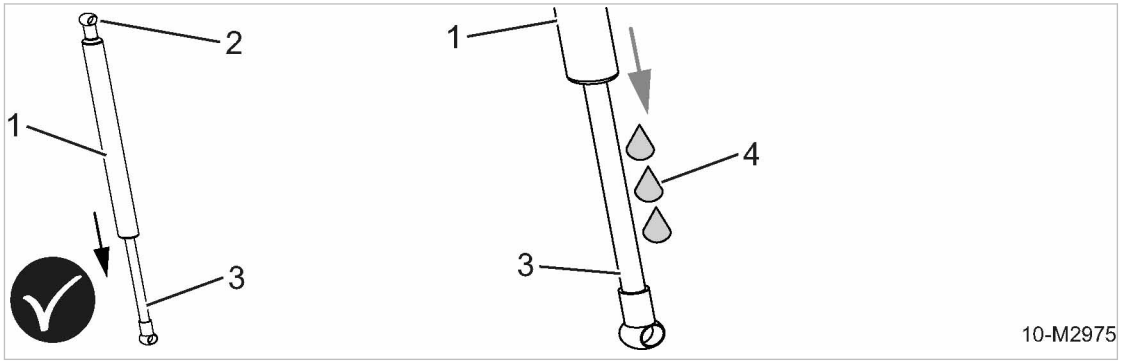

Fig. 55 Connecting rod alignment

[1] Gas strut - cylinder
[2] Ball cup
[3] Connecting rod
[4] Lubrication

3. Check both gas struts.

In order to ensure lubrication of the connecting rod, the connecting rod must be always aligned towards the ground.

4. Check if both gas struts open the unlocked enclosure independently.
   Enclosure opens independently until the technically possible opening angle.
5. Check if the already opened enclosure stays open.

Enclosure does not open properly or does not stay open.

➢ Replace both gas struts.

10.9 Check/replace hose lines

Overview of hose lines of machine:

- Fuel lines of the drive engine
- Pressure hoses of the drive engine
- Pressure hoses of the compressor

The hose line are subject to natural aging regardless of proper storage or permitted utilization during machine operation. This aging changes the material and compound properties and reduces the performance capability of the hose lines. As a result the period of use for hose lines is limited.

The operator must ensure that all hose lines are checked at reasonable intervals and are replaced if required, see maintenance schedule 10.2.3.1

➢ Comply with all instructions!

10.9.1 Replace the fuel lines of the drive engine

➢ Have an authorized KAESER service representative replace the fuel lines of the drive engine.

10.9.2 Replace the pressure hoses of the engine

Overview of all pressure hoses at engine:

- Engine oil
- Coolant for the water cooler
- Charge air (if available)

➢ Have an authorized KAESER service representative replace the pressure hoses of the engine.

10.9.3 Replace the pressure hoses of the compressor

Overview of all pressure hoses on the compressor:

- Cooling oil
- Compressed air
- Control air
- Condensate

➢ Have an authorized KAESER service representative replace the pressure hoses of the compressor.

10.10 Maintenance for Optional Items

➢ Perform maintenance tasks according to the schedule in chapter 10.2.3.2.

10.10.1 Option ea
Tool lubricator maintenance

Material: Tool oil (special lubricant for road breakers)
Funnel
Cleaning cloth

Precondition: The machine is shut down,
the machine is standing level,
the machine is fully vented, the pressure gauge reads 0 psig,
the machine is cooled down.
All compressed air consumers are disconnected and the air outlet valves are open.

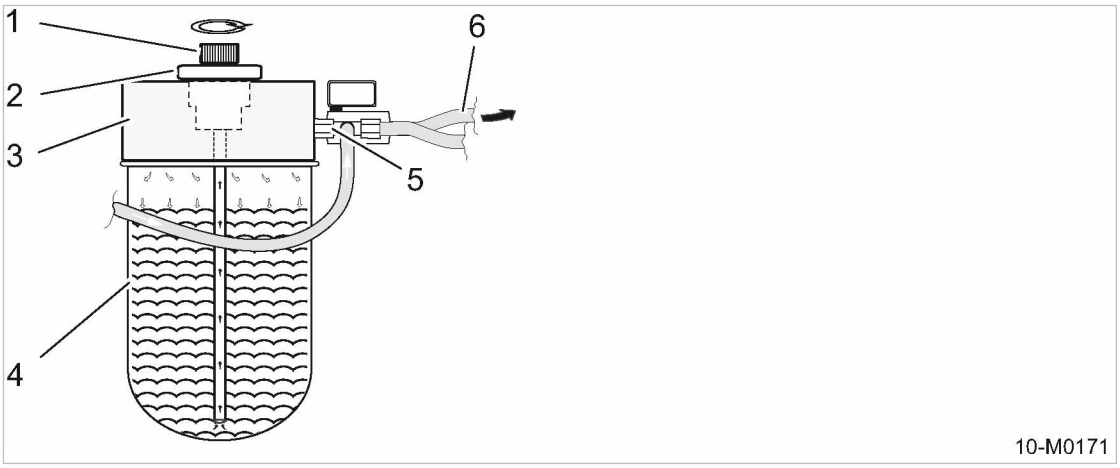

Fig. 56 Tool lubricator maintenance

1. Metering knob
2. Filler plug with dipstick and integrated riser tube
3. Tool lubricator upper part with oil filling port
4. Oil tank
5. Compressed air inlet
6. Tool oil outlet

➢ Open the canopy.

Checking the tool lubricator oil level

Check the oil level daily.
A dip stick is attached to the underside of the oil filler plug with which to measure the oil level.
The oil level should be in the upper third of the dipstick.

1. Slowly unscrew and withdraw the oil filler plug.
2. Wipe off the dipstick with a lint-free cloth or rag and screw the plug fully in again.
3. Unscrew and withdraw the plug once more and read off the oil level on the dipstick.

?

Below required filling level.
➢ Top off the lubricant.

4. Close the canopy.

Filling and topping off with tool lubricator oil

1. Slowly unscrew and withdraw the oil filler plug.
2. Use a funnel to pour in the oil to the maximum level (0.4 - 0.6 inches below the top of the tank).
3. Check the oil level.
4. Check the filler plug O-ring for external damage.



O-ring is damaged.

➢ Replace the O-ring.

5. Insert the plug to close the oil filler port.
6. Close the canopy.

Further information See chapter 2.9.1 for suitable oil grade and volume.

10.10.2 Option da
Compressed air aftercooler maintenance

The compressed air aftercooler is located near the air treatment devices. The frequency of cleaning is mainly dependent on local operating conditions.

Check the compressed air aftercooler regularly for clogging.

Severe contaminations should be cleaned by an authorized KAESER service representative.

Material Compressed air
Breathing mask (if necessary)
Water or steam jet blaster

Precondition The machine is shut down.

Canopy is open.

The machine has been set down in cleaning area with oil separator,
the machine standing level,
the machine has cooled down.

Air consumers are disconnected,
the outlet valves are open,
the machine is fully vented, the pressure gauge reads 0 psig.

The negative cable to the battery is disconnected.

⚠ CAUTION

Swirling dust due to cleaning with compressed air!
Illness of the respiratory tract.

➢ *Wear breathing mask.*

NOTICE

Damage to the machine can be caused by water or steam jets!
Direct water or steam jets can damage or destroy electrical components and indicating instruments.

- ➢ *Cover up electrical components such as the control cabinet, alternator, starter and display instruments.*
- ➢ *Do **not** direct water or steam jets at sensitive components such as the display instruments.*
- ➢ *Deploy the extension pole of the pressure washer at a distance of at least 20 inches and at an approximate 90° angle to the cooler/radiator surface.*

NOTICE

Improper cleaning with hard objects!
Damages to compressed air aftercooler.

- ➢ *Do not use hard objects to clean the compressed air aftercooler.*

➢ Comply with all instructions!

10.10.2.1 Cleaning the compressed air after-cooler

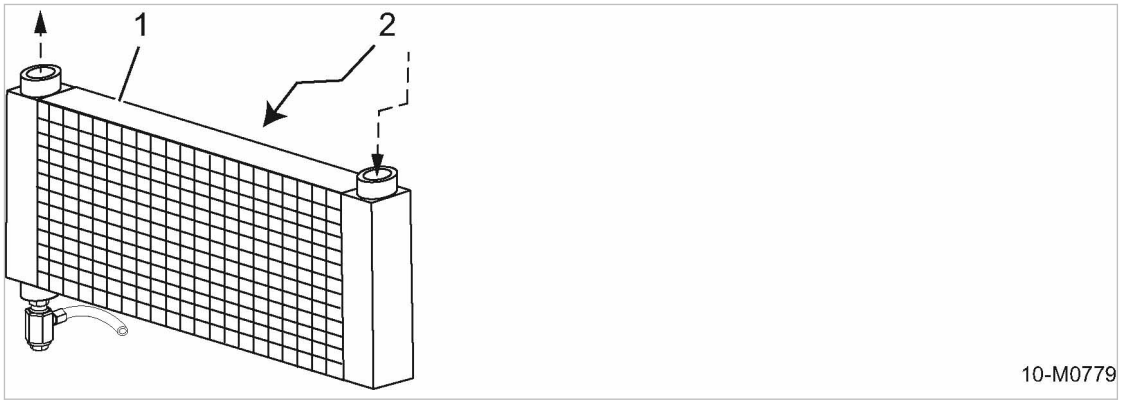

Fig. 57 Cleaning the compressed air after-cooler

[1] Compressed air aftercooler
[2] Cleaning direction for water or steam jet blaster

Cover the intake openings of both air filters:

1. Cover the intake openings of both the engine and compressor air filters.
2. Close the canopy.

Cleaning the compressed air after-cooler:

➢ Clean the cooler blades, with compressed air, water or steam jet in the opposite direction of the cooling air.

Remove the protective coverings from the two air filters:

1. Open the canopy.
2. Remove the covers from the intake openings of both the engine and compressor air filters.

Putting in operation:

1. Reconnect the negative battery terminal.
2. Turn the «Controller On» switch to the “I” position.
3. Close the enclosure.

Putting the machine into operation:

1. Start the machine.
2. Let the machine warm up in IDLE mode to allow residual water to evaporate.
   Warm-up has been successful when required airend discharge temperature (ADT) has been reached.
3. Turn the «starter switch» to the “0” position.
   The machine is shut down.
4. Wait until the machine has automatically vented.
   Pressure gauge reads 0 psig!
5. Open the discharge valves.

Checking compressed air aftercooler for leaks:

1. Open the canopy.
2. Turn «Control On» switch to position "0".
3. Visually inspect for leaks: Does condensate escape?



Is the compressed air aftercooler leaking?

➢ Have the defective compressed air aftercooler repaired or replaced immediately by KAESER.

➢ Close the enclosure.



Clean the compressed air aftercooler only at designated cleaning locations equipped with an oil separator.

10.10.3 Option da
Compressed air water separator maintenance

If the amount of water in the compressed air is too high, the dirt trap of the compressed air water separator requires cleaning. The compressed air water separator [2] is integrated in the compressed air aftercooler [1].

Material
Cleaning cloth
Wrench
Small screwdriver
Dirt trap maintenance kit
Petroleum ether or spirit

Precondition
The machine is shut down.
The machine is cooled down.
The machine is fully vented, the pressure gauge reads 0 psig.
All compressed air consumers are disconnected and the air outlet valves are open.
The negative cable to the battery is disconnected.

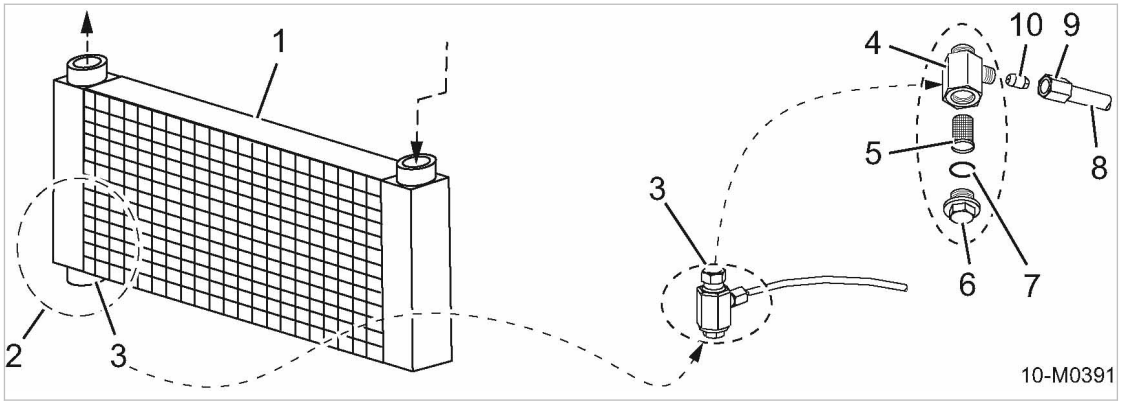

Fig. 58 Cleaning the dirt trap

[1]	Compressed air aftercooler	[6]	O-ring
[2]	Compressed air water separator	[7]	Screw plug
[3]	Dirt trap	[8]	Condensate drain hose
[4]	Dirt trap housing	[9]	Condensate drain hose union nut
[5]	Strainer	[10]	Nozzle

➢ Open the cover.

Cleaning the dirt trap

1. Unscrew the plug [7] and remove the strainer [5].
2. Loosen the union nut [9] and detach the condensate drain hose [8] from the dirt trap
3. Use the small screwdriver to unscrew the nozzle [10] from the dirt trap housing.
4. Clean the nozzle, strainer, screw plug, O-ring [6] and dirt trap housing [4] with cleaning solvent or spirit.
5. Check the nozzle, strainer and O-ring for wear.
   Replace components if they are heavily worn.
6. Place the strainer on the screw plug.
7. Screw in the plug making sure the O-ring seats properly.
8. Screw in the nozzle and reattach the condensate drain hose.

Putting in operation:

1. Reconnect the negative battery terminal.
2. Close the cover.

Starting the machine and performing a test run:

1. Switch the machine on and run it in IDLE mode for approximately 5 minutes.
2. Shut down the machine.
3. Wait until the machine has automatically vented.
   Pressure gauge reads 0 psig!
4. Open the outlet valves.
5. Open the cover.
6. Check the housing of the water separator and the hose line for leaks.
7. Close the cover.

10.10.4 Option dd
Combination filter maintenance

To ensure proper functioning of the filter combination, you must complete the "Drain condensate" maintenance task on a daily basis, see Fig. 59.

Overview:

- Drain condensate
- Changing the filter element

Precondition The machine is shut down,
the machine is standing level,
the machine is fully vented, the pressure gauge reads 0 psig,
all compressed air consumers are disconnected and the air outlet valves are open.

⚠ WARNING

Danger of injury from compressed air!
Filter combination is pressurized during operation. Serious injury can result from loosening or opening components under pressure.

➢ *Wait until the machine has automatically vented (check: pressure gauge reads 0 psig!)*

➢ *Depressurize the combination filter.*

➢ Open the canopy.

10.10.4.1 Drain condensate

Material Receptacle
Cleaning cloths

Option dd

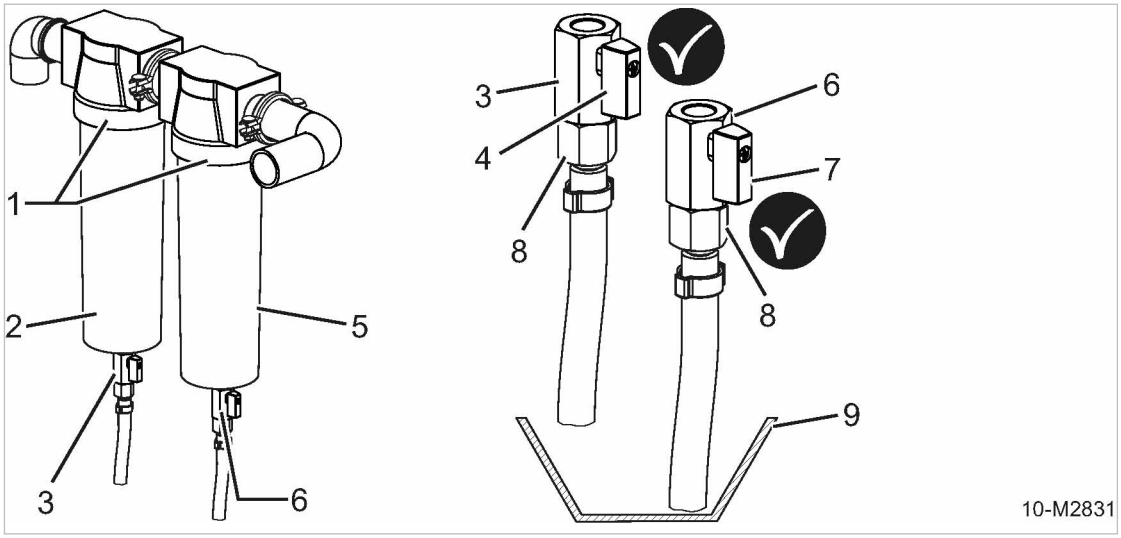

Fig. 59 Combination filter maintenance

1 Filter combination
2 Pre-filter
3 Shut-off valve, pre-filter
4 Lever for shut-off valve, pre-filter
5 Fine filter (micro-filter)
6 Shut-off valve, fine filter
7 Lever for shut-off valve, fine filter
8 Condensate drain hose fitting
9 Receptacle

1. Place the receptacle under the combination filter hose lines.
2. Open the shut-off valve of the pre-filter.
   The lever of the shut-off valve is positioned in flow direction.
3. Open the shut-off valve of the fine filter.
   The lever of the shut-off valve is positioned in flow direction.
4. Close the canopy.
5. Start up the machine and run in IDLE.
   The condensate collecting in the filter housings is blown out.
6. Stop the compressor as soon as air escapes.
7. Open the canopy.
8. Close the shut-off valve.
9. Close the canopy.

Condensate must be stored in suitable containers and disposed of in accordance with local environmental regulations.

10.10.4.2 Changing the filter elements

The pre-filter and micro-filter contain different elements and these must be changed as a pair. Note location!

Using the combination filter without an element installed is not permitted.

Handle new filter elements only with clean fabric gloves. Do not touch the new filter elements with bare fingers – Contamination risk!

Material
Spare parts
Filter wrench
Wrench
Cleaning cloths
Clean fabric gloves

Precondition
The machine is cooled down.
The negative cable to the battery is disconnected.

Ensure that the combination filter is not under pressure

➢ Slowly open the pre-filter and micro-filter condensate drain shut off valves.
Remaining pressure escapes.

Gaining access to the filter housing

➢ Loosen the screw fitting of the condensate drain hoses from the filter housings of pre-filter and micro-filter and remove the drain hoses.

Changing the pre-filter element

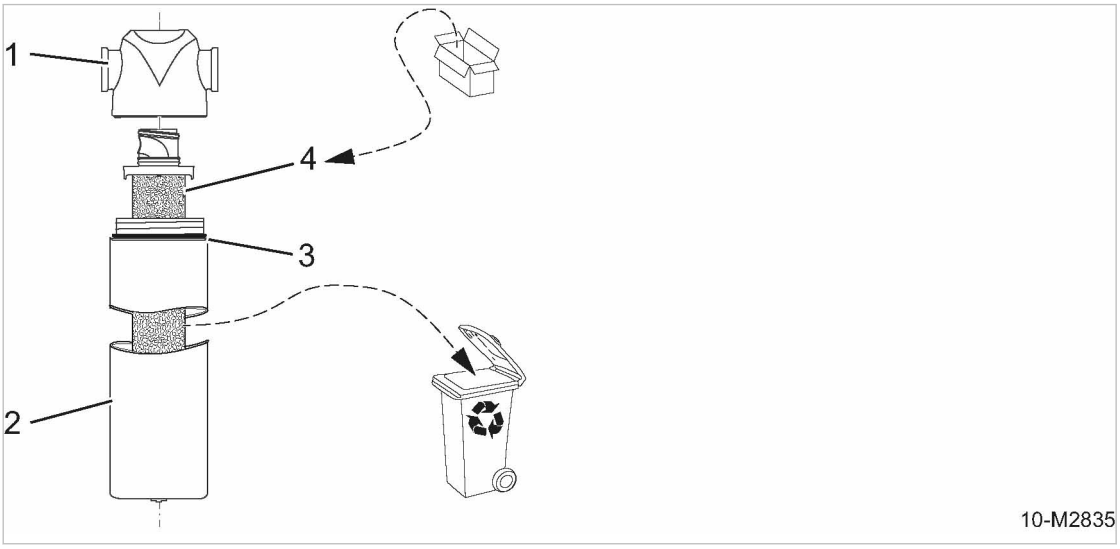

Fig. 60 Changing the prefilter element

[1] Filter head
[2] Filter housing
[3] Gasket
[4] Filter element

1. Unscrew the filter housing counterclockwise.
2. Draw the filter element down and out.
3. Clean the filter head, housing and sealing surface with a lint-free cloth.
4. Check the gasket.
Gasket damaged: replace gasket.

5. Insert a new filter element.

Wear gloves!

6. Screw on the filter housing clockwise.

Changing the pre-filter element

1. Unscrew the filter housing counterclockwise.
2. Draw the filter element down and out.
3. Clean the filter head, housing and sealing surface with a lint-free cloth.
4. Check the gasket.
   Gasket damaged: replace gasket.
5. Insert a new filter element.

Wear gloves!

6. Screw on the filter housing clockwise.

Putting into operation

Option dd

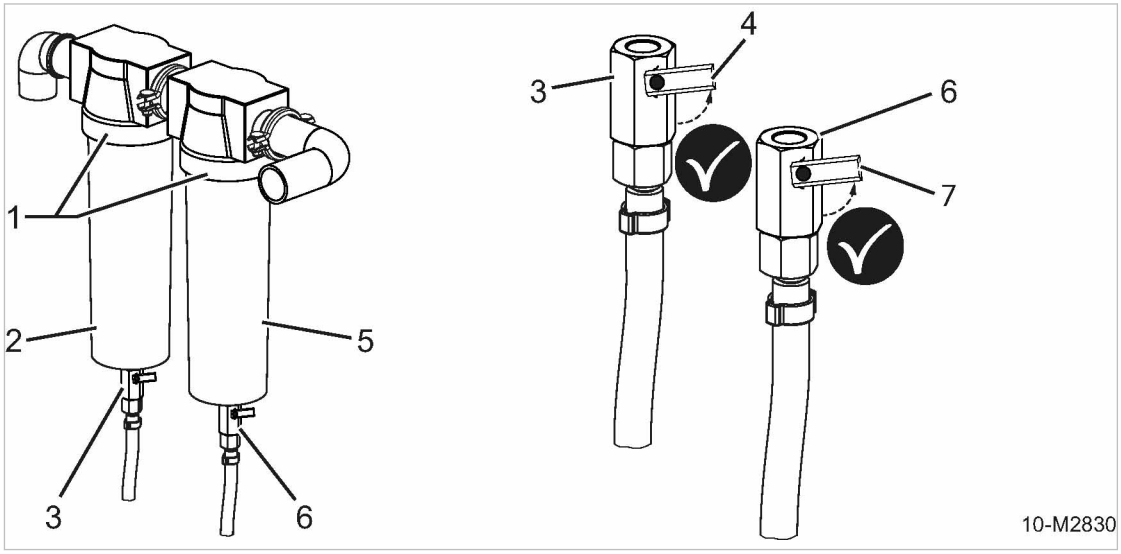

Fig. 61 Filter combination

[1] Filter combination
[2] Pre-filter
[3] Shut-off valve, pre-filter
[4] Lever for shut-off valve, pre-filter
[5] Micro-filter
[6] Shut-off valve, fine filter
[7] Lever for shut-off valve, fine filter

1. Screw the condensate drain hoses to the housings of the pre-filter and the micro-filter.
2. Close the shut-off valve of the pre-filter.
   The lever of the shut-off valve is positioned transversal to the flow direction.
3. Close the shut-off valve of the fine filter.
   The lever of the shut-off valve is positioned transversal to the flow direction.

4. Tighten the filter combination fittings.
5. Turn on the «Battery isolating switch».
6. Close the canopy.



Dispose of old parts and contaminated materials according to environmental regulations.

Further information — Further information on changing elements can be found in the filter instructions in chapter 13.8.

Starting the machine and performing a test run

1. Switch the machine on and run it in IDLE mode for at least 5 minutes.
2. Shut down the machine.
3. Wait until the machine has automatically vented.
   Pressure gauge reads 0 psig!
4. Open the outlet valves.
5. Open the canopy.
6. Check the combination filter housing and hose lines for leaks.
7. Close the canopy.

10.10.5 Option bc Defroster maintenance

Regularly check the tank level when ambient temperatures are below 41 °F, see Maintenance schedule options 10.2.3.2.



The maximum tank level should be at $^{3}/_{4}$ of its capacity.

In order to check the level you must first remove the tank.

Material — New antifreeze
Cleaning cloth

Precondition — The machine is switched off and cooled down.
The machine is standing level.
Air consumers are disconnected,
the outlet valves are open,
the machine is fully vented, the pressure gauge reads 0 psig.
The negative cable to the battery is disconnected.

⚠ DANGER

Danger of fire or explosion caused by the spontaneous ignition of antifreeze!

➢ *Never top off antifreeze unless the machine is switched off and cooled down.*

⚠ WARNING

Compressed air!
The defroster is pressurized during operation.
Serious injury can result from loosening or opening components under pressure.

➢ *Depressurize the defroster.*

Option bc

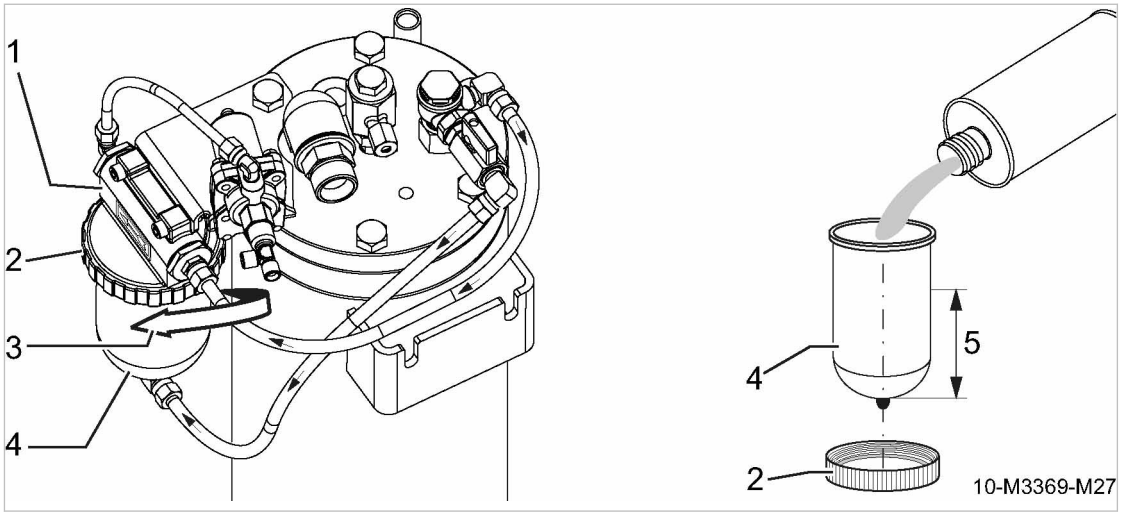

Fig. 62 Top off antifreeze

[1] Top of the defroster
[2] Threaded ring
[3] Direction of arrow
[4] Defroster tank
[5] Maximum level

Removing the tank

1. In order to loosen the threaded ring, slowly turn the threaded ring in the direction of the arrow [3].
2. Completely depressurize in the event of any remaining pressure.
3. Continue to turn the threaded ring in the direction of the arrow until the threaded ring is completely removed from the top.
4. Remove the threaded ring and tank from the top.

Cleaning/checking the sealing surfaces and gasket

1. Clean all sealing surfaces.
2. Check the O-ring in the top for damages.
3. If necessary, replace damaged O-ring.

Checking/topping off level

1. Check filling level.
2. If necessary, top off with new antifreeze, by adhering to the maximum level [5].

Installing the tank

1. Hold tank underneath the top.
2. Install the threaded ring.
3. Tighten the threaded ring by hand force.
4. If necessary, wipe up any spilled antifreeze.

Dispose of antifreeze-soaked working materials according to environmental protection regulations.

10.10.6 Option Ib
Engine air intake shut-off valve maintenance

Material
Compressed air for blowing out
Petroleum ether or spirit
Cleaning cloths

Precondition
The machine is shut down,
the machine is fully vented, the pressure gauge reads 0 psig,
the machine is cooled down,
all compressed air consumers are disconnected and the air outlet valves are open.

NOTICE

Adjusted engine air intake shut-off valve
The engine air intake shut-off valve does not close when flammable gas is drawn into the engine:
The machine does not shut down? Destruction of the engine and explosion and/or fire are possible!

- ➢ *Do not move the valve adjusting screw.*
- ➢ *Have the valve set by a specialized workshop or an authorized KAESER service representative.*

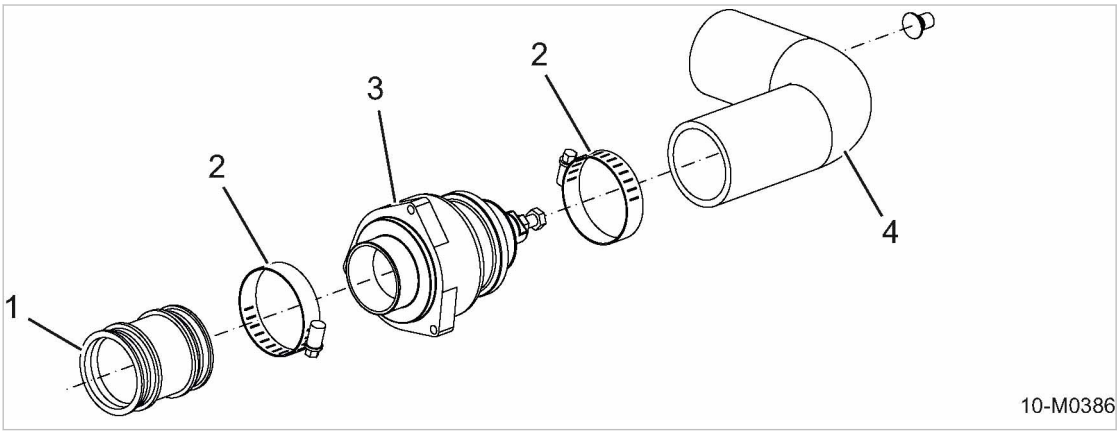

Fig. 63 Engine air intake shut-off valve maintenance

[1] Flexible hose (motor side)
[2] Hose clamp
[3] Engine air intake shut-off valve
[4] Air intake hose (filter side)

➢ Open the canopy.

Engine air intake shut-off valve cleaning

1. **NOTICE** *The engine air intake shut-off valve does not close fully!*
   The machine does not shut down? Destruction of the engine and explosion and/or fire are possible!
   - ➢ *Do not grease the valve, as this may cause a build up of dust and valve sticking.*
2. Loosen the hose clamp on the filter side of the valve.
3. Turn the air intake hose to one side.
4. Loosen the hose clamp on the engine side of the valve.

5. Remove the valve from the flexible hose.
6. Check if the interior of the shut-off valve is clean.
   Blow out any dirt with compressed air.

If necessary, clean the valve with petroleum ether or spirit and allow to dry.

Refer to a specialized workshop or an authorized KAESER service representative if dirt cannot be removed.

Checking the engine air intake shut-off valve for correct function and movement

1. Check the valve for signs of excessive wear.
2. Check that the valve plate closes fully and easily.

Result Have the engine air intake shut-off valve changed if it is heavily worn or malfunctions in any way.

1. Slide the valve onto the flexible hose.
2. Tighten the hose clamp on the motor side.
3. Reposition the air intake hose on the filter side and tighten the hose clamp.
4. Close the canopy.
5. Start the machine and switch to LOAD.
   If the engine stops while switching to LOAD, have the valve adjusted by a specialized workshop or an authorized KAESER service representative.

10.10.7 Option oe
Draining liquid accumulation within the machine

The "closed floor pan" contributes to the protection of the environment by preventing a contamination of the soil in the event of leaking operating fluids.
Liquid accumulations within the machine & body can also cause corrosion or electrical faults.
Liquid accumulations must be removed as quickly as possible in order to avoid potential machine faults.
For draining the liquid, maintenance openings have been added to the floor panel of the machine which are closed with plug.

Option rw; rx:

For machines with a stationary frame structure, we recommend using a vehicle hoist or installation above a vehicle pit due to the restricted ground clearance.

It is forbidden to lift the machine with a crane and leave it hanging on the hoisting gear for inspection or maintenance purposes!

Material Receptacle

Cleaning cloth

Precondition The machine is shut down,

the machine is standing level,

the machine is secured against moving,

the machine is fully vented, the pressure gauge reads 0 psig,

the machine is cooled down.

All compressed air consumers are disconnected and the air outlet valves are open.

1. Place a receptacle underneath the maintenance opening(s).

2. Unscrew and remove the plug(s) from the maintenance openings.
   The liquid will drain.
3. Clean the plug(s) and maintenance openings.
4. Close all maintenance openings with plug(s).
   The machine body is sealed.
5. Using the cleaning cloth, remove any dirt within the machine.



Dispose of collected liquid and contaminated working materials according to environmental protection regulations.

10.10.8 Option ga
Generator drive belt maintenance

Correct belt tension is extremely important for the function of the generator and the operational life of the belt itself.
Use a tensioning mechanism with a spring strut, swing frame and tension pulley to ensure correct belt tensioning. The spring force pushes downward the swing frame with tensioned pulley between the pulley of the crankshaft and the pulley of the generator of the belt drive and thus generates the required belt tension.

Material
Ratchet 1/2 inch
Spare parts (if required)

Precondition
The machine is shut down.
The machine is fully vented, the pressure gauge reads 0 psig.
The machine is cooled down.
All compressed air consumers are disconnected and the air outlet valves are open.

⚠ WARNING

Beware of rotating pulleys and moving belts.
Touching the moving drive belt may result in severe bruising or even loss of limb or extremities.

➢ *Check the belt only when the compressor is shut down.*

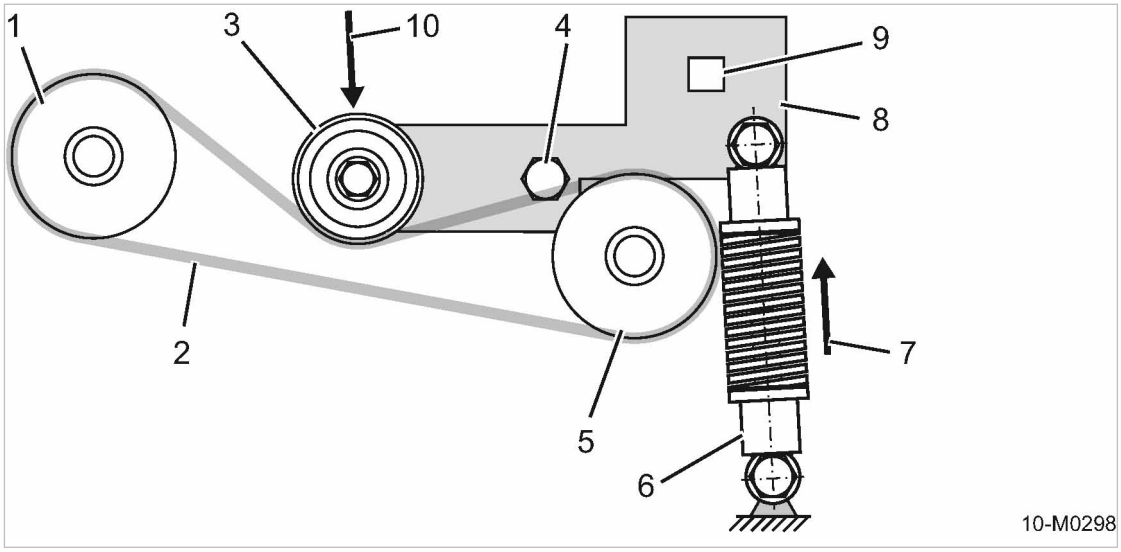

Fig. 64 Replacing the generator belt

1	Pulley, crankshaft	6	Spring strut
2	Drive belt	7	Spring force F1
3	Tension pulley	8	Tensioning frame
4	Deviation point, swing frame	9	Square socket: 1/2 inch
5	Generator drive pulley	10	Leverage F2

➢ Comply with the safety instructions in chapter 3.5.

Visually check for damage

Precondition The negative cable to the battery is disconnected.

1. Manually turn the drive belt 2 at the pulley and inspect the full length of the belt for splits, frays or any sign of stretching.
   In case of damage: Replace the drive belt immediately.
2. Reconnect the negative battery terminal.

Removing the old drive belt

Precondition The negative cable to the battery is disconnected.

1. Insert the ratchet with a 1/2 inch square in the square socket 9 of the swing frame 8.
2. Right hand: Press the ratchet lever downward and hold.
3. Left hand: Push the drive belt downward and pull it off to side from the tension pulley 3.
4. Permit the swing frame to slowly spring back.
5. Remove the old drive belt.

Checking the pulleys

1. Dirty pulley: Clean pulley.
2. Worn pulley: Change the pulley.

Installing a new drive belt

1. Lightly place the new drive belt over the crankshaft pulley 1 and the generator pulley 5.

2. Insert the ratchet with a 1/2 inch square in the square socket of the swing frame.
3. Right hand: Press the ratchet lever downward and hold.
4. Left hand: Push the drive belt downward and guide it sideways beneath the tension pulley.
5. Permit the swing frame to slowly spring back.
   Belt tension is generated by leverage F2 [10] and tension pulley.
6. Reconnect the negative battery terminal.

10.11 Special version maintenance

➢ Carry out maintenance according to the schedule.

10.11.1 Maintenance schedule for special version

➢ Carry out maintenance tasks according to the following schedule:

Assembly: Task	Daily	A50	A250	A500	A1000	A1500	See chapter	Note
Check fuel tank for contamination, clean if necessary.				X				
Clean tank strainer.				X				
Check fuel pipes and have them replaced, if necessary.					X			KS, FW
Arrange for injection pump to be checked.						X		KS, FW
Arrange for injector nozzles to be checked.						X		KS, FW
Maintenance of the fuel prefilter with water separator:								
Empty the separator tank.		X						
Replace the fuel filter cartridge.			X					
Maintenance of the fuel filter with integrated water separator:								
Empty the transparent separator tank.	X							
Replace the fuel filter cartridge.			X					KS, FW
KS ≙ Contact KAESER SERVICE, FW ≙ Contact Specialist Workshop								

Tab. 97 Regular machine maintenance tasks

10.11.2 Maintainance of special fuel system version

Material
Spare parts
Wrench
Collecting vessel
Cleaning cloth

Precondition
The machine is switched off.
Machine placed on a level surface,
machine cooled.
Air consumers are disconnected,
the outlet valves are open,
the machine is fully vented, the pressure gauge reads 0 psig.
Enclosure is open,
negative cable to battery has been disconnected.

⚠ DANGER

Fire hazard from spontaneous ignition of fuel!
Serious injury or death could result from the ignition and combustion of fuel.

- ➢ *Allow no open flames or sparks at the place of use.*
- ➢ *Ensure that the maximum ambient temperature is not exceeded at the place of use.*
- ➢ *Stop the engine.*
- ➢ *Wipe up escaped fuel.*
- ➢ *Keep fuel away from hot machine parts.*
- ➢ *Ensure that the maximum ambient temperature is not exceeded at the place of use.*

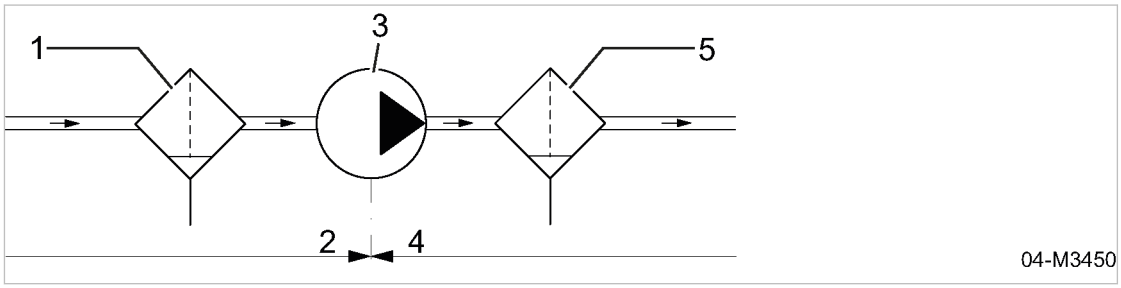

Fig. 65 Fuel filtration

1. Fuel prefilter with integrated water separator
2. Suction side of the fuel feed pump
3. Fuel feed pump
4. Discharge side of the fuel feed pump
5. Fuel filter with integrated water separator

➢ Follow all instructions!

10.11.2.1 Maintenance of the fuel pre-filter with water trap

The fuel prefilter is positioned between the fuel tank and the fuel feed pump.
It protects the fuel feed pump against water deposits and against premature wear.

Tools customary in the trade, such as filter wrench or belts may be used in order to loosen the old fuel filter cartridge for removal. The new fuel filter cartridge, however, may only be installed and tightened by hand force.

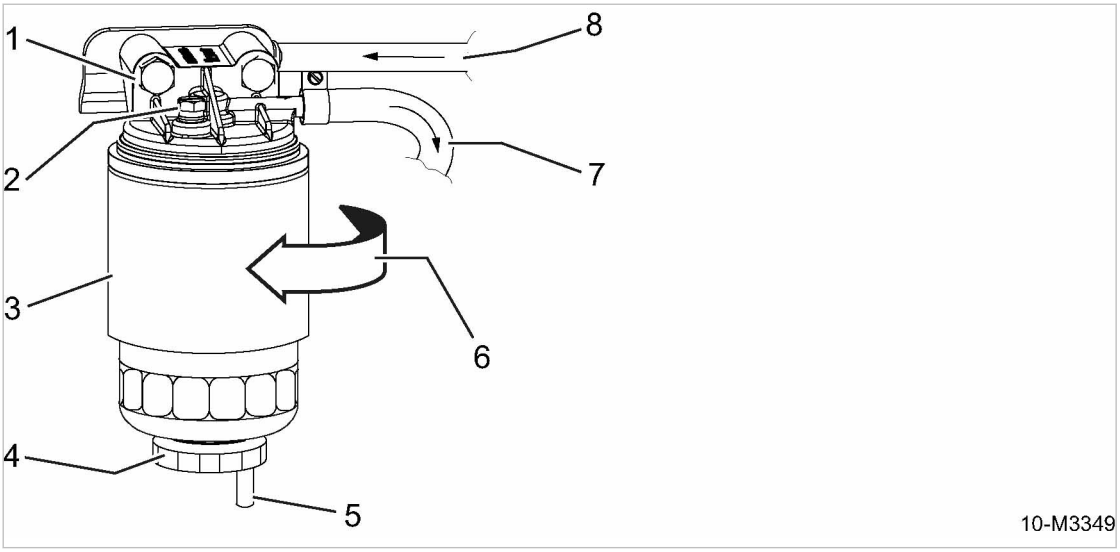

Fig. 66 Fuel prefilter with integrated water separator

[1]	Fuel filter head	[5]	Drain pipe
[2]	Venting screw	[6]	Direction of arrow
[3]	Fuel filter cartridge	[7]	Fuel outlet
[4]	Hand wheel	[8]	Fuel inlet

Emptying the fuel water separator:

The fuel water separator must be emptied at regular intervals, see maintenance schedule for the special version, chapter 10.11.1.

1. Place the collecting vessel under the fuel filter cartridge.
2. Loosen the venting screw [2] on the fuel filter head.
3. Loosen the hand wheel [4] to open the drain pipe.
4. Drain separated water and dirt particles into the collecting vessel.
5. Tighten the hand wheel to close the drain pipe.
6. Tighten the venting screw.

If the venting screw is open, air will continuously flow into the fuel system during the subsequent ventilation process.

7. Connect the negative cable to the battery.
8. Close the enclosure.

Dispose of fuel and any materials contaminated with it in accordance with environmental protection regulations.

Replace fuel filter cartridge:

The fuel filter cartridge is a wear part and must be replaced at regular intervals, see maintenance schedule for special version, chapter 10.11.1.

Precondition Spare part is available.
Old fuel filter cartridge has been emptied.

1. In order to loosen the old fuel filter cartridge, turn the old fuel filter cartridge in the direction of the arrow [6].

2. Remove the old fuel filter cartridge.
3. Clean the fuel filter head and sealing face.
4. Smear diesel fuel on the gasket of the new fuel filter cartridge.
5. Set new fuel filter cartridge into installation position.
6. Turn the new fuel filter cartridge clockwise using only hand force until the gasket fits tightly on the sealing surface.
7. Tighten new fuel filter cartridge by hand force.
8. Check if the venting screw on the fuel filter head is tightened.
9. If necessary, tighten the venting screw.
10. Connect the negative cable to the battery.
11. Close the enclosure.

Dispose of old fuel filter cartridge, fuel and any materials contaminated with it in accordance with environmental protection regulations.

10.11.2.2 Maintenance of the fuel filter with integrated water separator

The fuel filter is positioned at the discharge side of the fuel feed pump.

Tools customary in the trade, such as filter wrench or belts may be used in order to loosen the old fuel filter cartridge for removal. The new fuel filter cartridge, however, may only be installed and tightened by hand force.

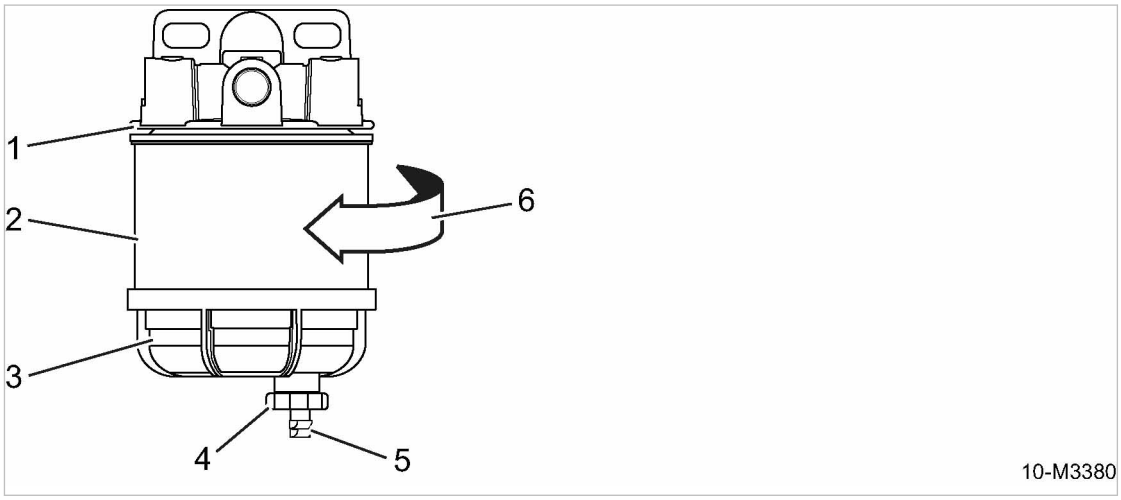

Fig. 67 Fuel filter with integrated water separator

[1]	Fuel filter head	[4]	Hand wheel
[2]	Fuel filter cartridge	[5]	Drain pipe
[3]	Transparent separator tank	[6]	Direction of arrow

Emptying the transparent separator tank:

The transparent separator tank must be emptied at regular intervals, see maintenance schedule for the special version, chapter 10.11.1.

1. Place a collecting vessel underneath the separator tank drain pipe [5].
2. Loosen the hand wheel [4] to open the drain pipe.
3. Drain separated water and dirt particles into the collecting vessel.
4. Tighten the hand wheel to close the drain pipe.

5. Connect the negative cable to the battery.
6. Close the enclosure.

Dispose of fuel and any materials contaminated with it in accordance with environmental protection regulations.

Replacing the fuel filter cartridge:

The fuel filter cartridge is a wear part and must be replaced at regular intervals, see maintenance schedule for special version, chapter 10.11.1. To replace the fuel filter cartridge, first remove the transparent separator tank.

Precondition Spare part is available.

The separator tank has been emptied.

1. In order to loosen the transparent separator tank, turn the transparent separator tank in the direction of the arrow [6].
2. Remove the separator tank.
3. In order to loosen the old fuel filter cartridge, turn the old fuel filter cartridge in the direction of the arrow [6].
4. Remove the old fuel filter cartridge.
5. Clean the fuel filter head, transparent separator tank and all sealing faces.
6. Smear diesel fuel on the gasket of the new fuel filter cartridge.
7. Set new fuel filter cartridge into installation position.
8. Turn the new fuel filter cartridge clockwise using only hand force until the gasket fits tightly on the sealing surface.
9. Tighten new fuel filter cartridge by hand force.
10. Install the transparent separator tank below the fuel filter cartridge.
11. Turn separator tank clockwise.
12. Tighten the separator tank by hand force.
13. Connect the negative cable to the battery.
14. Close the enclosure.

Dispose of old fuel filter cartridge, contaminated fuel and any materials contaminated with fuel in accordance with environmental protection regulations.

10.11.2.3 Venting the fuel circuit

After all maintenance work has been completed, the entire fuel circuit must be vented.

➢ Vent the fuel circuit, see chapter 10.3.3.

10.11.2.4 Starting the machine and performing a trial run

Precondition The negative cable to the battery is connected.

Enclosure is closed.

1. Switch the machine on and run it in IDLE mode for approx. 1 minute.
2. Shut down the machine.
3. Allow the machine to cool down.
4. Open the enclosure.

5. Check the fuel system for leakages.



Fuel system is leaking.

➢ Seal fuel system.

10.12 Documenting maintenance and service work

Machine model/part number:

➢ Enter maintenance and service work carried out in this list.

Date	Maintenance task carried out	Operating hours	Signature

Tab. 98 Maintenance log

11 Spares, Operating Materials, Service

11.1 Note the nameplate

The nameplate contains all information to identify your machine. This information is essential to us in order to provide you with optimal service.

➢ Please give the information from the nameplate with every inquiry and order for spares.

11.2 Ordering consumable parts and operating fluids/materials

KAESER consumable parts and operating materials are original products. They are specifically selected for use in our machines and ensure trouble-free operation.

Unsuitable or poor-quality consumable parts and operating fluids/materials may result in damage to the machine or significantly impair its proper function.

Personal injury may result from damage.

⚠ WARNING

There is risk of personal injury or damage to the machine resulting from the use of unsuitable spares or operating fluids/materials!

➢ *Use only original parts and operating fluids/materials.*

➢ *Do not use alternative consumable parts and operating fluids and materials.*

Compressor

Name	Number/quantity	Number
Air filter element	1	1260
Oil filter	1	1210
Oil separator cartridge set	1	1450
Cooling oil	1	1600

Tab. 99 Compressor spare parts

KUBOTA engine parts

Name	Number/quantity	Number
Air filter element	1	1280
Fuel prefilter	1	1915
Fuel filter	1	1920
Oil filter	1	1905
Oil drain plug sealing ring	1	4496
Injector nozzle	1	4475
Injector sealing ring	1	4476
Belt (V-belt)	1	4470
Engine oil	1	1925

Tab. 100 Engine spare parts

11.3 KAESER AIR SERVICE

KAESER AIR SERVICE offers:

- Authorized service technicians with KAESER factory training.
- Increased operational reliability ensured by preventive maintenance.
- Energy savings achieved by avoidance of pressure losses.
- The security of genuine KAESER spare parts.
- Increased legal certainty as all regulations are kept to.

➢ Why not sign a KAESER AIR SERVICE maintenance agreement.
The advantages:
Lower costs and higher compressed air availability.

11.4 Replacement parts for service and repair

Use these parts lists to plan your material requirement according to operating conditions and to order the required spare parts.

⚠ WARNING

Personal injury or machine damage due to incorrect working on the machine!
Incorrect inspection, service or repair can damage the machine or severely impair its function. Personal injury may result from damage.

➢ *Inspections, preventive maintenance, or repair tasks not described in this Operating Manual must not be carried out by unqualified personnel.*

➢ *Have further tasks, not described in this operating manual, carried out by specialist workshops or an authorized KAESER service representative.*

11.4.1 Spare parts overview

Validity: M27

Service-Kit
(Option)

SEG-3468_01

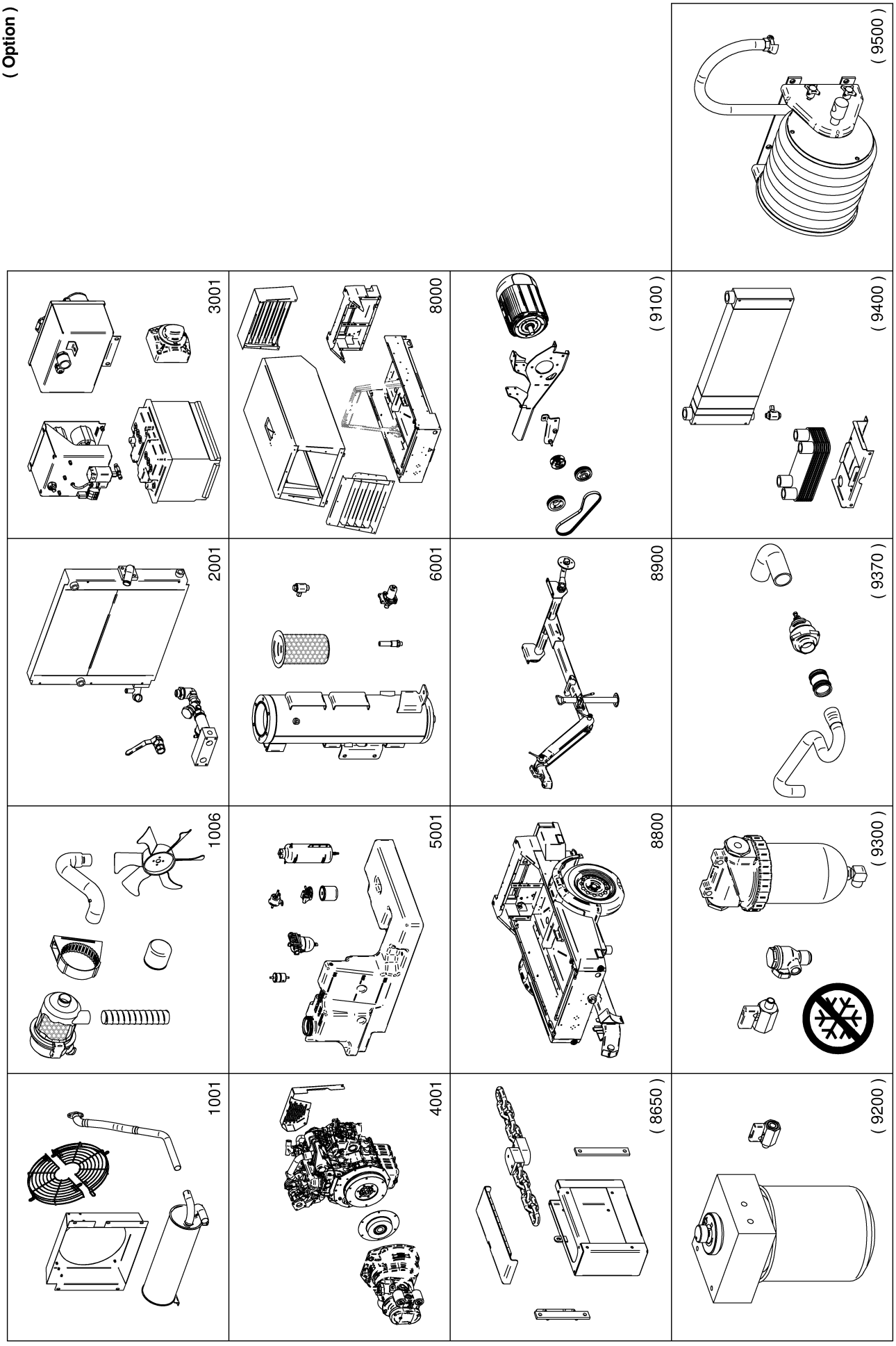

Service-Kit (Option)

SEG-3469_01

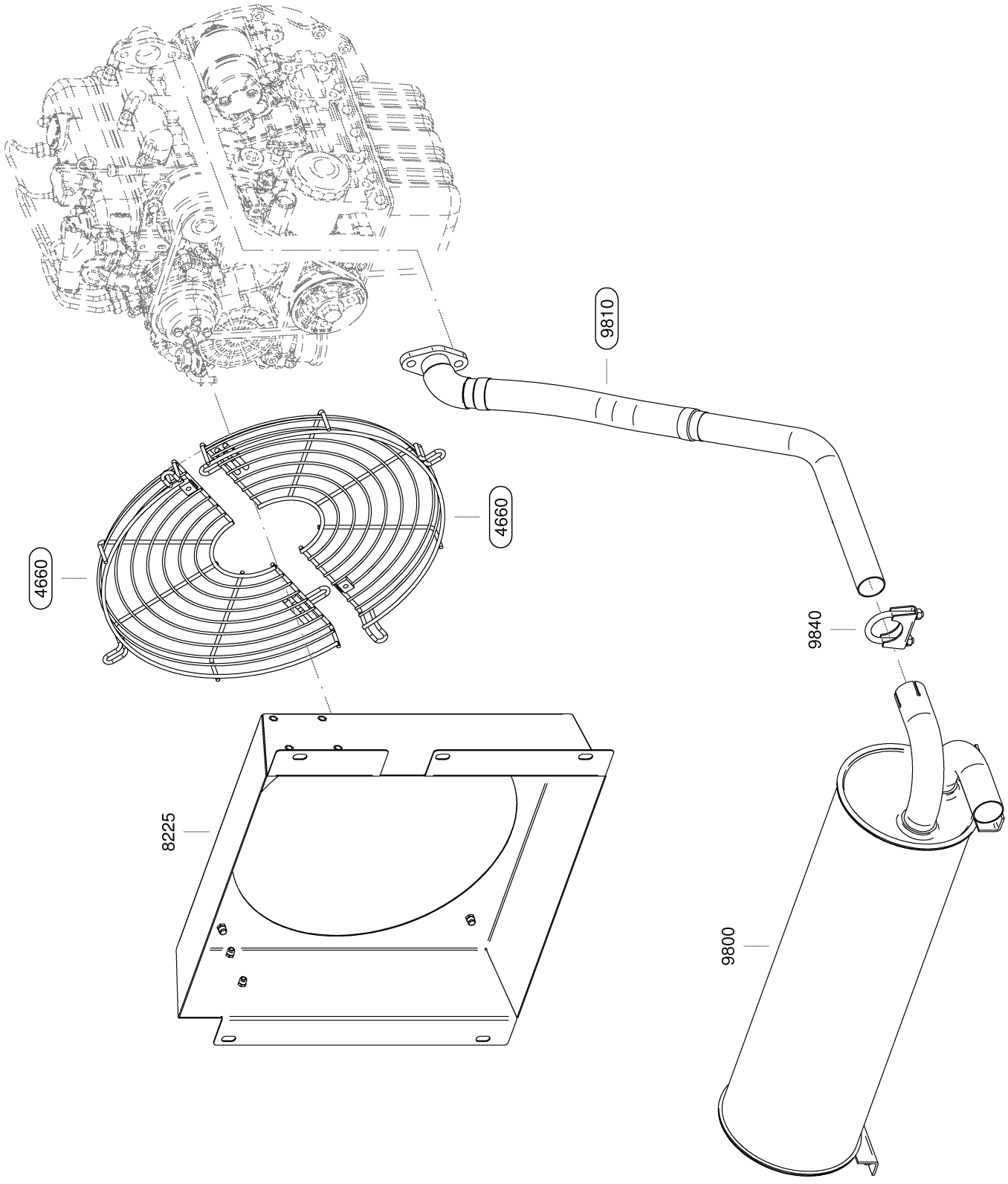

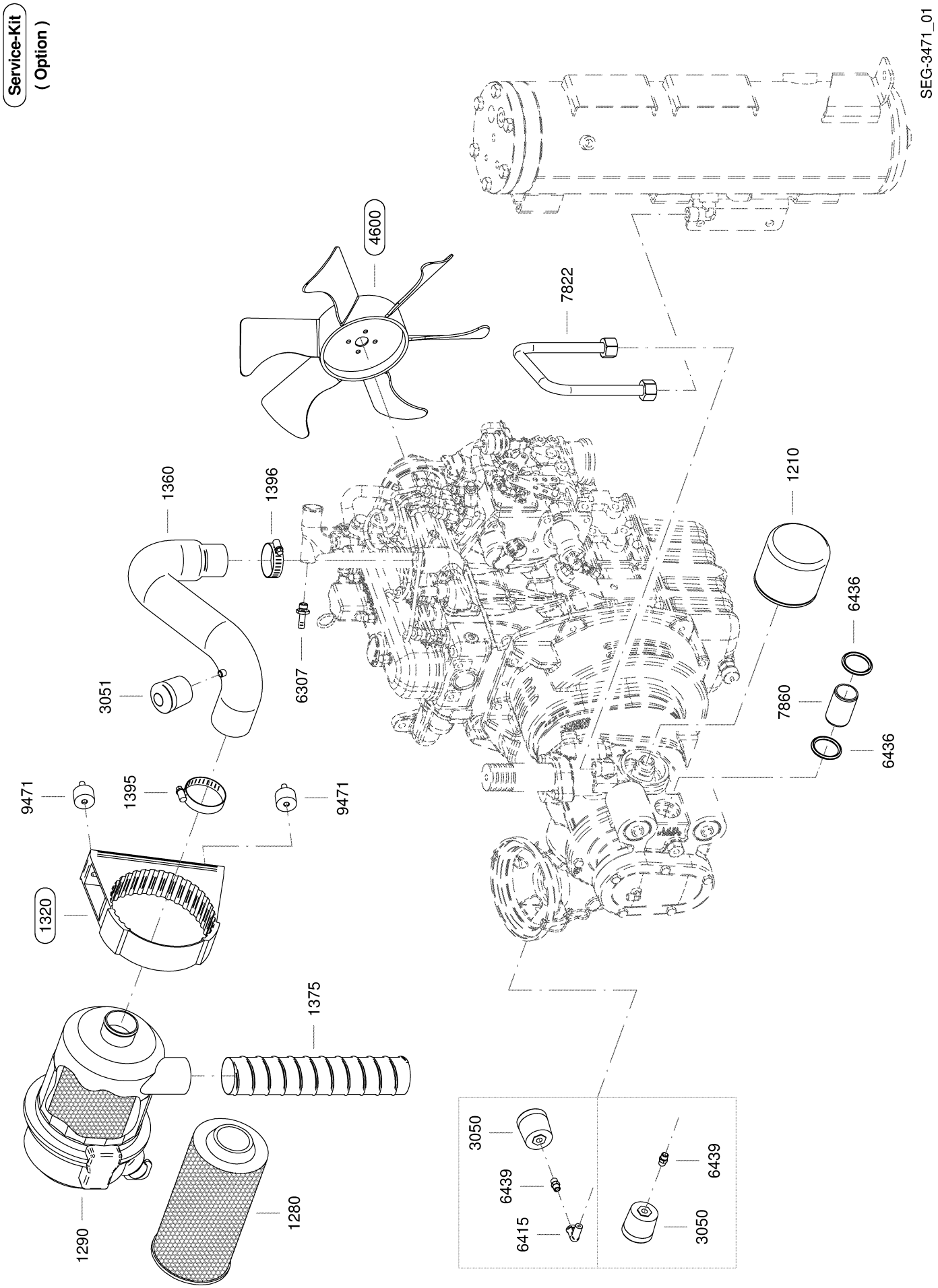
Service-Kit
(Option)
SEG-3471_01
4600
7822
1360
1396
1210
6436
3051
6307
7860
6436
9471
1395
9471
1320
1375
1290
1280
3050
6439
6415
6439
3050

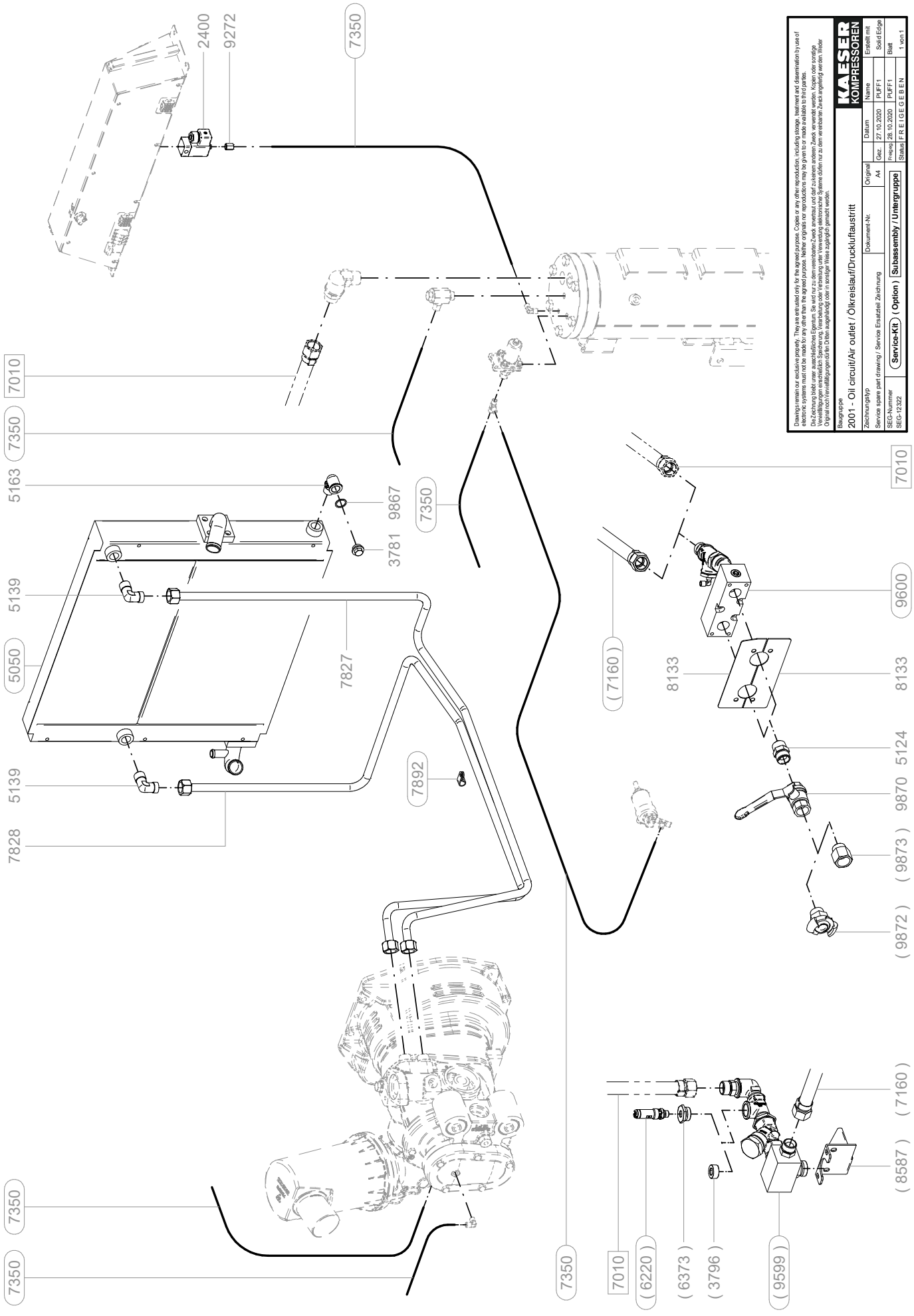
2400
9272
7350
7010
7350
5163
9867
3781
7350
5139
5050
7827
5139
7828
7892
7350
7350
7010
(7160)
8133
9600
8133
5124
9870
(9873)
(9872)
(7160)
(8587)
7350
7010
(6220)
(6373)
(3796)
(9599)
Drawings remain our exclusive property. They are entrusted only for the agreed purpose. Copies or any other reproduction, including storage, treatment and dissemination by use of electronic systems must not be made for any other than the agreed purpose. Neither originals nor reproductions may be given to or made available to third parties.
Die Zeichnung bleibt unser ausschließliches Eigentum. Sie wird nur zu dem vereinbarten Zweck anvertraut und darf zu keinem anderen Zweck verwendet werden. Kopien oder sonstige Vervielfältigungen einschließlich Speicherung, Verarbeitung oder Verbreitung unter Verwendung elektronischer Systeme dürfen nur zu dem vereinbarten Zweck angefertigt werden. Wieder Original noch Vervielfältigungen dürfen Dritten ausgehändigt oder in sonstiger Weise zugänglich gemacht werden.
KAESER KOMPRESSOREN
Baugruppe
2001 - Oil circuit/Air outlet / Ölkreislauf/Druckluftaustritt
Zeichnungstyp
Service spare part drawing / Service Ersatzteil Zeichnung
Dokument-Nr.
Original
A4
Datum
Name
Erstellt mit
Gez.
27.10.2020
PUFF1
Solid Edge
Freigeg.
28.10.2020
PUFF1
Blatt
SEG-Nummer
SEG-12322
Service-Kit
(Option)
Subassembly / Untergruppe
Status
F R E I G E G E B E N
1 von 1

Service-Kit (Option)

SEG-3475_01

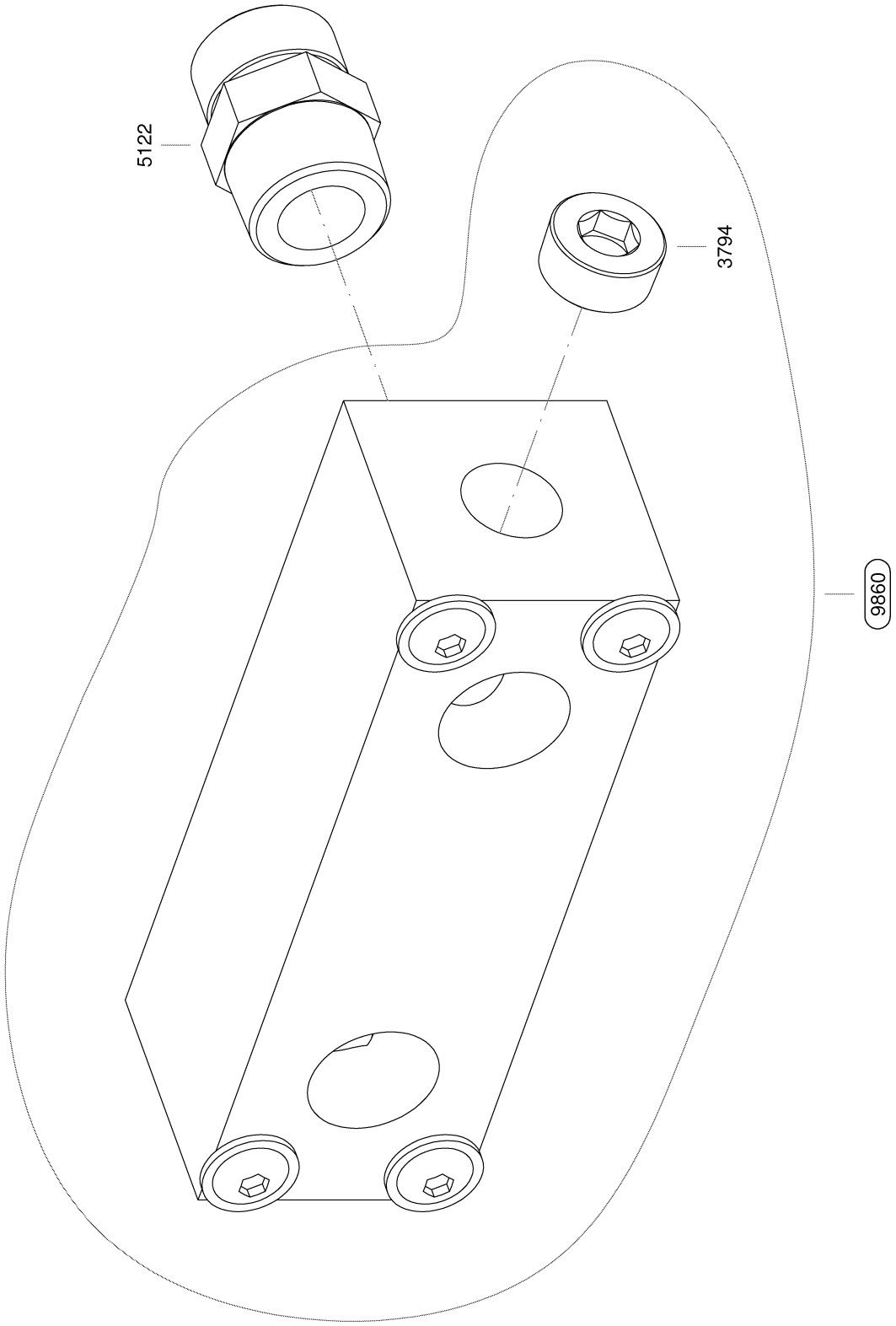

Service-Kit
(Option)

SEG-3476_01

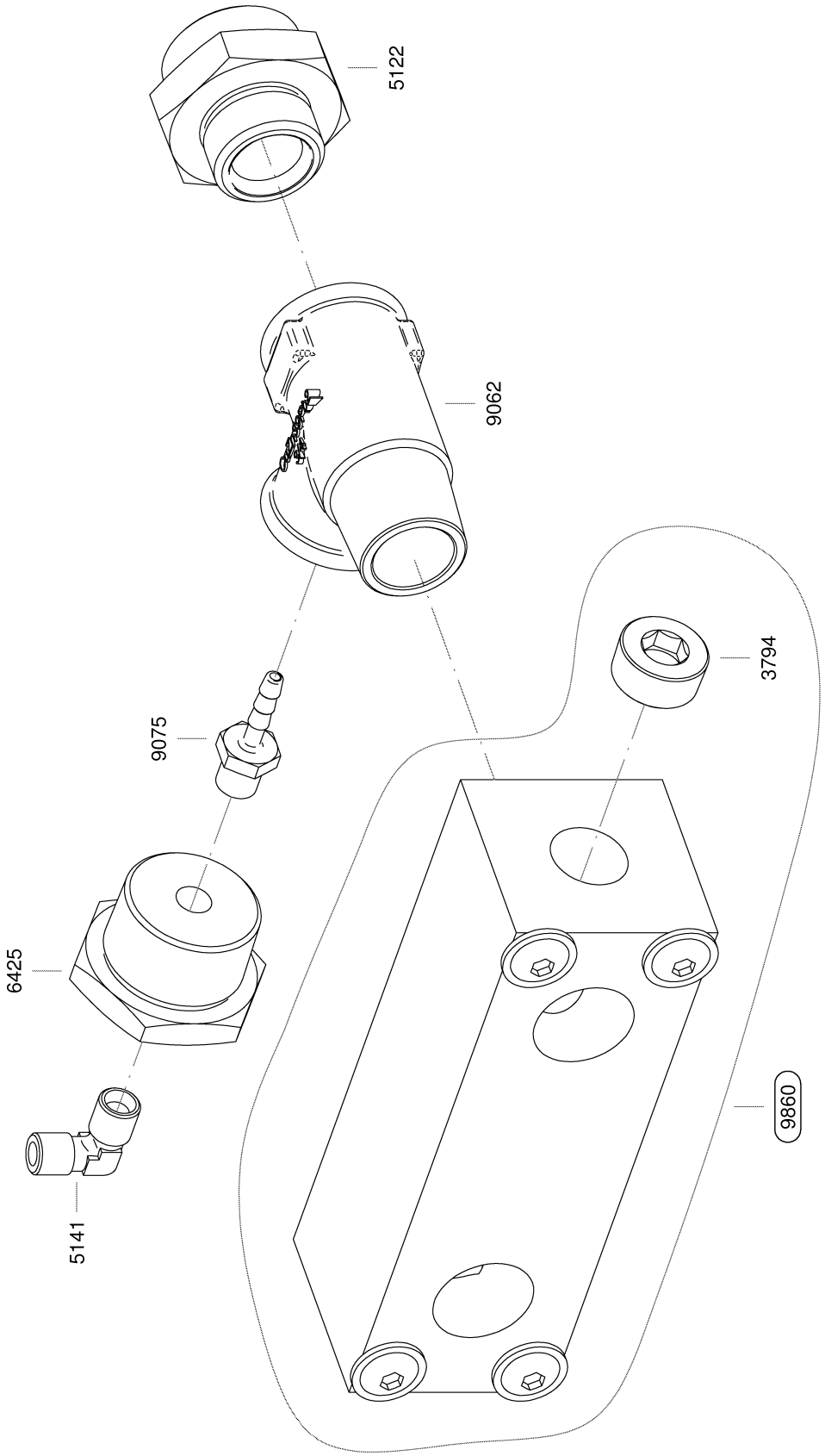

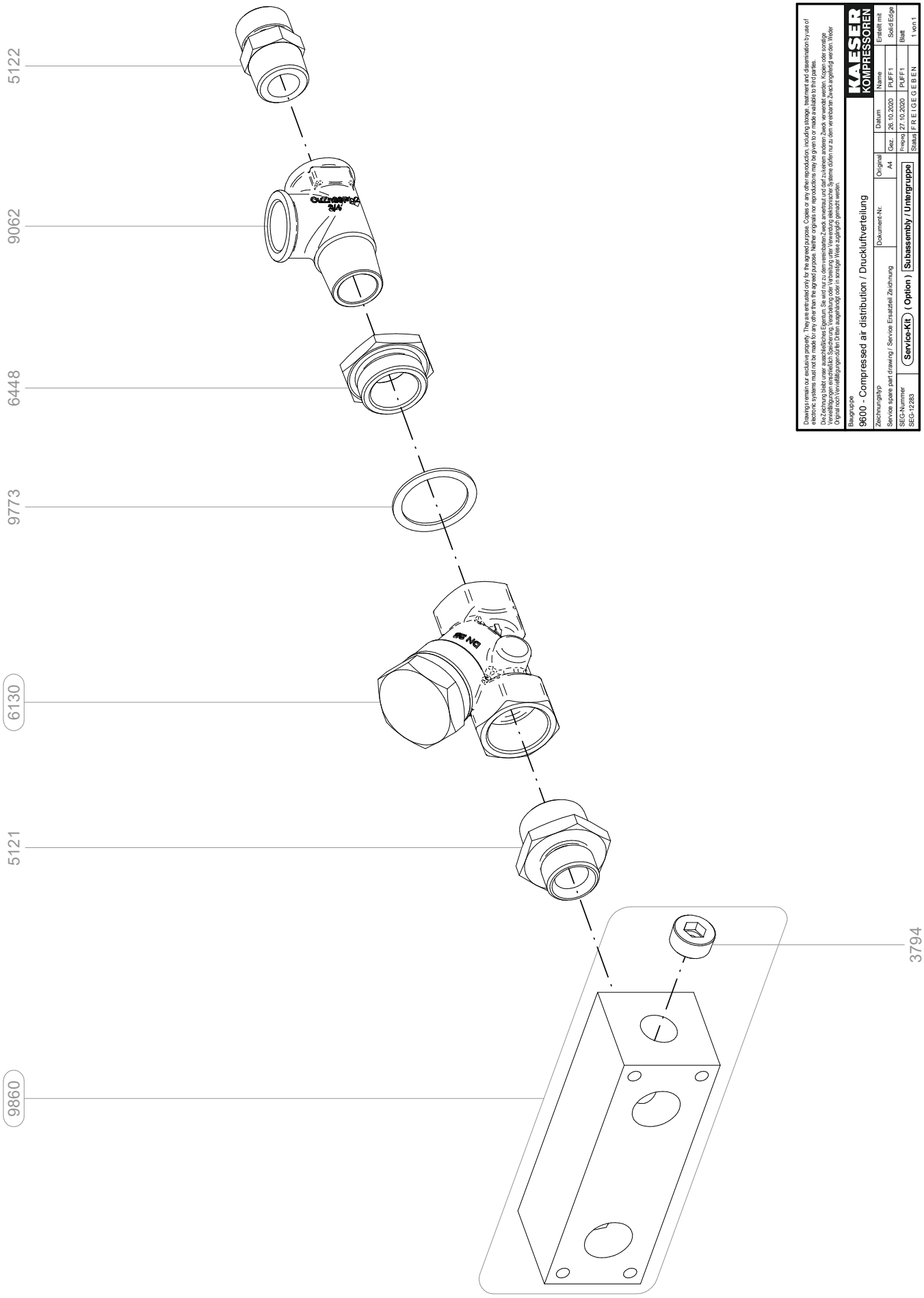
5122
9062
6448
9773
6130
5121
9860
3794
Drawings remain our exclusive property. They are entrusted only for the agreed purpose. Copies or any other reproduction, including storage, treatment and dissemination by use of electronic systems must not be made for any other than the agreed purpose. Neither originals nor reproductions may be given to or made available to third parties.
Die Zeichnung bleibt unser ausschließliches Eigentum. Sie wird nur zu dem vereinbarten Zweck anvertraut und darf zu keinem anderen Zweck verwendet werden. Kopien oder sonstige Vervielfältigungen einschließlich Speicherung, Verarbeitung oder Verbreitung unter Verwendung elektronischer Systeme dürfen nur zu dem vereinbarten Zweck angefertigt werden. Weder Original noch Vervielfältigungen dürfen Dritten ausgehändigt oder in sonstiger Weise zugänglich gemacht werden.
KAESER KOMPRESSOREN
Baugruppe
9600 - Compressed air distribution / Druckluftverteilung
Zeichnungstyp
Service spare part drawing / Service Ersatzteil Zeichnung
Dokument-Nr.
Original
A4
Datum
Name
Gez. 26.10.2020 PUFF1
Freigg. 27.10.2020 PUFF1
Erstellt mit
Solid Edge
Blatt
1 von 1
SEG-Nummer
SEG-12283
Service-Kit (Option) Subassembly / Untergruppe
Status F R E I G E G E B E N

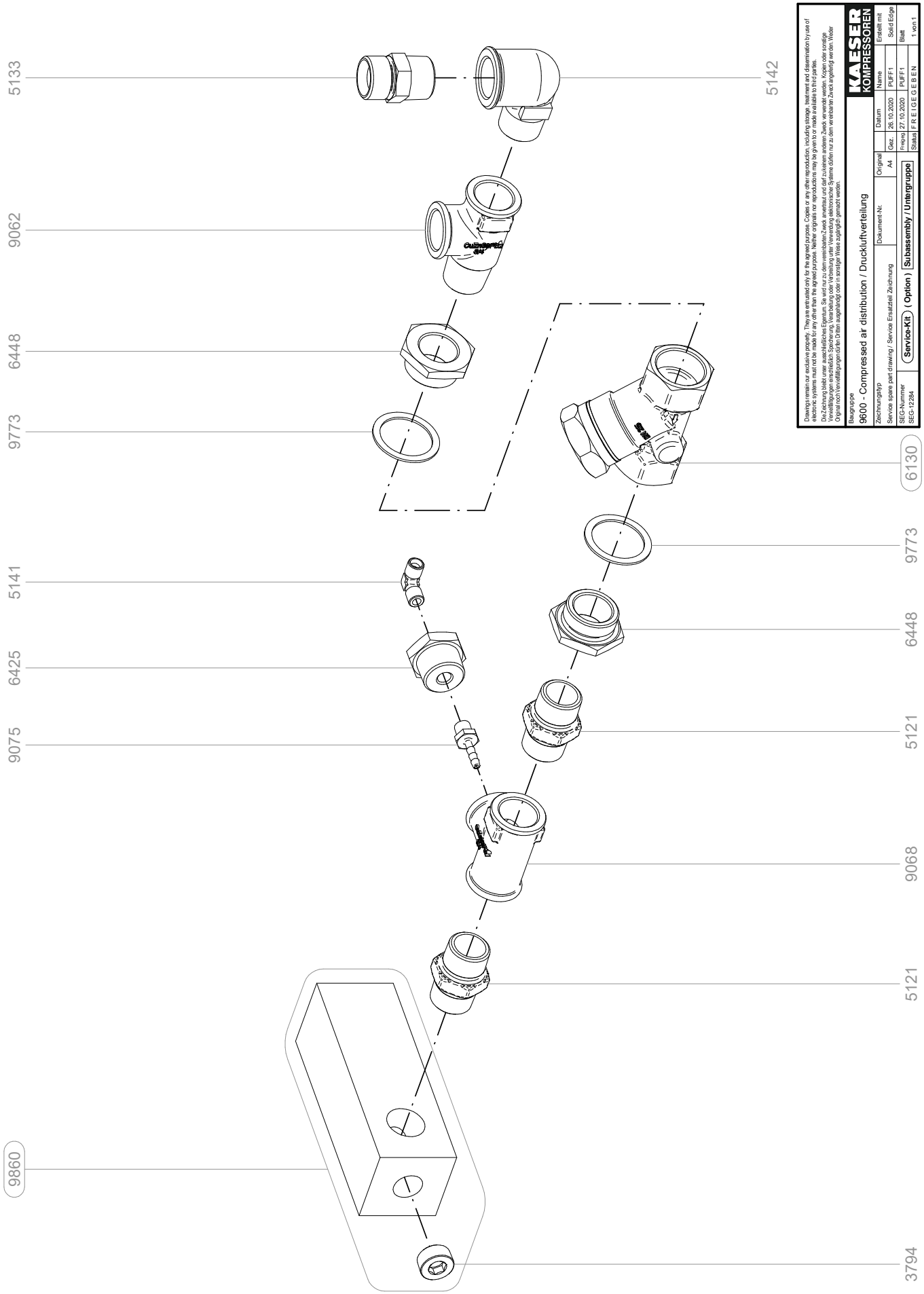
5133
9062
6448
9773
5141
6425
9075
9860
5142
6130
9773
6448
5121
9068
5121
3794
Baugruppe
9600 - Compressed air distribution / Druckluftverteilung
Zeichnungstyp
Service spare part drawing / Service Ersatzteil Zeichnung
Dokument-Nr.
Original
A4
Datum
26.10.2020
27.10.2020
Name
PLIFF1
PLIFF1
Erstellt mit
SolidEdge
Blatt
1 von 1
SEG-Nummer
SEG-12284
Service-Kit (Option) Subassembly / Untergruppe
Status FREIGEGEBEN

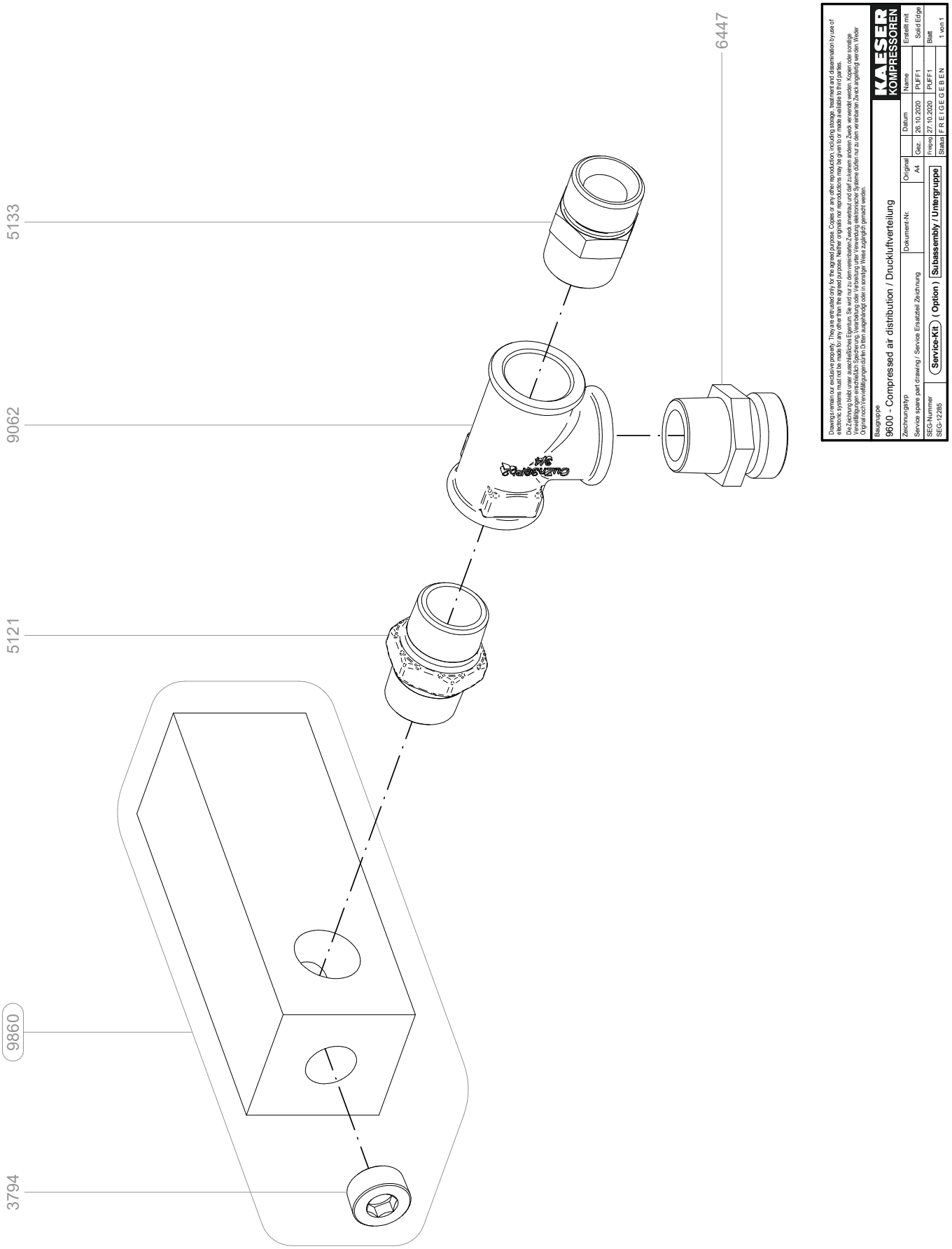
6447
5133
9062
5121
9860
3794
Drawings remain our exclusive property. They are entrusted only for the agreed purpose. Copies or any other reproduction, including storage, treatment and dissemination by use of electronic systems must not be made for any other than the agreed purpose. Neither originals nor reproductions may be given to or made available to third parties.
Die Zeichnung bleibt unser ausschließliches Eigentum. Sie wird nur zu dem vereinbarten Zweck anvertraut und darf zu keinem anderen Zweck verwendet werden. Kopien oder sonstige Vervielfältigungen einschließlich Speicherung, Verarbeitung oder Verbreitung unter Verwendung elektronischer Systeme dürfen nur zu dem vereinbarten Zweck angefertigt werden. Weder Original noch Vervielfältigungen sind an Dritten ausgehändigt oder in sonstiger Weise zugänglich gemacht werden.
KAESER KOMPRESSOREN
Baugruppe
9600 - Compressed air distribution / Druckluftverteilung
Zeichnungstyp
Service spare part drawing / Service Ersatzteil Zeichnung
Dokument-Nr.
Original
A4
Datum
Name
Erstellt mit
Gez. 26.10.2020 PUFF1 Solid Edge
Freigg. 27.10.2020 PUFF1
Blatt
1 von 1
Status F R E I G E G E B E N
SEG-Nummer
SEG-12285
Service-Kit (Option) Subassembly / Untergruppe

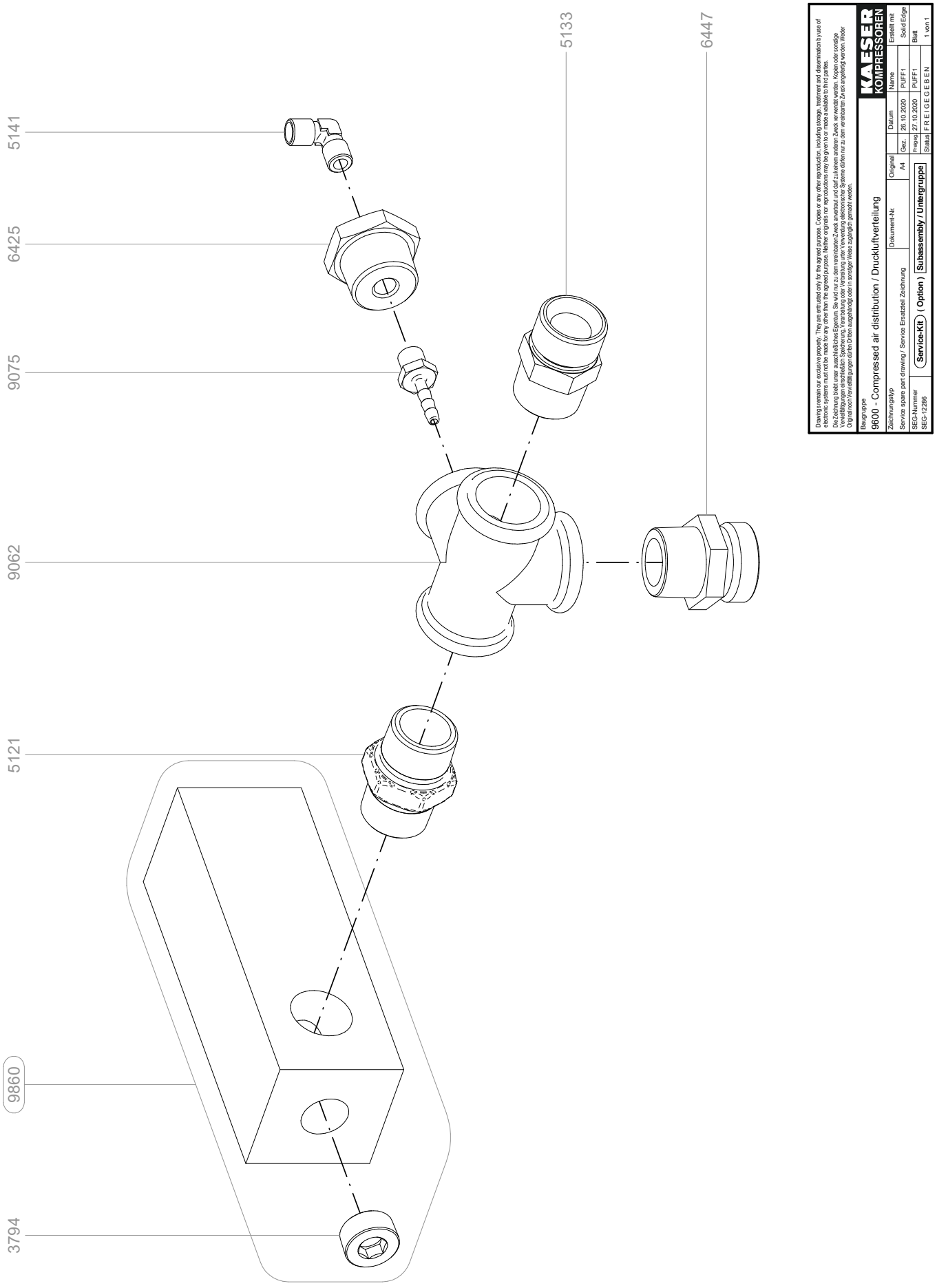

Drawings remain our exclusive property. They are entrusted only for the agreed purpose. Copies or any other reproduction, including storage, treatment and dissemination by use of electronic systems must not be made for any other than the agreed purpose. Neither originals nor reproductions may be given to or made available to third parties.
Die Zeichnung bleibt unser ausschließliches Eigentum. Sie wird nur zu dem vereinbarten Zweck anvertraut und darf zu keinem anderen Zweck verwendet werden. Kopien oder sonstige Vervielfältigungen einschließlich Speicherung, Verarbeitung oder Verwendung elektronischer Systeme dürfen nur zu dem vereinbarten Zweck angefertigt werden. Weder Original noch Vervielfältigungen dürfen Dritten ausgehändigt oder in sonstiger Weise zugänglich gemacht werden.

KAESER KOMPRESSOREN

Baugruppe
9600 - Compressed air distribution / Druckluftverteilung

Zeichnungstyp	Dokument-Nr.	Original	Datum	Name	Erstellt mit
Service spare part drawing / Service Ersatzteil Zeichnung		A4	Gez. 26.10.2020	PLIFF1	SolidEdge
			Freigabe 27.10.2020	PLIFF1	Blatt
SEG-Nummer	Service-Kit (Option)	Subassembly / Untergruppe	Status FREIGEGEBEN		1 von 1
SEG-12286					

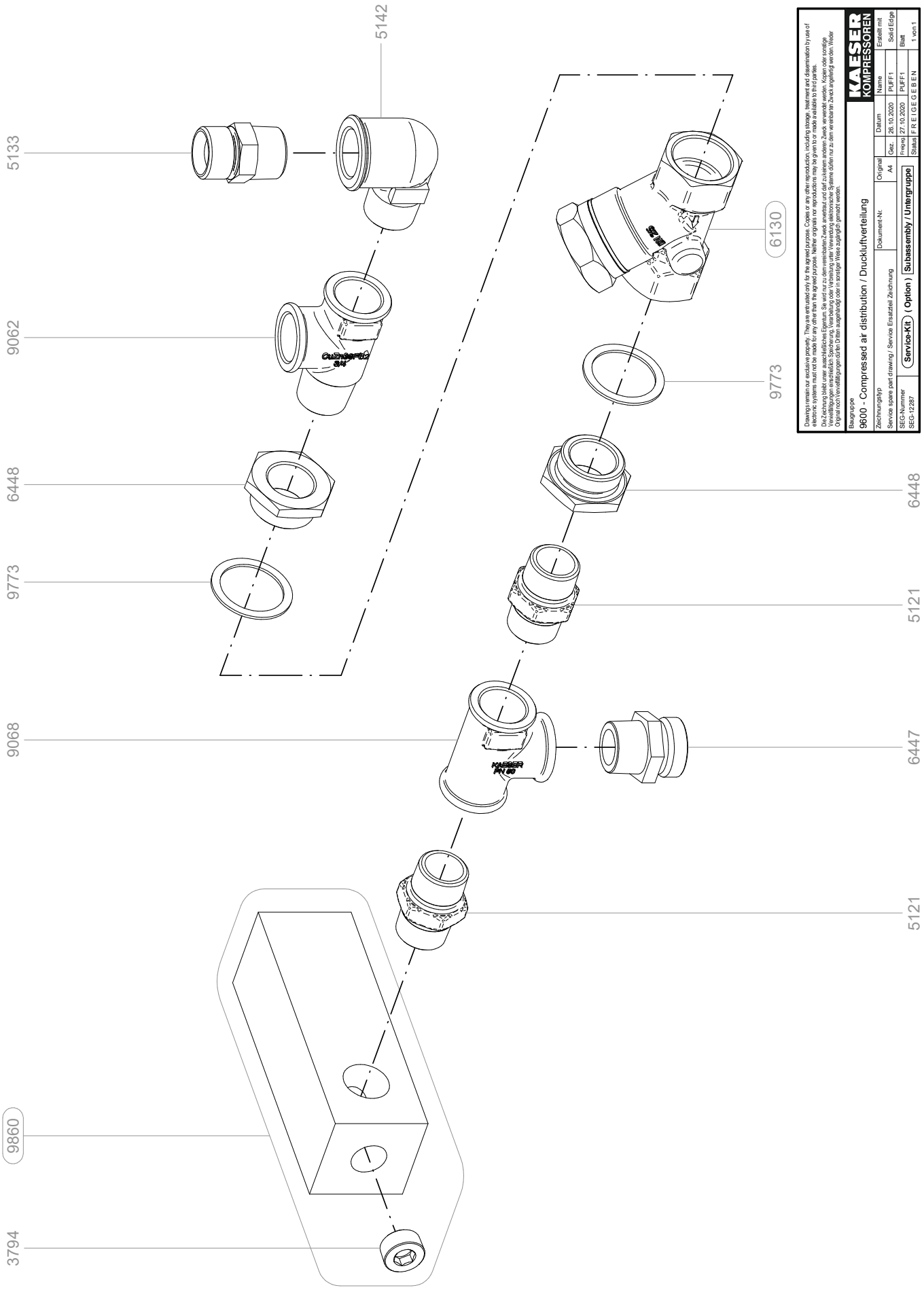
5142
5133
9062
6448
9773
9068
9860
3794
6130
9773
6448
5121
6447
5121
Drawings remain our exclusive property. They are entrusted only for the agreed purpose. Copies or any other reproduction, including storage, treatment and dissemination by use of electronic systems must not be made for any other than the agreed purpose. Neither originals nor reproductions may be given to or made available to third parties.
Die Zeichnung bleibt unser ausschließliches Eigentum. Sie wird nur zu dem vereinbarten Zweck anvertraut und darf zu keinem anderen Zweck verwendet werden. Kopien oder sonstige Vervielfältigungen einschließlich Speicherung, Verarbeitung oder Verbreitung unter Verwendung elektronischer Systeme dürfen nur zu dem vereinbarten Zweck angefertigt werden. Weder Original noch Vervielfältigungen sind an Dritten ausgehändigt oder in sonstiger Weise zugänglich gemacht werden.
KAESER KOMPRESSOREN
Baugruppe
9600 - Compressed air distribution / Druckluftverteilung
Zeichnungstyp
Service spare part drawing / Service Ersatzteil Zeichnung
SEG-Nummer
SEG-12287
Service-Kit (Option) Subassembly / Untergruppe
Dokument-Nr.
Original
A4
Datum
Name
Gez. 26.10.2020 PUFF1
Freigab 27.10.2020 PUFF1
Status F R E I G E G E B E N
Erstellt mit
Solid Edge
Blatt
1 von 1

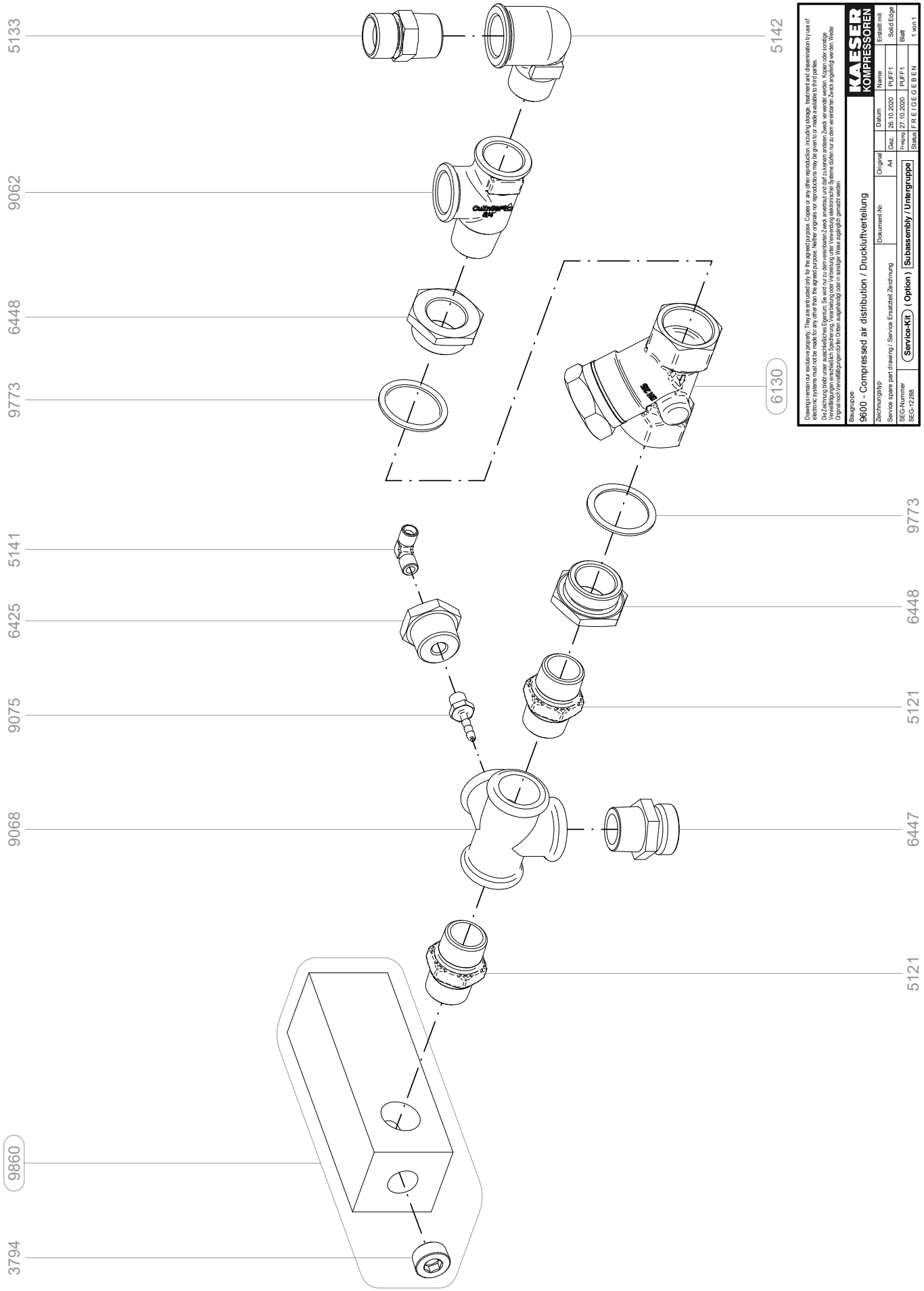
5133
9062
6448
9773
5141
6425
9075
9068
9860
3794
5142
6130
9773
6448
5121
6447
5121
Baugruppe
9600 - Compressed air distribution / Druckluftverteilung
Zeichnungstyp
Service spare part drawing / Service Ersatzteil Zeichnung
Dokument-Nr.
Original
A4
Datum
26.10.2020
27.10.2020
Name
PLIFF1
PLIFF1
Erstellt mit
SolidEdge
Blatt
1 von 1
SEG-Nummer
SEG-12288
Service-Kit (Option) Subassembly / Untergruppe
Status FREIGEGEBEN

Service-Kit
(Option)

SEG-3483_01

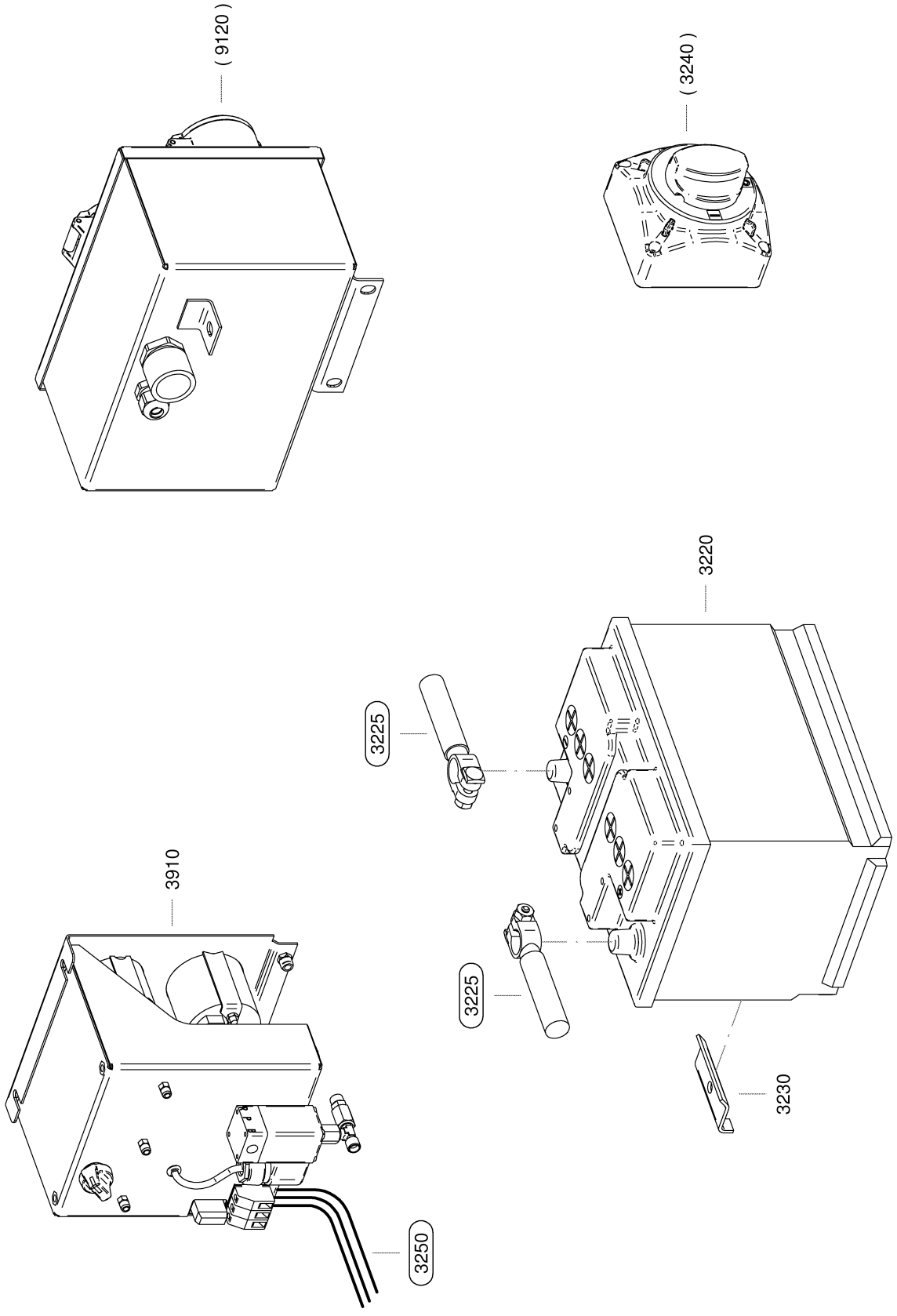

Service-Kit
(Option)

SEG-3484_01

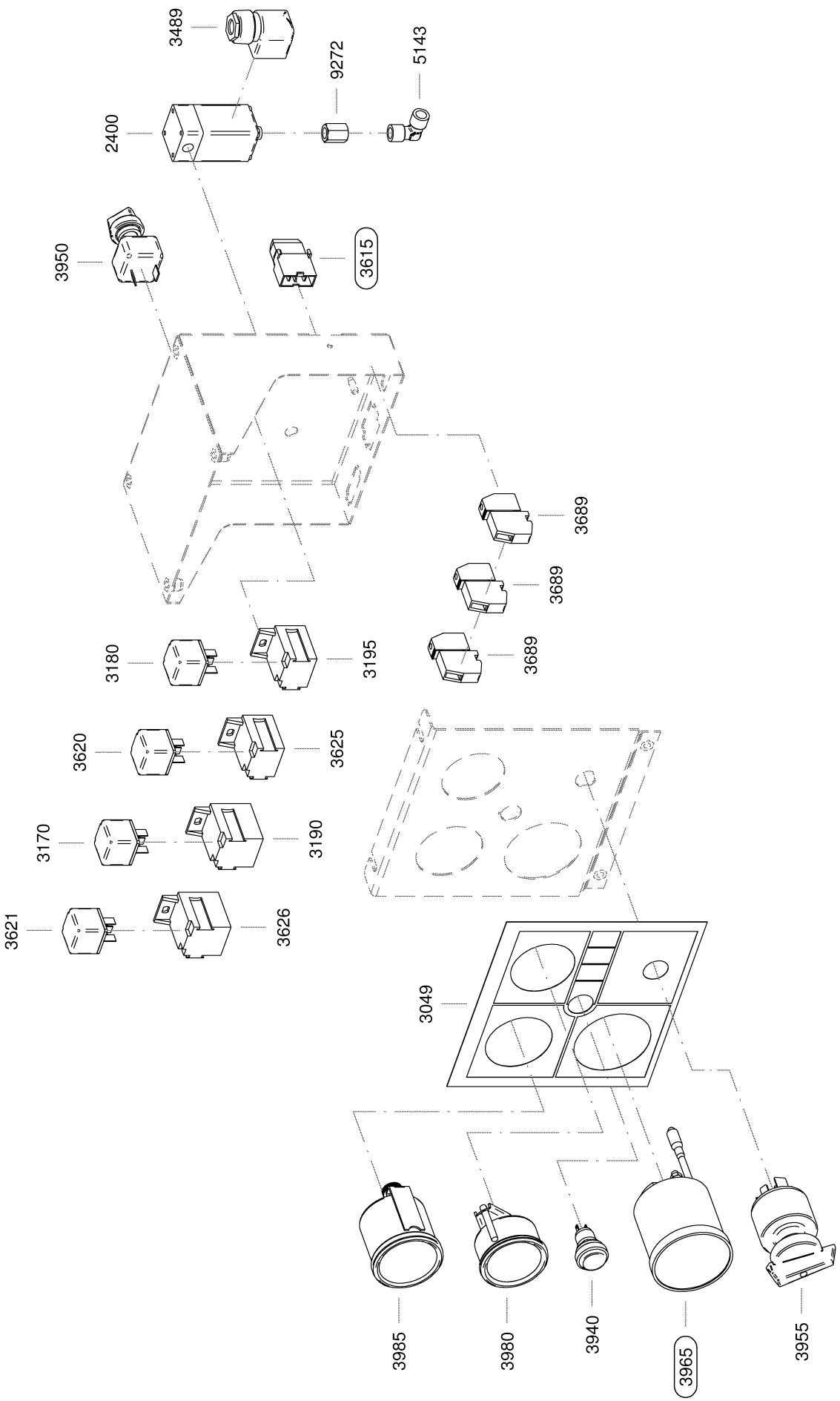

Service-Kit (Option)

SEG-3930_01

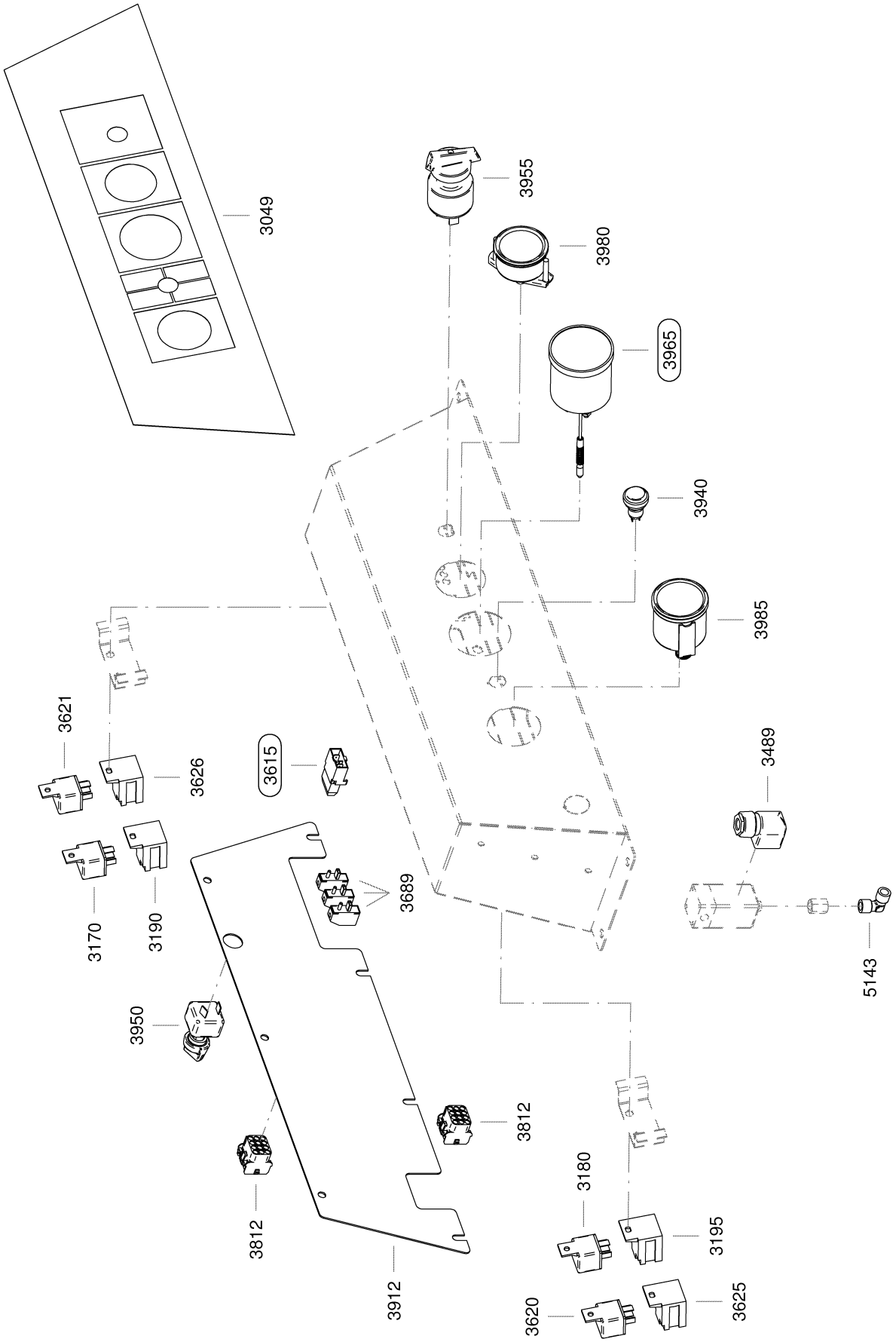

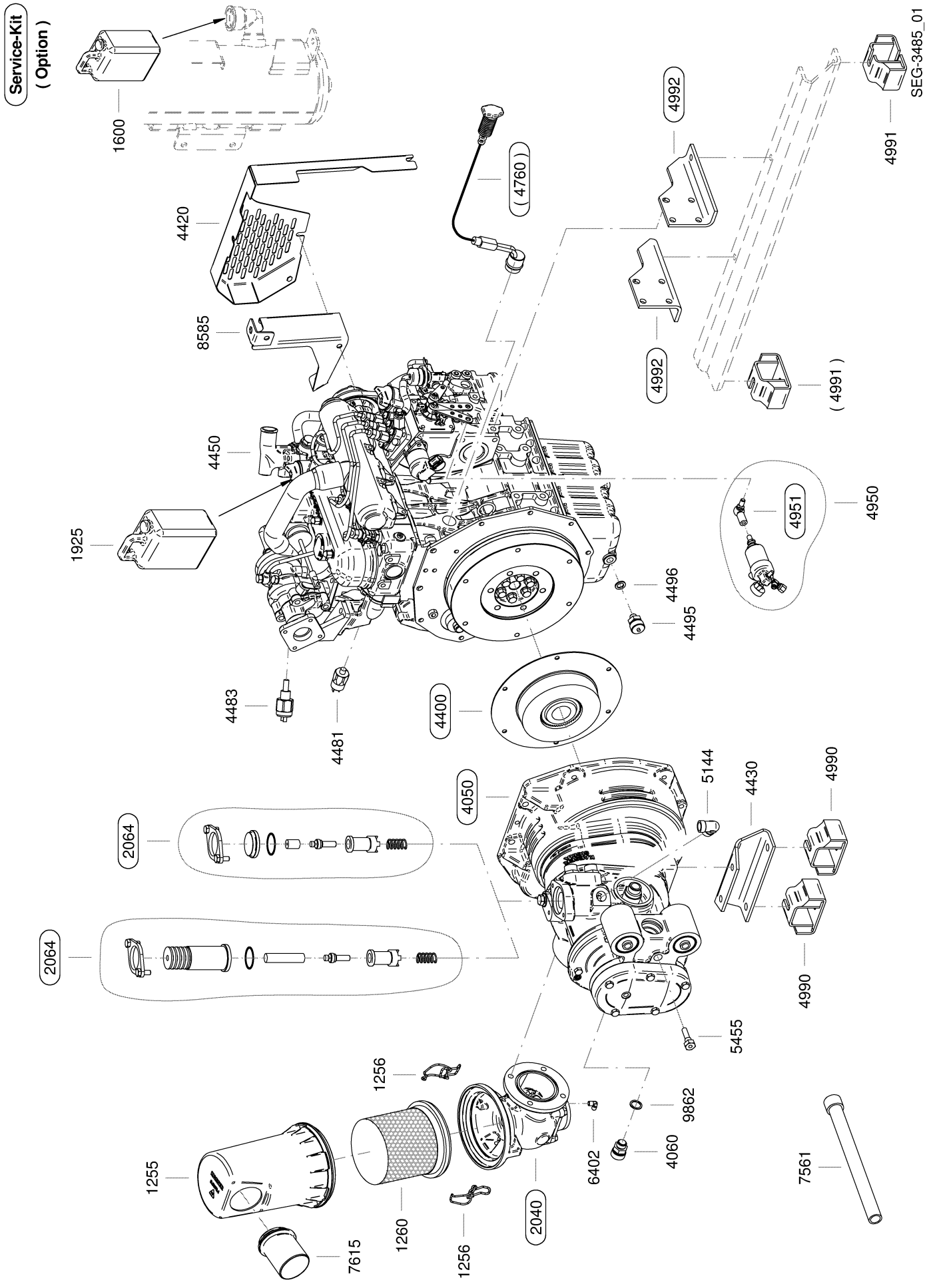
Service-Kit
(Option)
1600
4420
(4760)
8585
4992
4991
SEG-3485_01
4992
(4991)
4450
1925
4951
4950
4496
4495
4483
4481
4400
4050
5144
4430
4990
2064
2064
4990
5455
1256
9862
4060
6402
7561
1255
1260
1256
2040
7615

Service-Kit
(Option)

SEG-3486_01

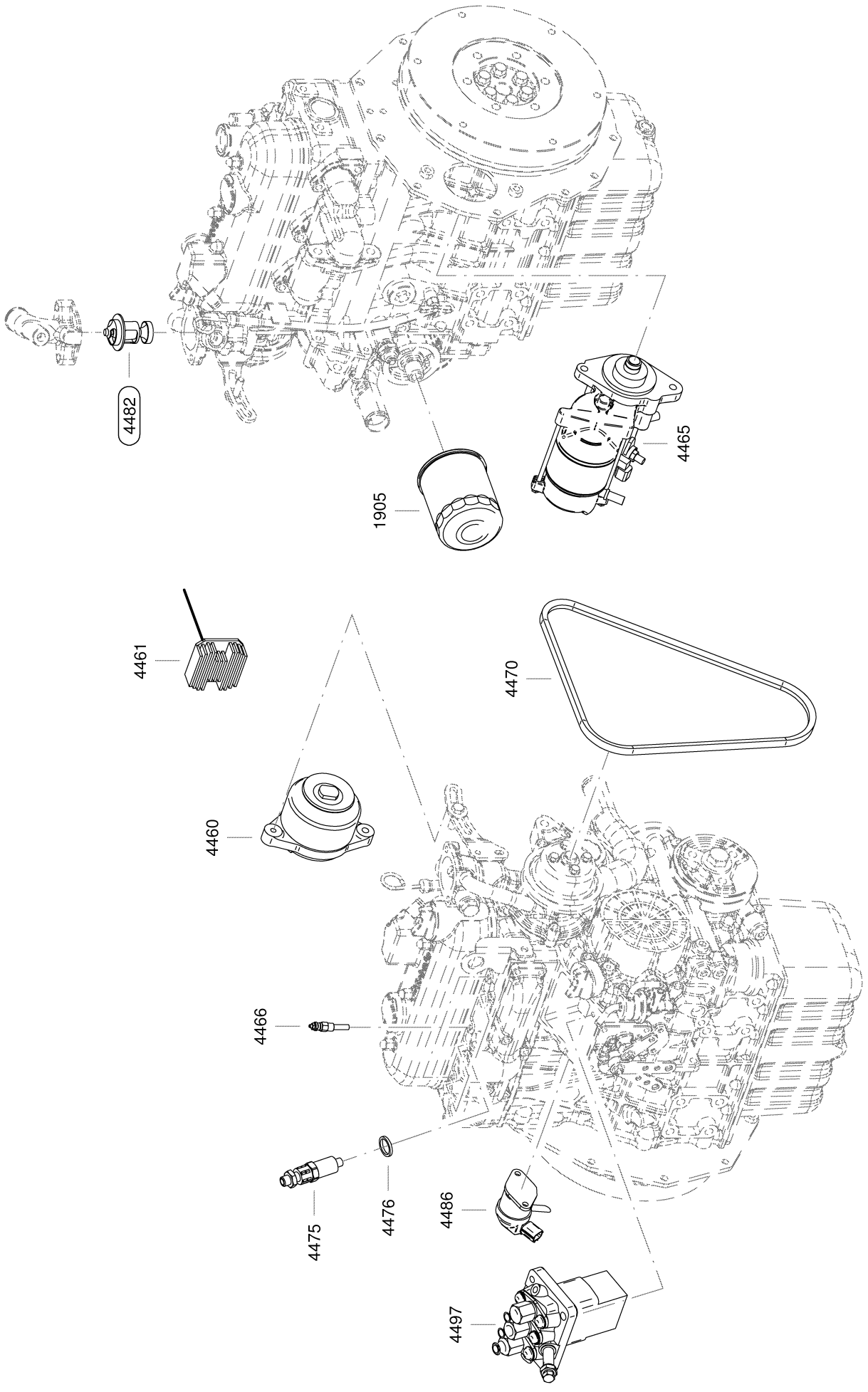

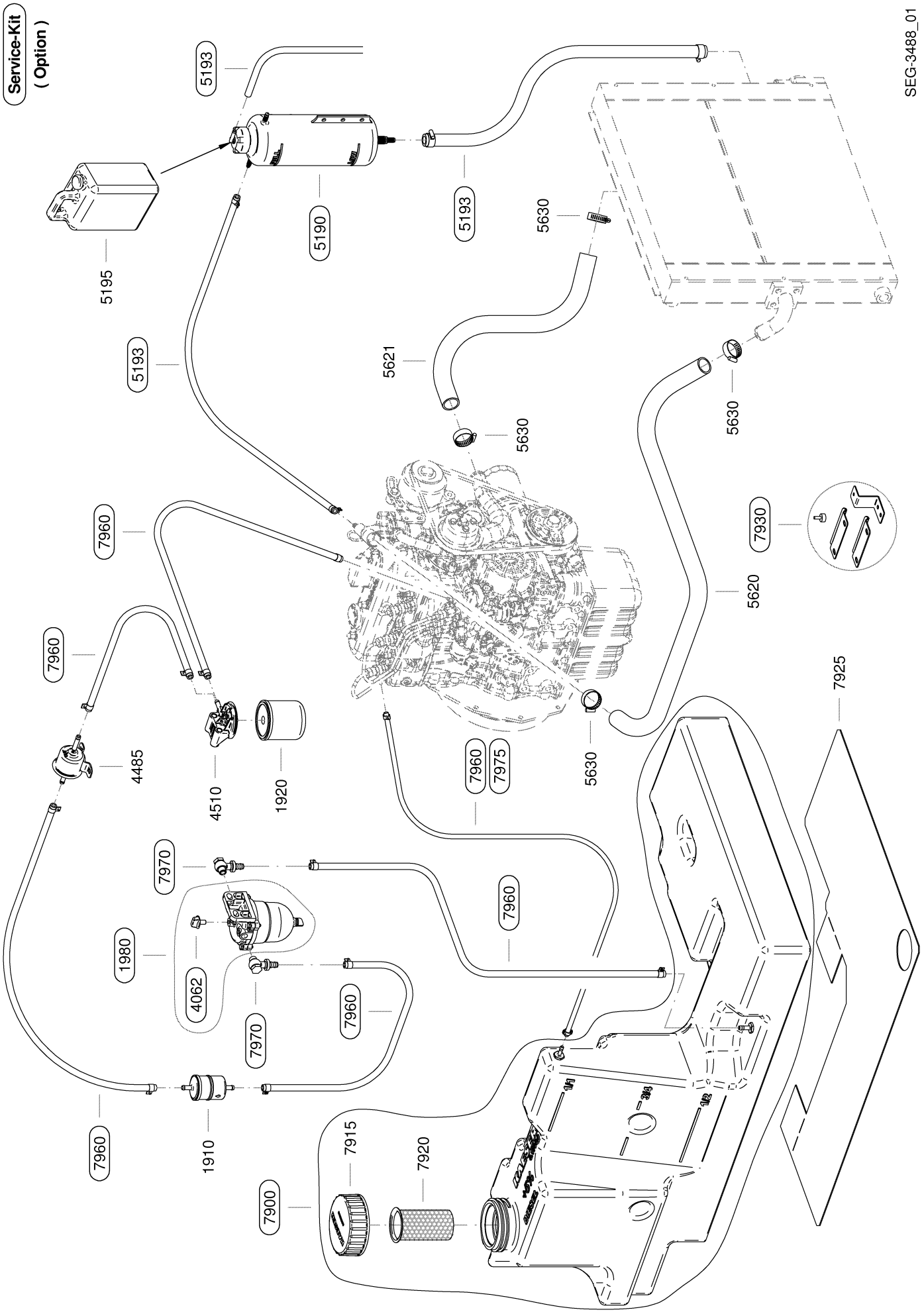
Service-Kit
(Option)
SEG-3488_01
5193
5190
5195
5630
5621
7960
7930
5620
4485
4510
1920
7975
7925
7970
1980
4062
1910
7915
7920
7900

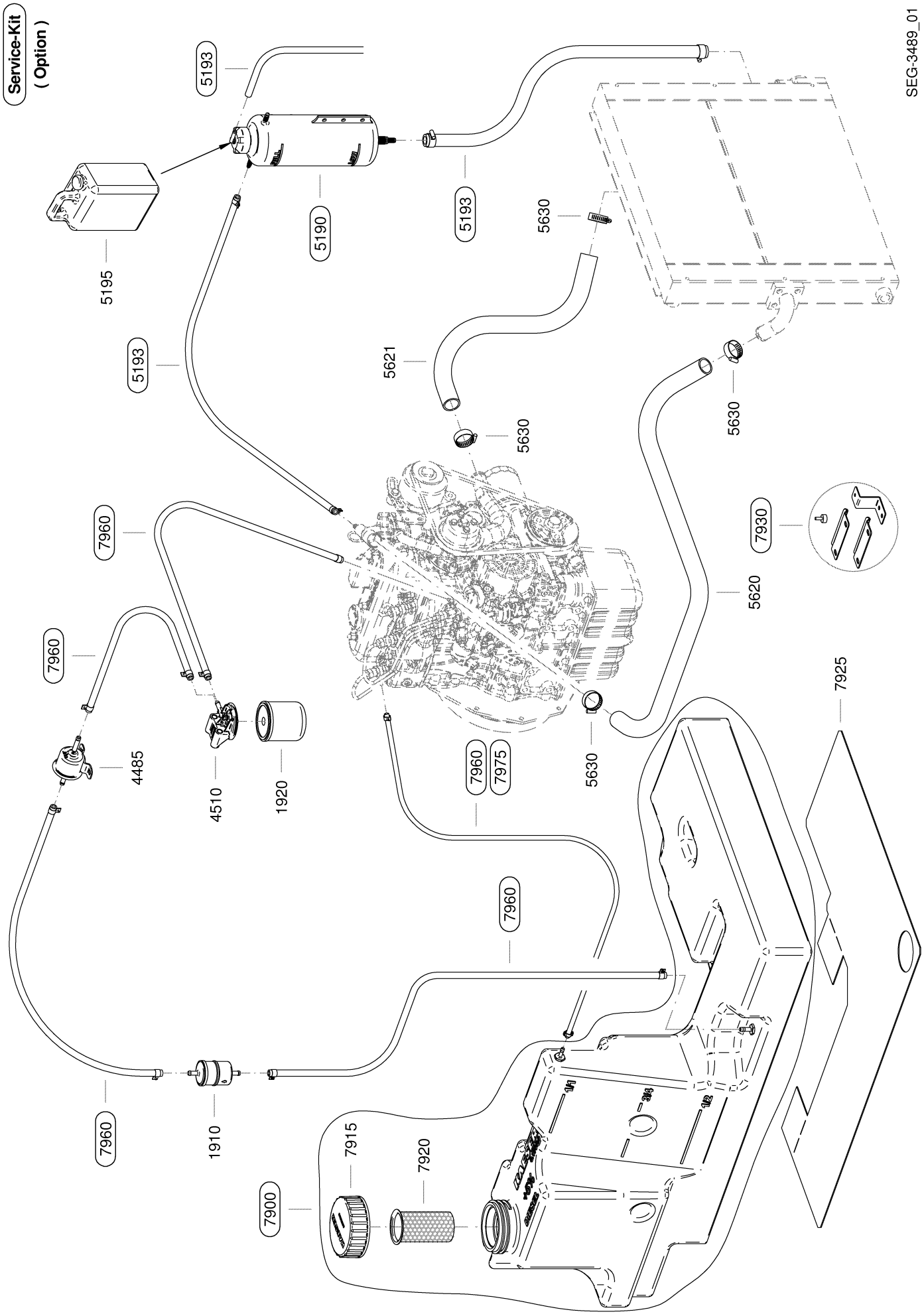
Service-Kit
(Option)
SEG-3489_01
5193
5190
5193
5630
5195
5193
5621
5630
5630
7960
7930
5620
7960
7925
4485
4510
1920
7960
7975
5630
7960
7960
1910
7915
7920
7900

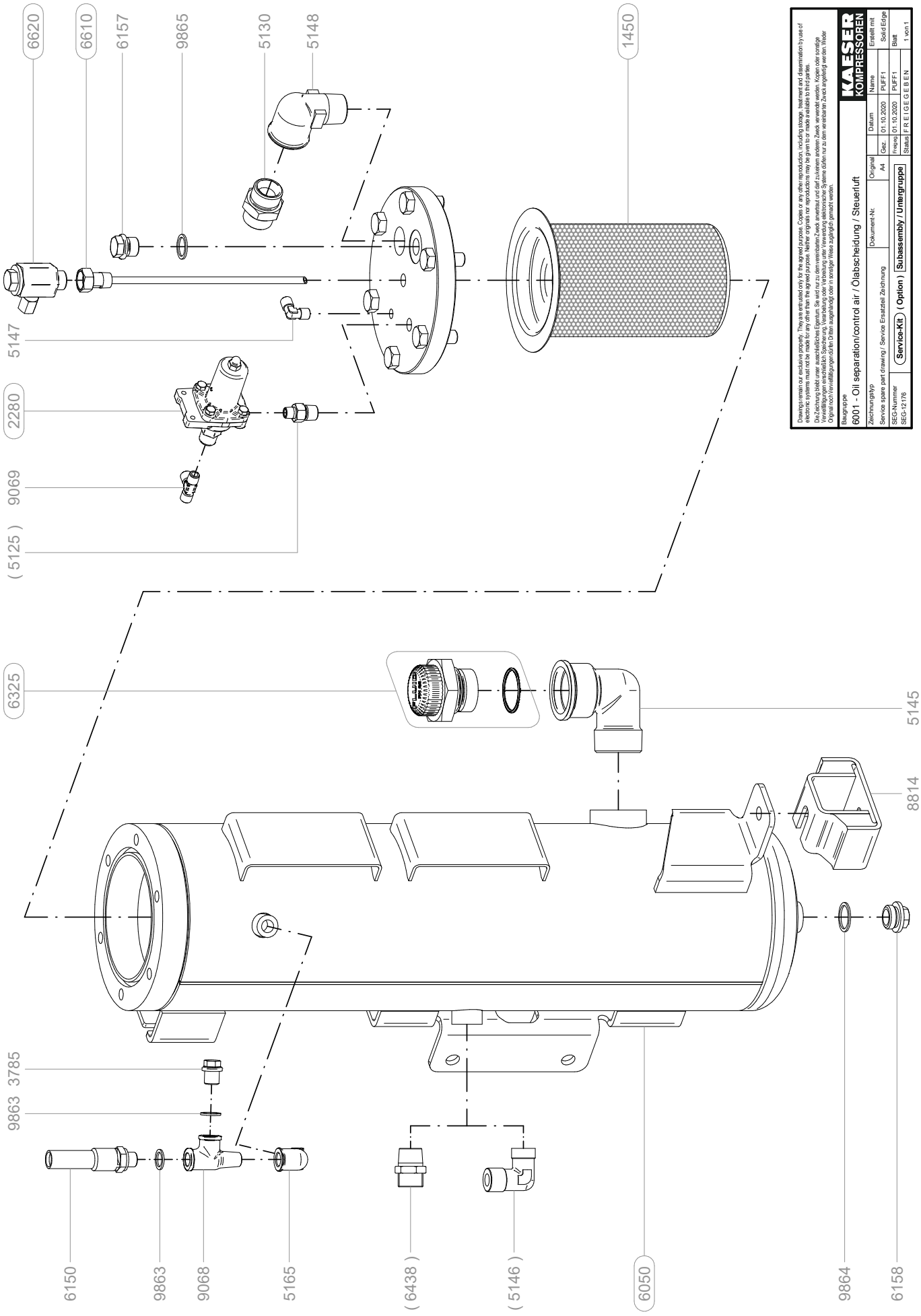
6620
6610
6157
9865
5130
5148
1450
5147
2280
9069
(5125)
6325
5145
8814
9863
3785
6150
9863
9068
5165
(6438)
(5146)
6050
9864
6158
Baugruppe
6001 - Oil separation/control air / Ölabscheidung / Steuerluft
Zeichnungstyp
Service spare part drawing / Service Ersatzteil Zeichnung
Dokument-Nr.
Original
A4
Datum
01.10.2020
01.10.2020
Name
PLIFF1
PLIFF1
Ersatzt. mit
Solid Edge
Blatt
1 von 1
SEG-Nummer
SEG-12176
Service-Kit
(Option)
Subassembly / Untergruppe
Status FREIGEGEBEN

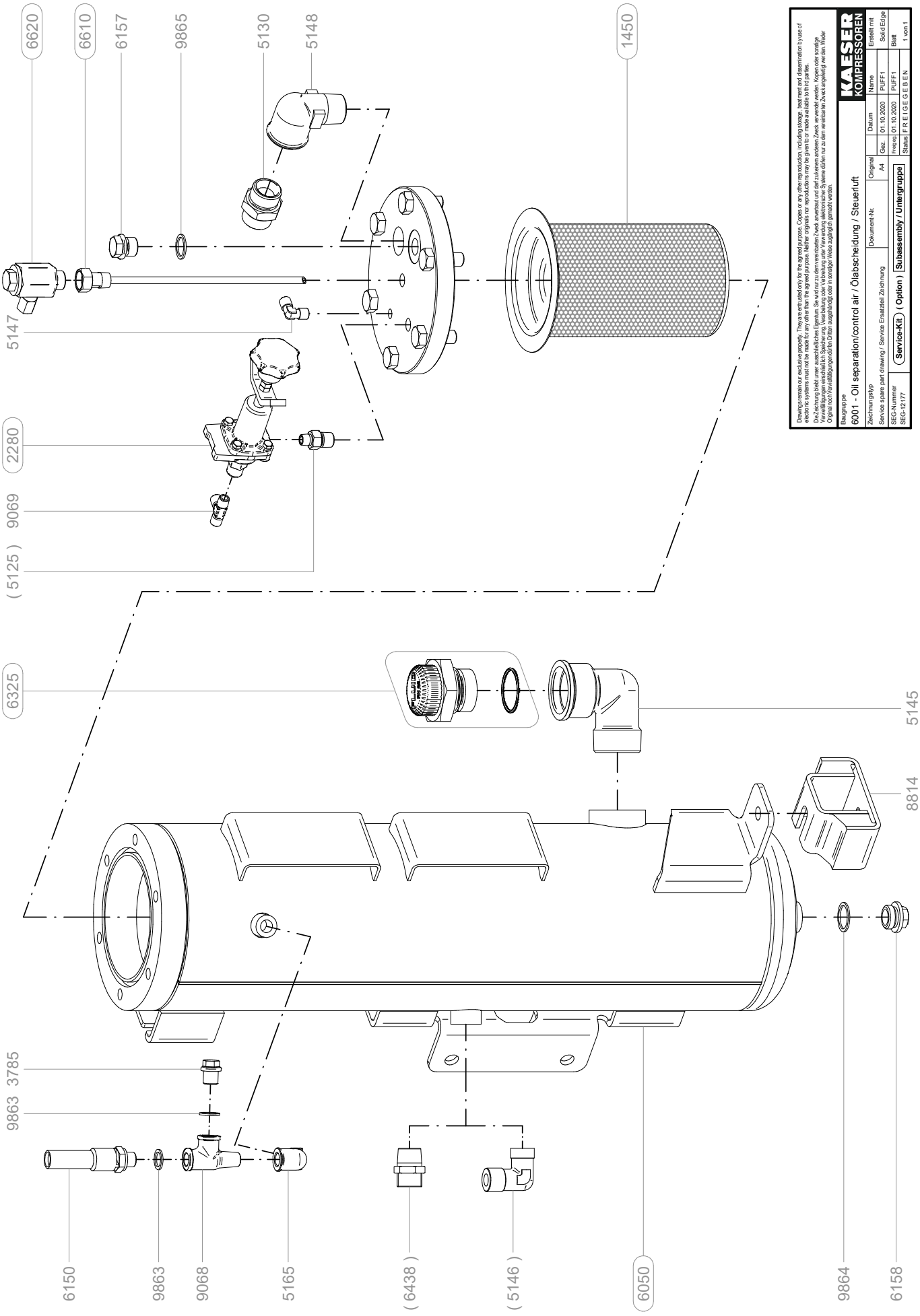
6620
6610
6157
9865
5130
5148
1450
5147
2280
9069
(5125)
6325
5145
8814
9863
3785
6150
9863
9068
5165
(6438)
(5146)
6050
9864
6158
Drawings remain our exclusive property. They are entrusted only for the agreed purpose. Copies or any other reproduction, including storage, treatment and dissemination by use of electronic systems must not be made for any other than the agreed purpose. Neither originals nor reproductions may be given to or made available to third parties.
Die Zeichnung bleibt unser ausschließliches Eigentum. Sie wird nur zu dem vereinbarten Zweck anvertraut und darf zu keinem anderen Zweck verwendet werden. Kopien oder sonstige Vervielfältigungen einschließlich Speicherung, Verarbeitung oder Verbreitung unter Verwendung elektronischer Systeme dürfen nur zu dem vereinbarten Zweck angefertigt werden. Weder Original noch Vervielfältigungen dürfen Dritten ausgehändigt oder in sonstiger Weise zugänglich gemacht werden.
KAESER KOMPRESSOREN
Baugruppe
6001 - Oil separation/control air / Ölabscheidung / Steuerluft
Zeichnungstyp
Service spare part drawing / Service Ersatzteil Zeichnung
SEG-Nummer
SEG-12177
Service-Kit (Option) Subassembly / Untergruppe
Dokument-Nr.
Original
A4
Datum
Name
Gez. 01.10.2020 PUFF1
Freigg. 01.10.2020 PUFF1
Status F R E I G E G E B E N
Erstellt mit
Solid Edge
Blatt
1 von 1

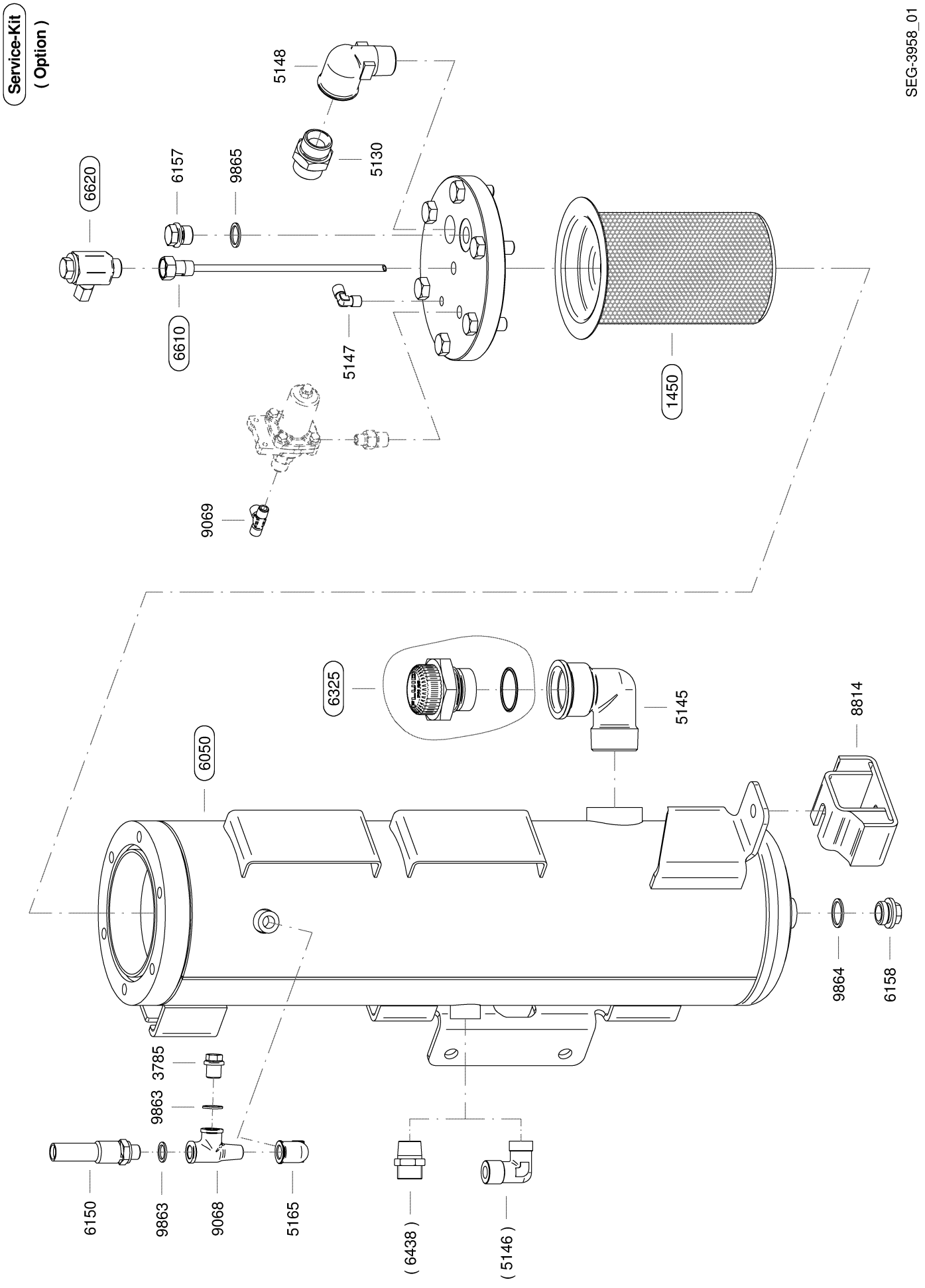
Service-Kit
(Option)
SEG-3958_01
5148
5130
6620
6157
9865
6610
5147
1450
9069
6325
5145
8814
6050
9864
6158
3785
9863
6150
9863
9068
5165
(6438)
(5146)

Service-Kit
(Option)

8000 Karosserie / Bodywork

SEG-3491_01

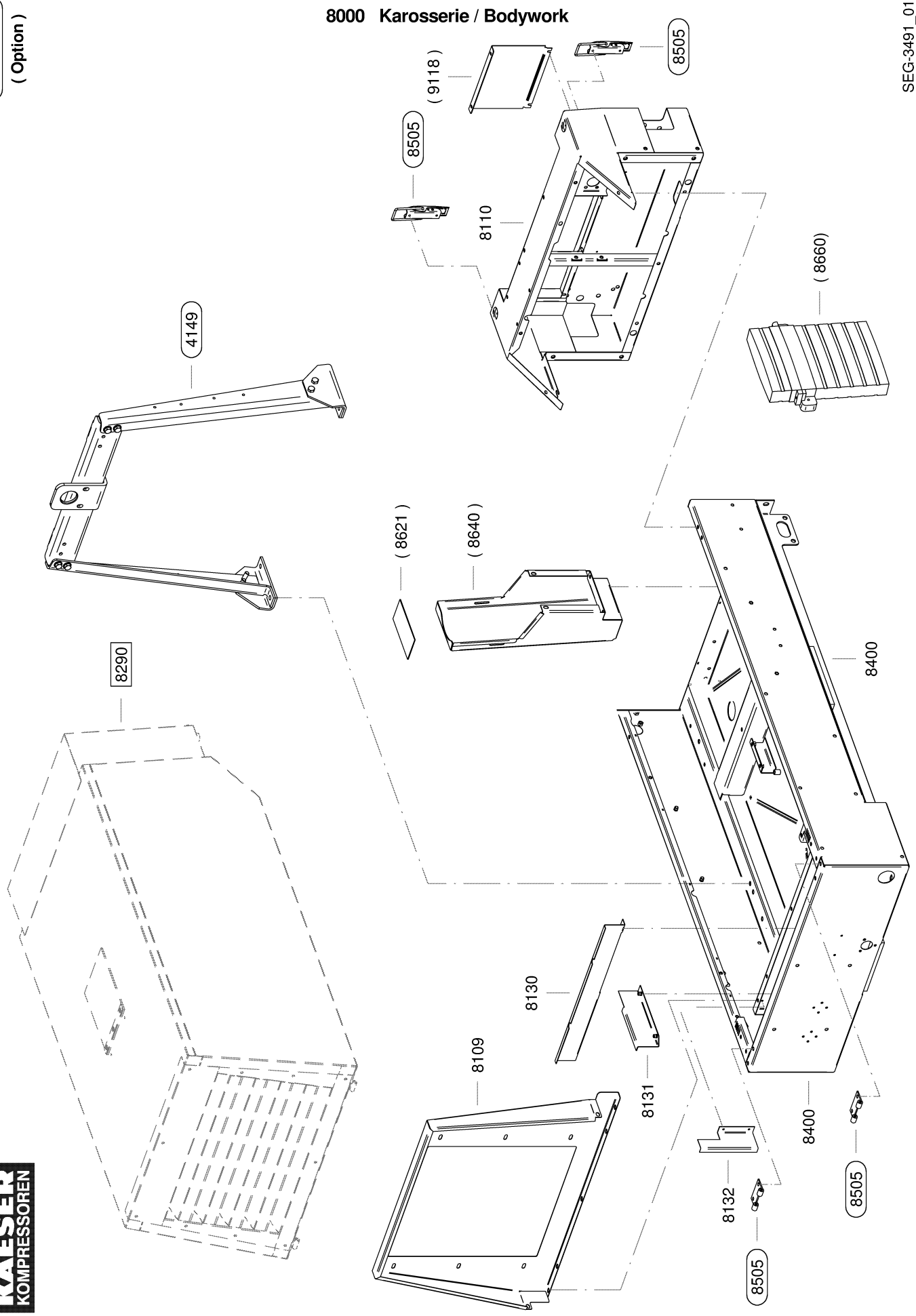

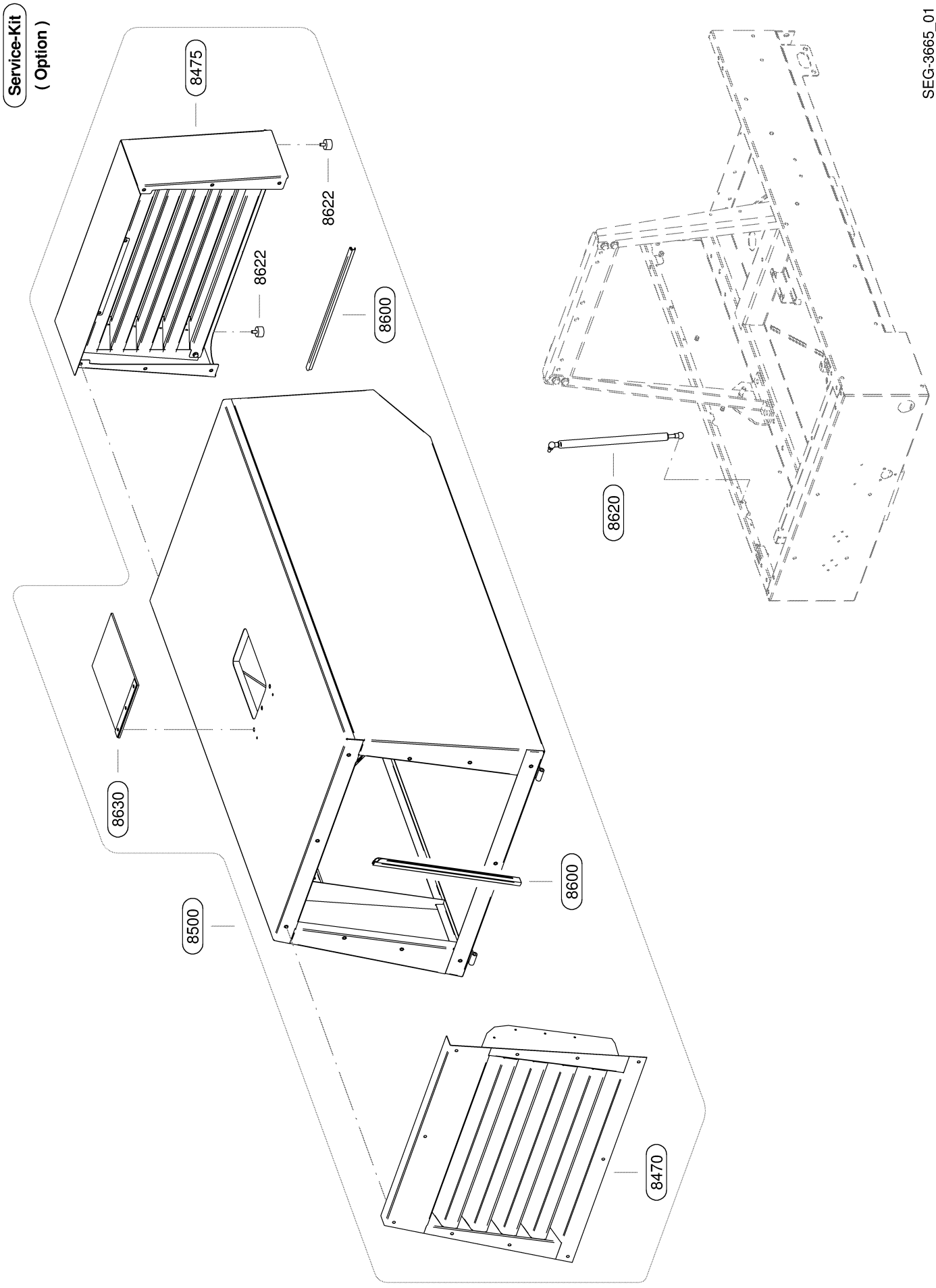
Service-Kit
(Option)
8475
8622
8622
8600
8620
8630
8600
8500
8470
SEG-3665_01

Service-Kit (Option)

SEG-3492_01

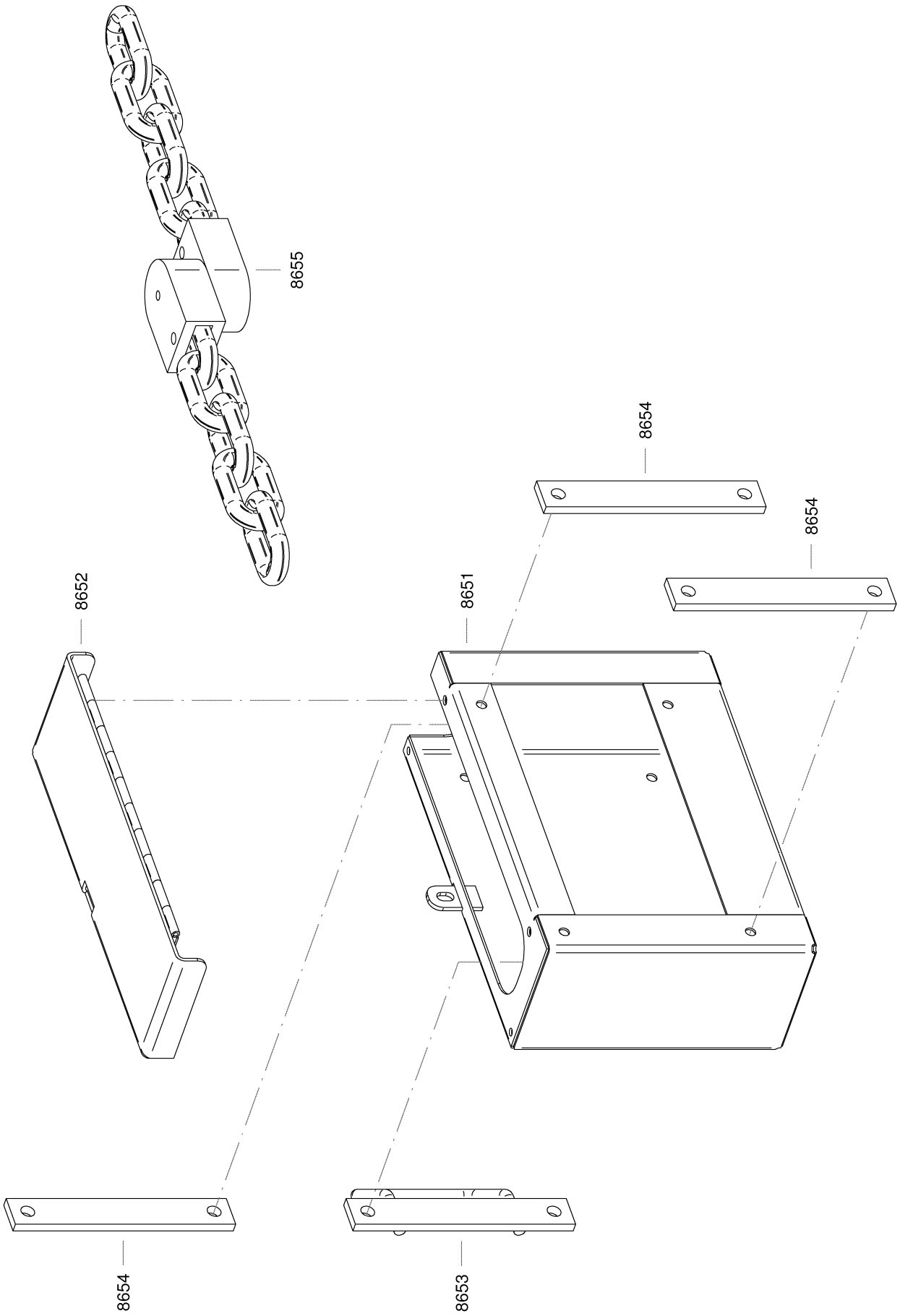

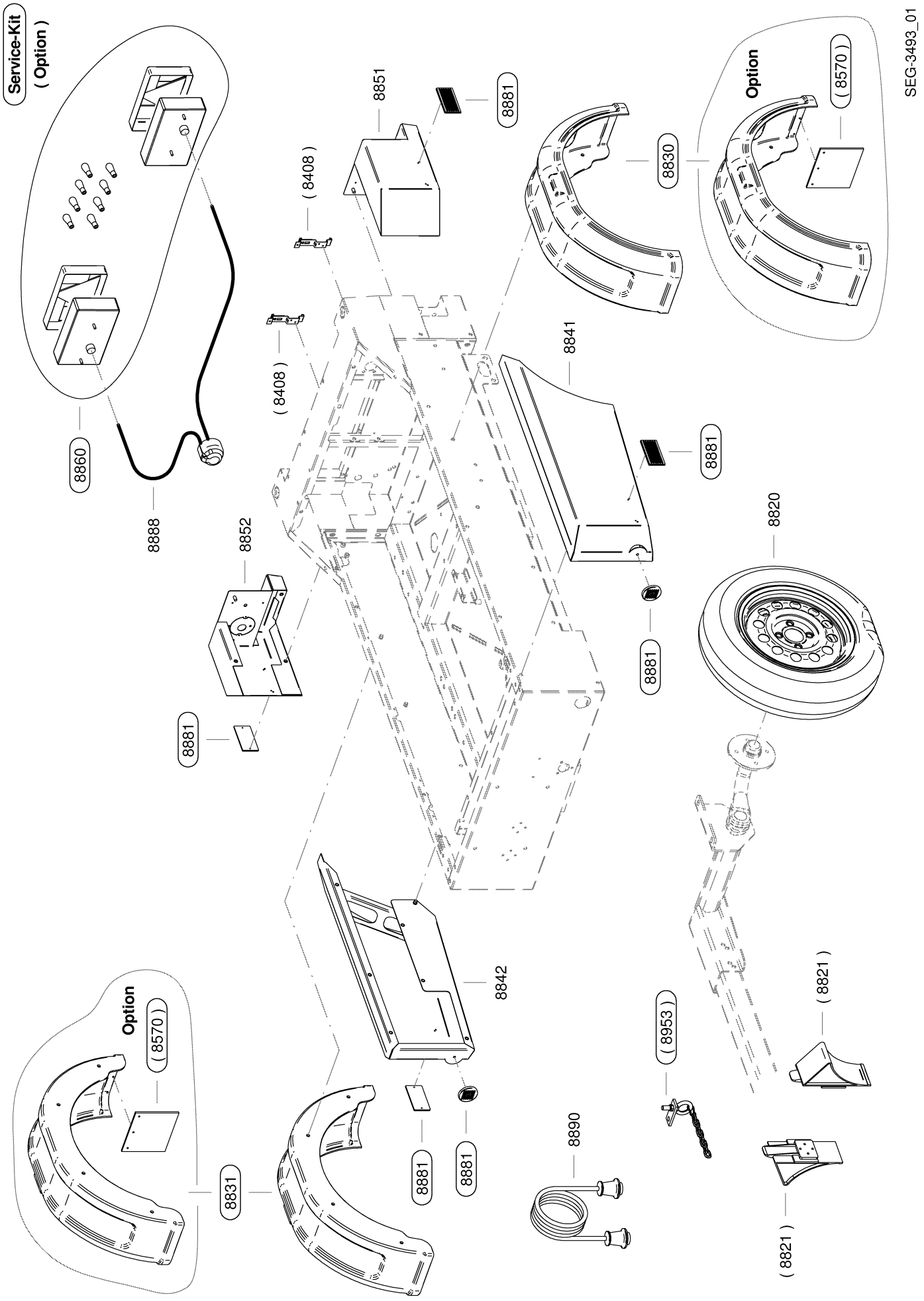
Service-Kit
(Option)
8860
8888
8851
8881
(8408)
8830
Option
(8570)
SEG-3493_01
(8408)
8841
8881
8852
8820
8881
8881
8842
Option
(8570)
8831
8881
8881
8890
(8953)
(8821)
(8821)

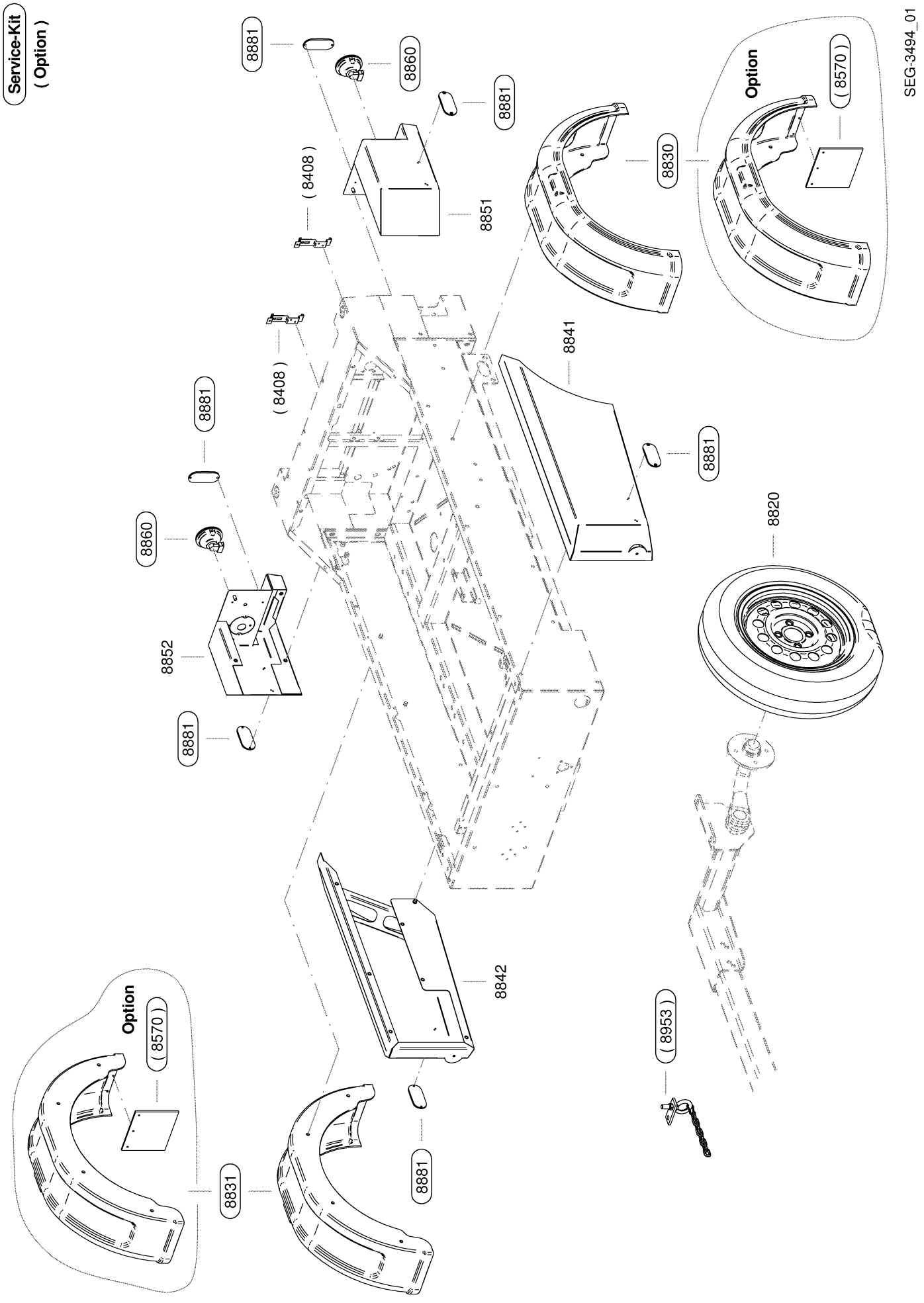
Service-Kit
(Option)
SEG-3494_01
8881
8860
8881
(8408)
8851
8830
Option
(8570)
(8408)
8841
8881
8881
8860
8820
8852
8881
8842
(8953)
Option
(8570)
8831
8881

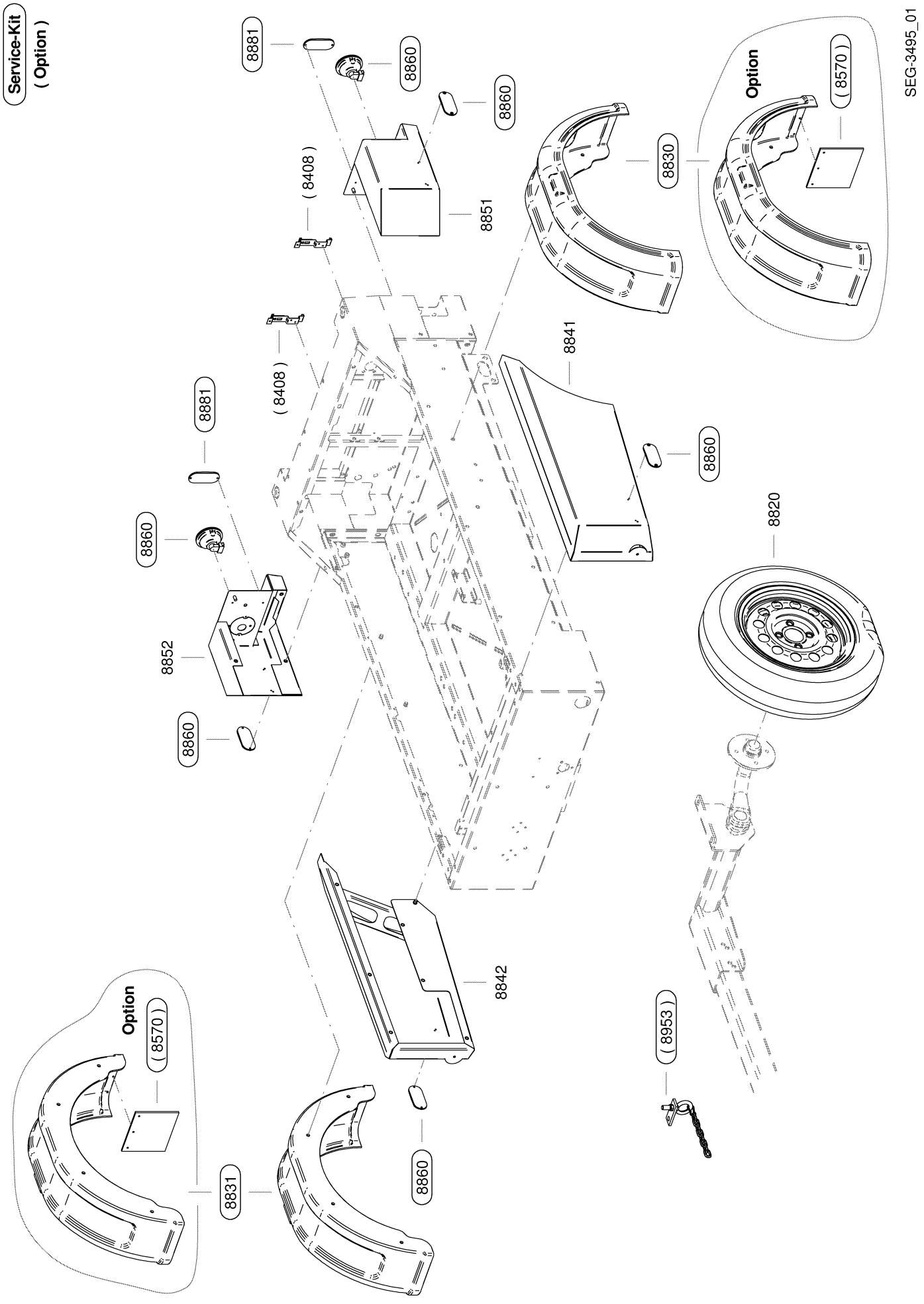
Service-Kit
(Option)
SEG-3495_01
8881
8860
8860
(8408)
8851
8830
Option
(8570)
(8408)
8841
8881
8860
8860
8820
8852
8860
8842
(8953)
Option
(8570)
8831
8860

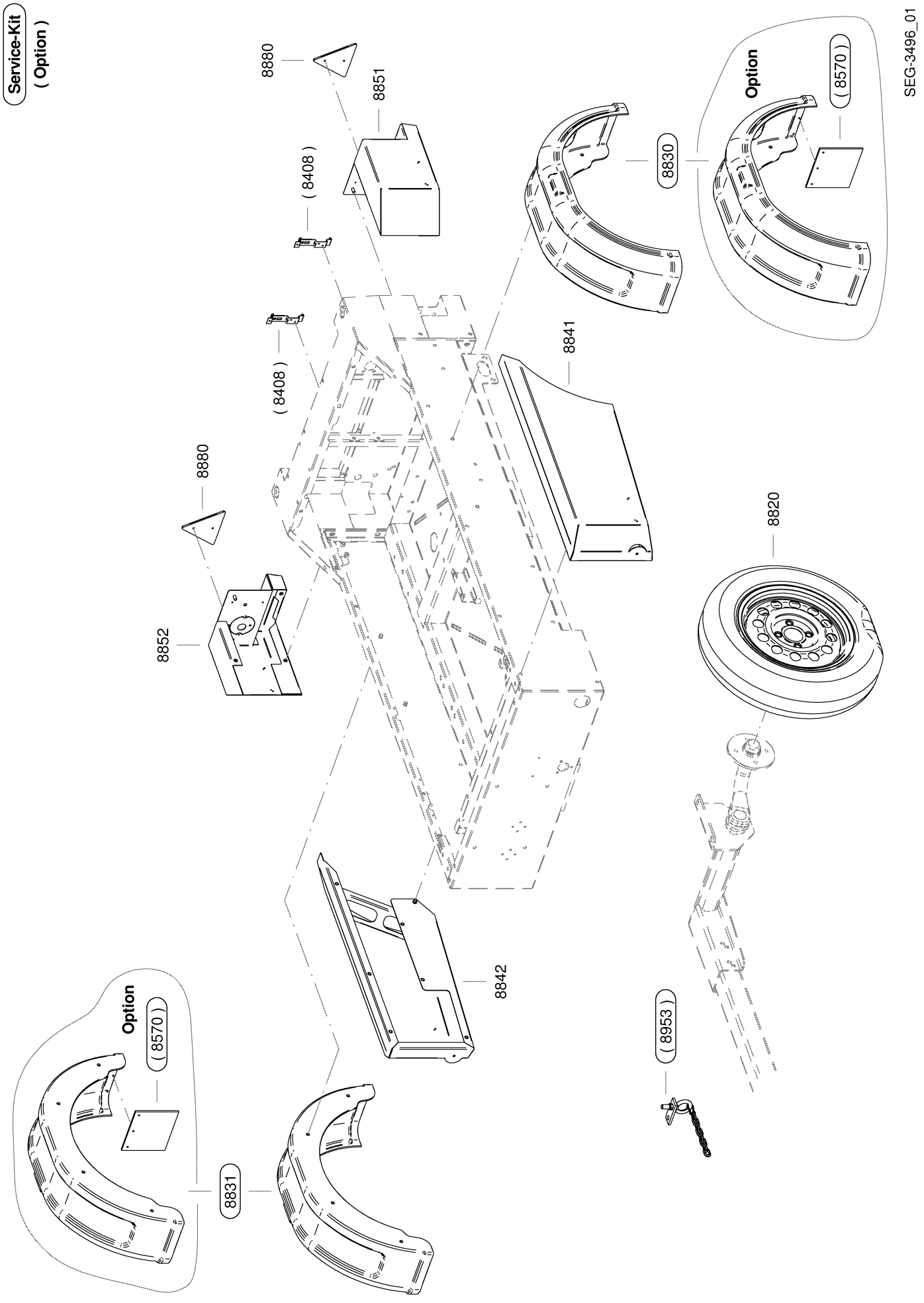
Service-Kit
(Option)
SEG-3496_01
8880
8851
(8408)
8830
Option
(8570)
(8408)
8841
8880
8820
8852
8842
(8953)
Option
(8570)
8831

Service-Kit
(Option)

SEG-3497_01

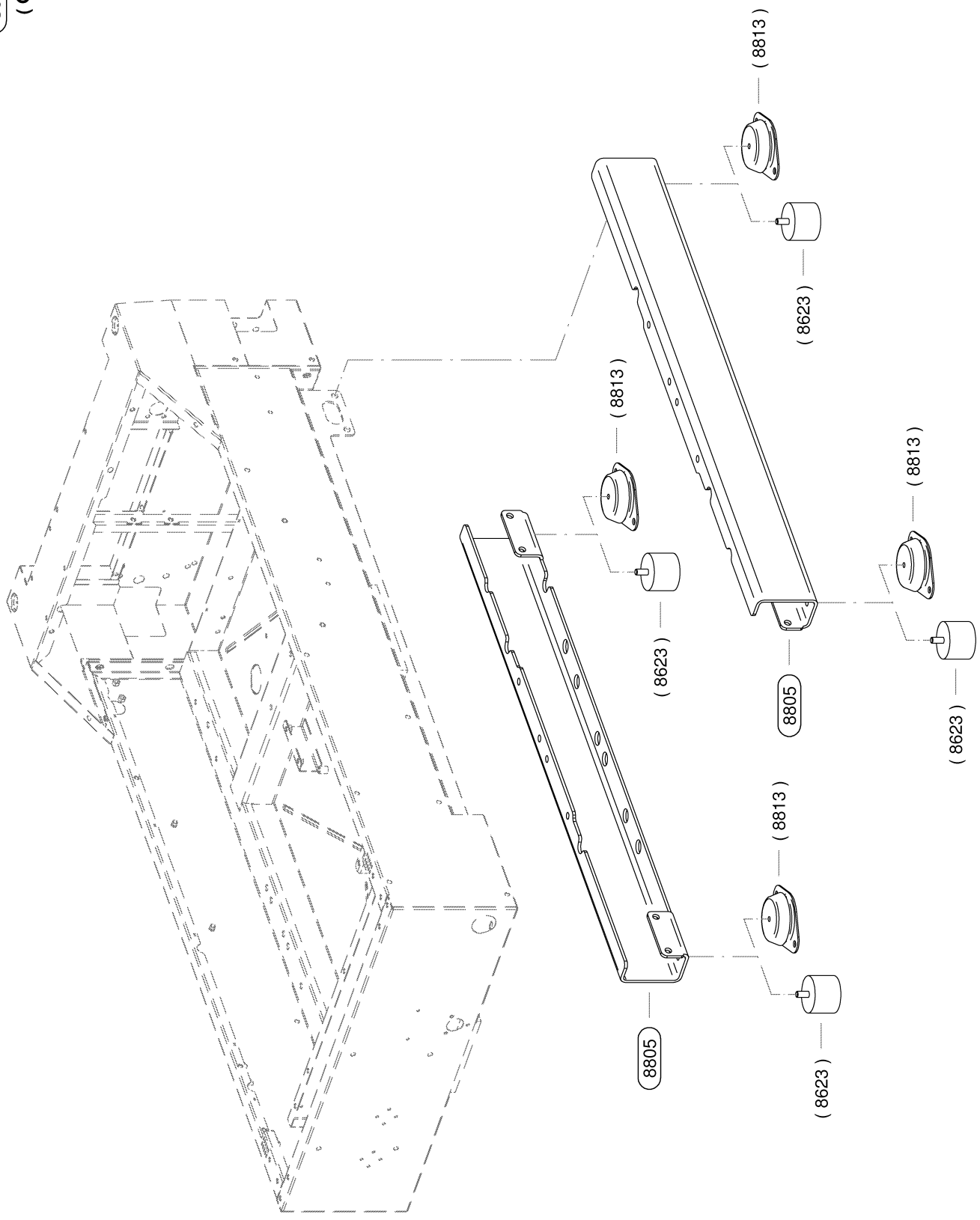

Service-Kit (Option)

SEG-3498_01

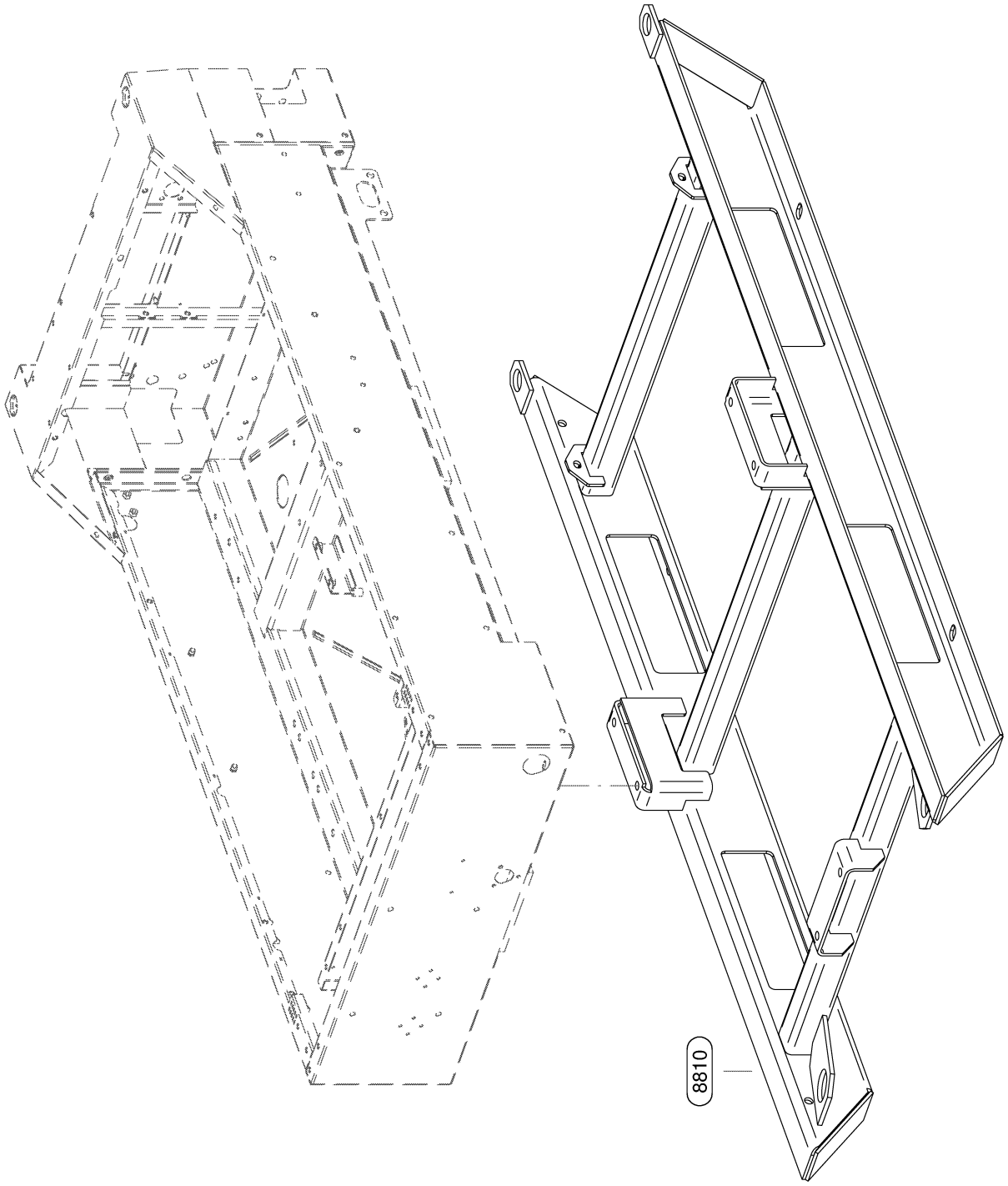

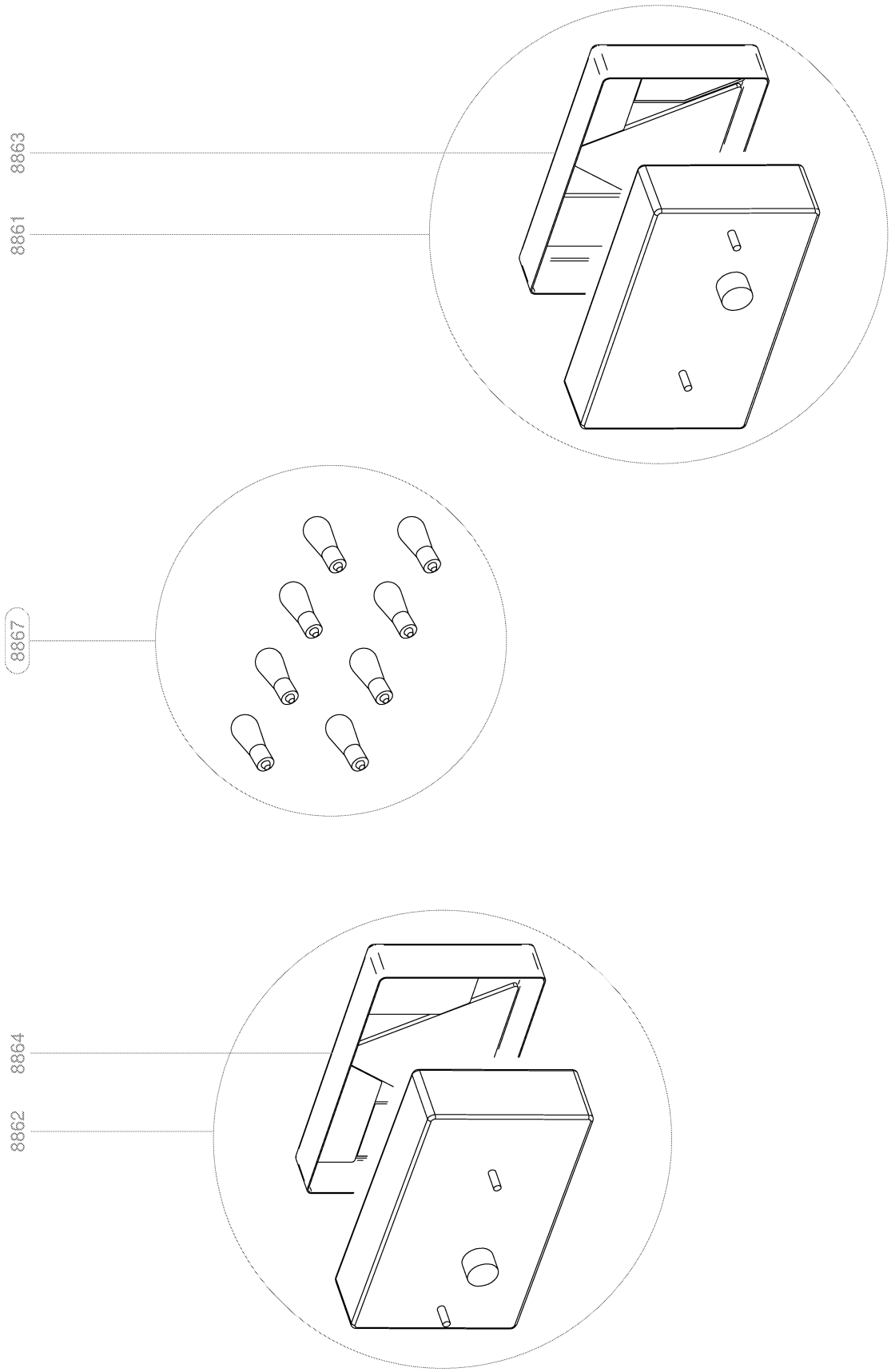

Drawings remain our exclusive property. They are entrusted only for the agreed purpose. Copies or any other reproduction, including storage, treatment and dissemination by use of electronic systems must not be made for any other than the agreed purpose. Neither originals nor reproductions may given to or made available to third parties.
Die Zeichnung bleibt unser ausschließliches Eigentum. Sie wird nur zu dem vereinbarten Zweck anvertraut und darf zu keinem anderen Zweck verwendet werden. Kopien oder sonstige Vervielfältigungen einschließlich Speicherung, Verarbeitung oder Verbreitung unter Verwendung elektronischer Systeme dürfen nur zu dem vereinbarten Zweck angefertigt werden. Weder Original noch Vervielfältigungen dürfen Dritten ausgehändigt oder in sonstiger Weise zugänglich gemacht werden.

KAESER KOMPRESSOREN

Baugruppe					
8860 - Lighting set / Beleuchtungssatz					
Zeichnungstyp	Dokument-Nr.	Original	Datum	Name	Erstellt mit
Service spare part drawing / Service Ersatzteil Zeichnung		A4	Gez. 04.05.2015	Puff1	Solid Edge
SEG-Nummer	Service-Kit (Option)	Subassembly / Untergruppe	Freigeg. 04.05.2015	Puff1	Blatt
SEG-3666_01			Status freigegeben		1 von 1

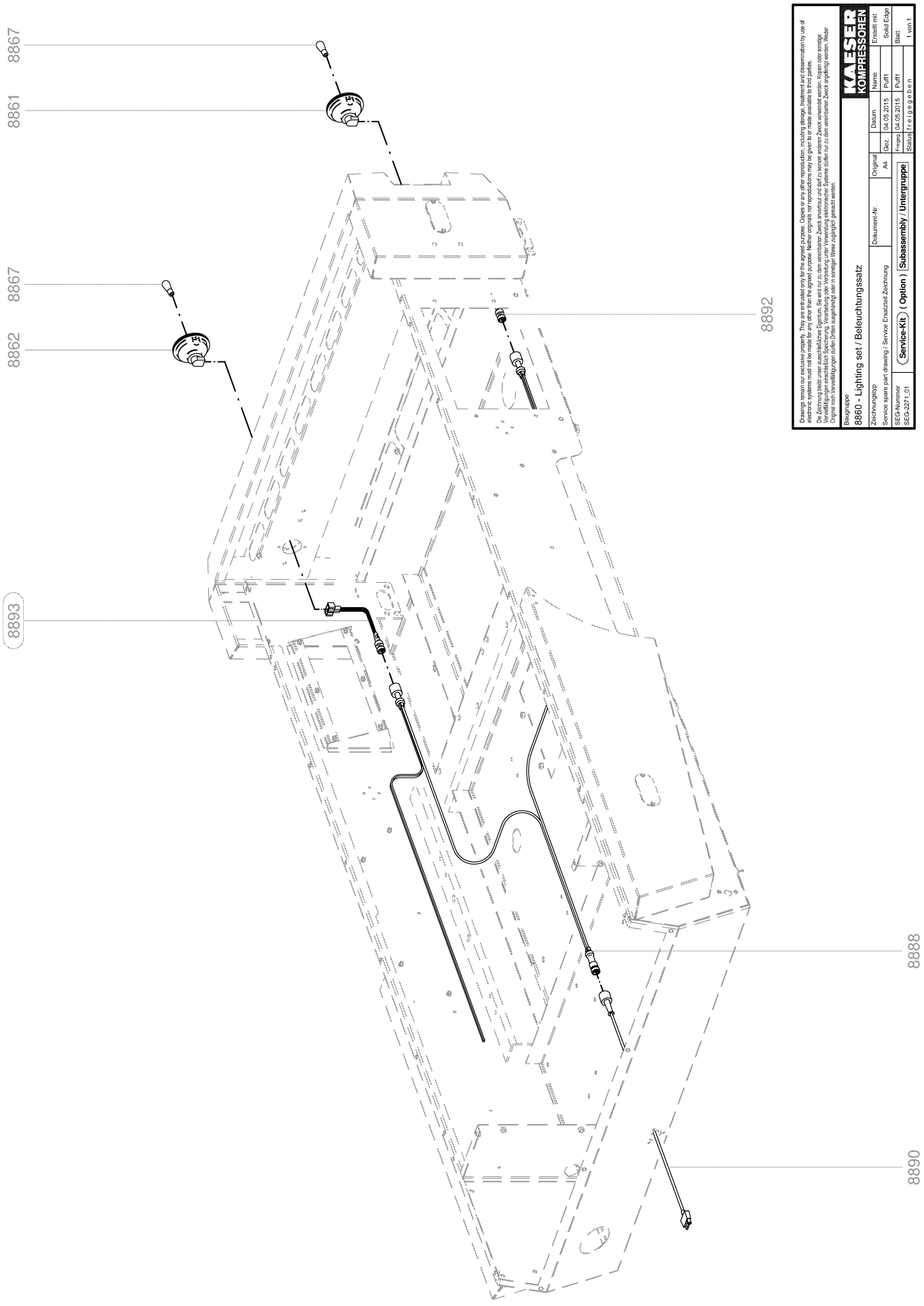
8867
8861
8867
8862
8892
8893
8888
8890
Drawings remain our exclusive property. They are entrusted only for the agreed purpose. Copies or any other reproduction, including storage, treatment and dissemination by use of electronic systems must not be made for any other than the agreed purpose. Neither originals nor reproductions may be given to or made available to third parties.
Die Zeichnung bleibt unser ausschließliches Eigentum. Sie wird nur zu dem vereinbarten Zweck anvertraut und darf zu keinem anderen Zweck verwendet werden. Kopien oder sonstige Vervielfältigungen einschließlich Speicherung, Verarbeitung unter Verwendung elektronischer Systeme dürfen nur zu dem vereinbarten Zweck angefertigt werden. Weder Original noch Vervielfältigungen dürfen Dritten ausgehändigt oder in sonstiger Weise zugänglich gemacht werden.
KAESER KOMPRESSOREN
Baugruppe
8860 - Lighting set / Beleuchtungssatz
Zeichnungstyp
Service spare part drawing / Service Ersatzteil Zeichnung
SEG-Nummer
SEG-2271_01
Service-Kit (Option) Subassembly / Untergruppe
Dokument-Nr.
Original
A4
Datum
Name
Erstellt mit
Solid Edge
Gez. 04.05.2015 Puff1
Freigab 04.05.2015 Puff1
Status freigegeben
Blatt
1 von 1

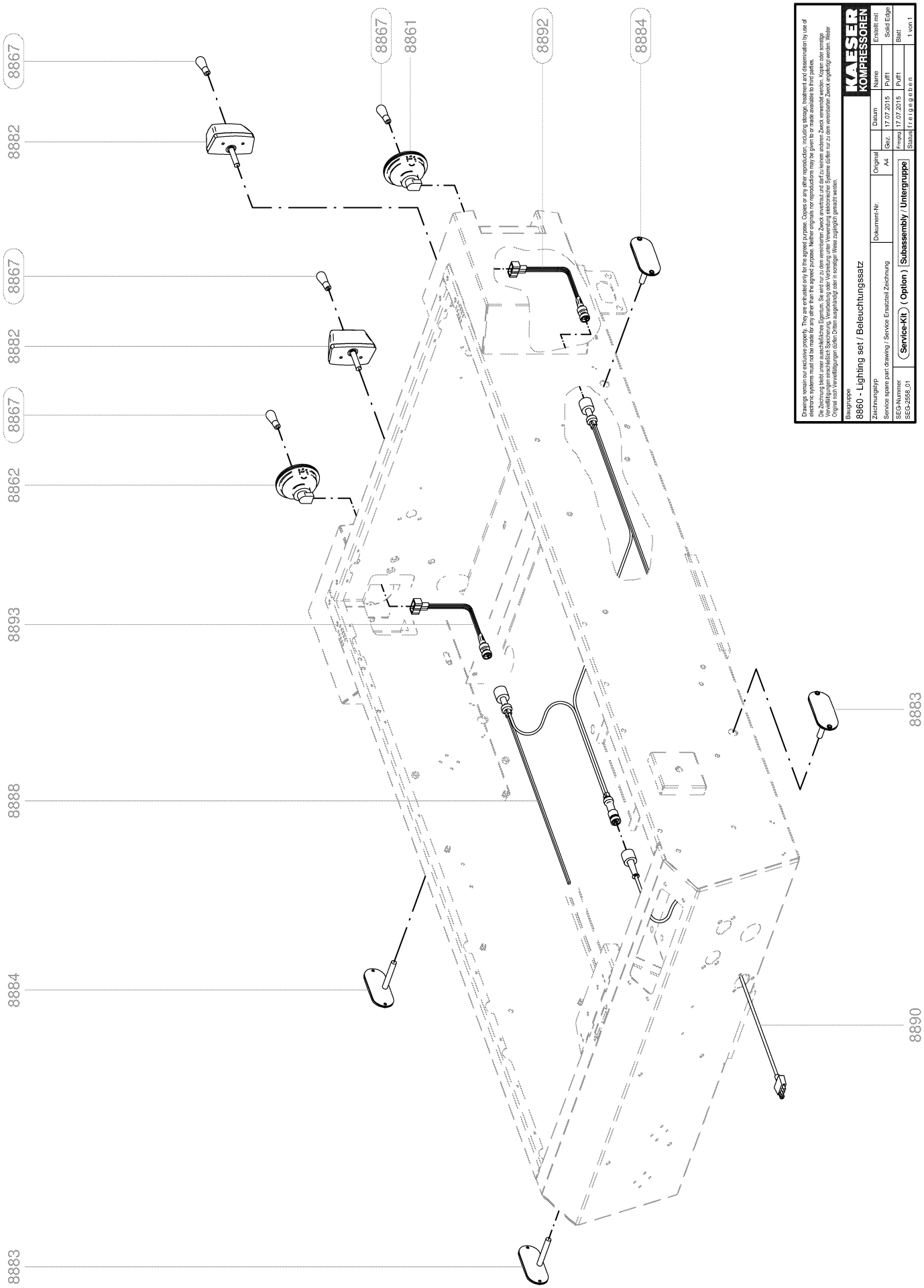
8867
8882
8867
8882
8867
8862
8893
8888
8884
8883
8867
8861
8892
8884
8883
8890
Drawings remain our exclusive property. They are entrusted only for the agreed purpose. Copies or any other reproduction, including storage, treatment and dissemination by use of electronic systems must not be made for any other than the agreed purpose. Neither originals nor reproductions may be given to or made available to third parties.
Die Zeichnung bleibt unser ausschließliches Eigentum. Sie wird nur zu dem vereinbarten Zweck anvertraut und darf zu keinem anderen Zweck verwendet werden. Kopien oder sonstige Vervielfältigungen einschließlich Speicherung, Verarbeitung oder Verbreitung unter Verwendung elektronischer Systeme dürfen nur zu dem vereinbarten Zweck angefertigt werden. Weder Original noch Vervielfältigungen dürfen Dritten ausgehändigt oder in sonstiger Weise zugänglich gemacht werden.
Baugruppe
8860 - Lighting set / Beleuchtungssatz
Zeichnungstyp
Service spare part drawing / Service Ersatzteil Zeichnung
Dokument-Nr.
Original
A4
Datum
Name
Erstellt mit
Gez.
17.07.2015
Puff1
Solid Edge
Freigeg.
17.07.2015
Puff1
Blatt
SEG-Nummer
SEG-2558_01
Service-Kit (Option)
Subassembly / Untergruppe
Status
freigegeben
1 von 1

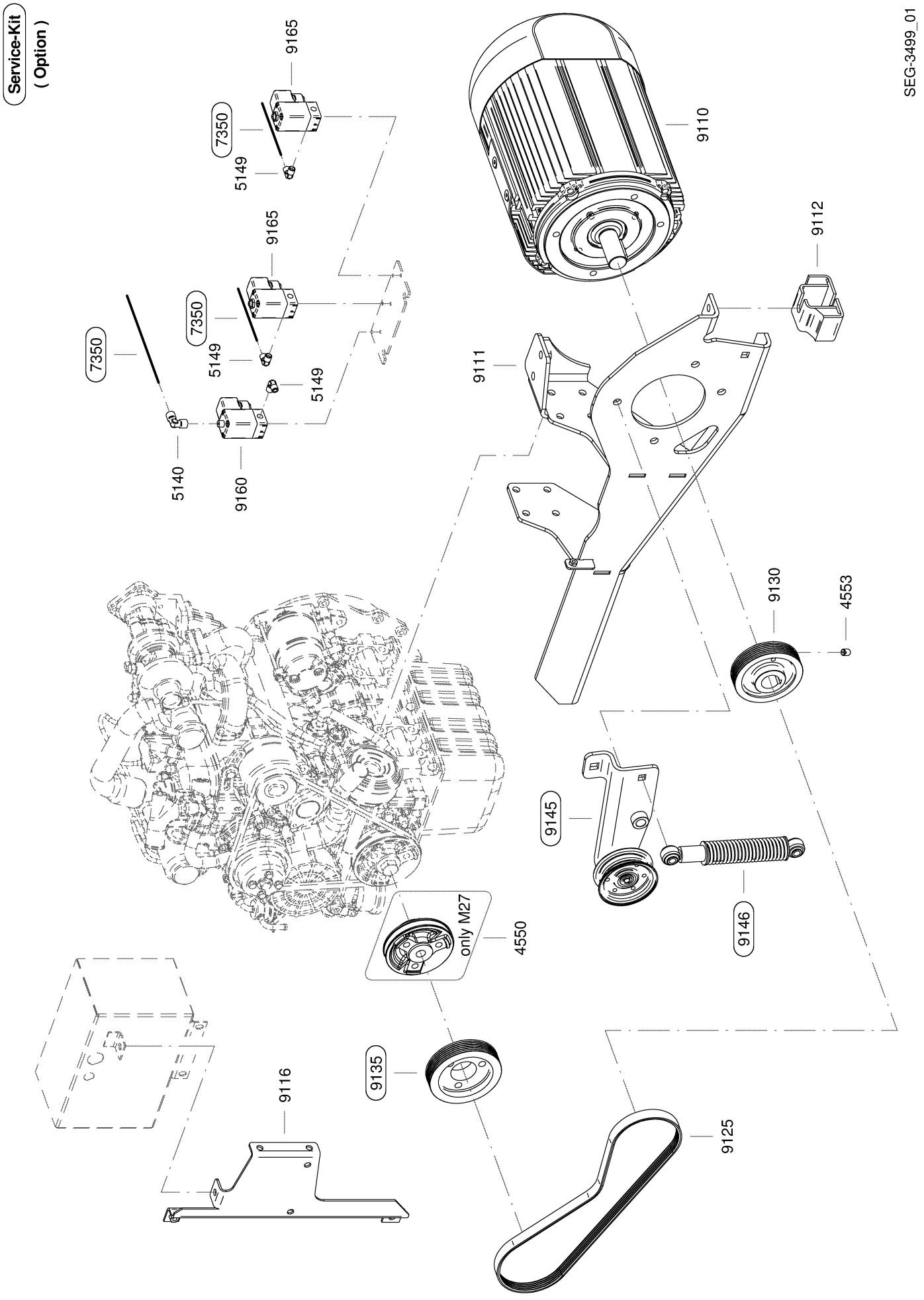
Service-Kit
(Option)
SEG-3499_01
9165
7350
5149
9110
9165
9112
7350
7350
5149
9111
5149
5140
9160
9130
4553
9145
9146
only M27
4550
9135
9116
9125

Service-Kit
(Option)

SEG-3500_01

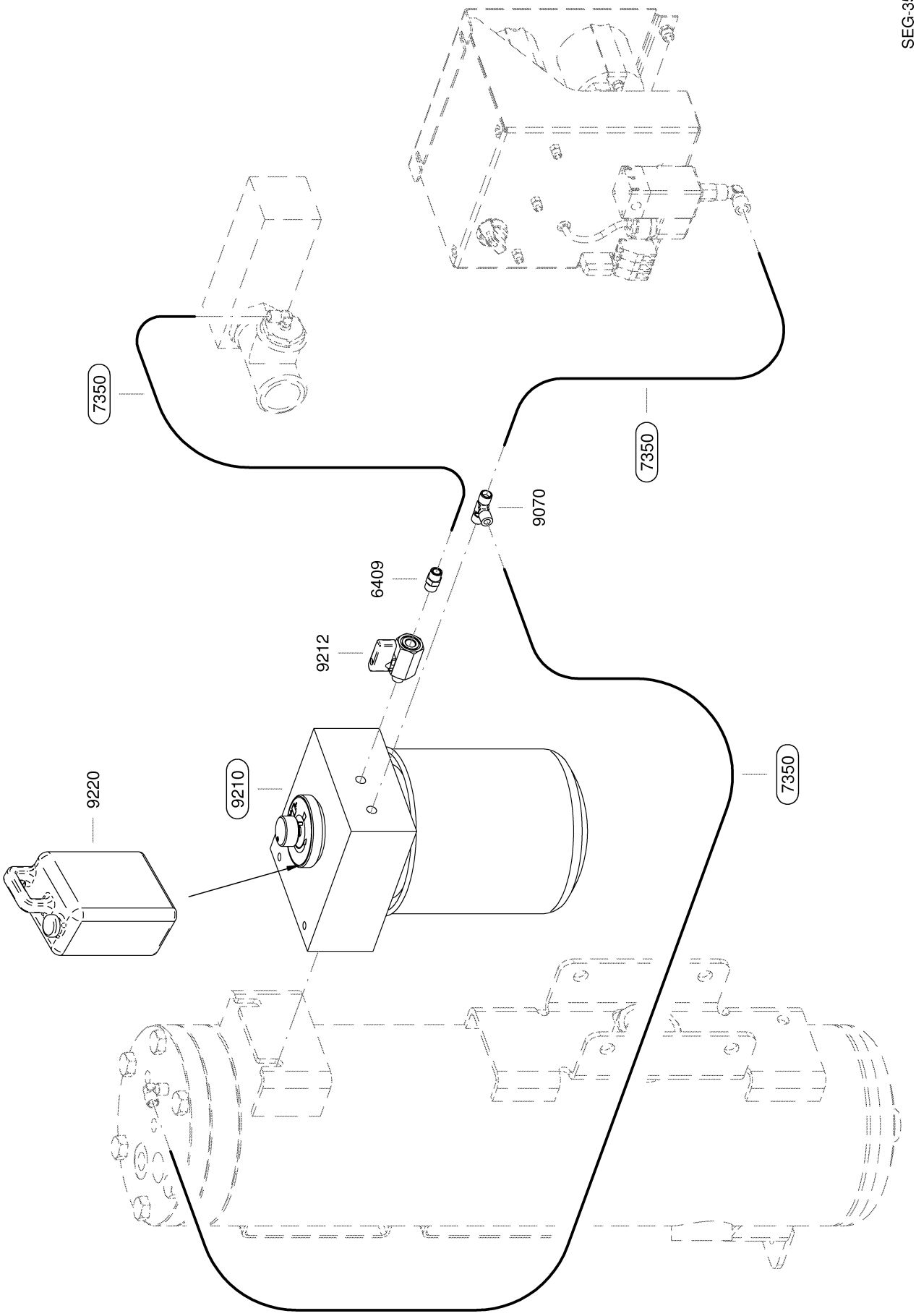

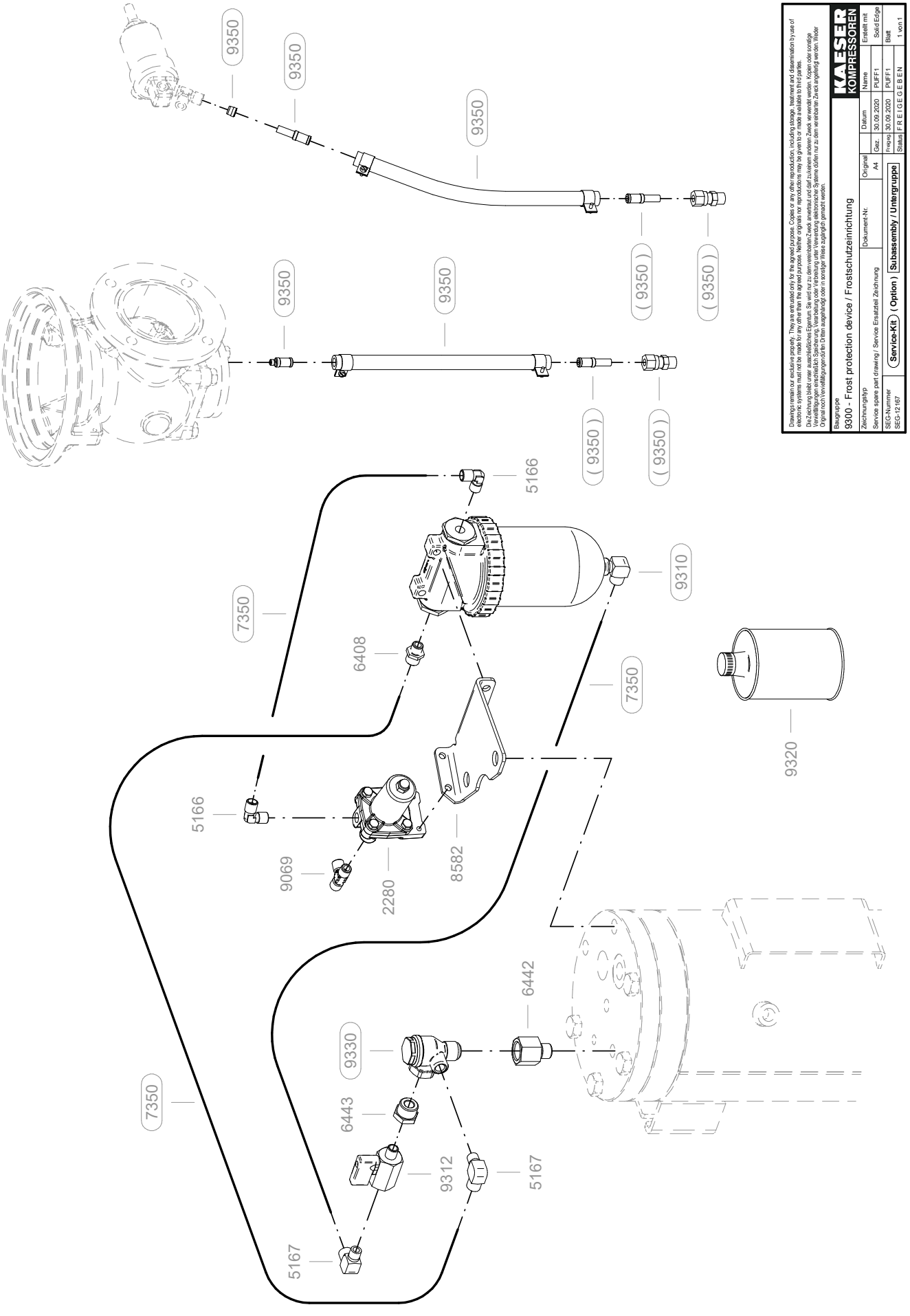

Drawings remain our exclusive property. They are entrusted only for the agreed purpose. Copies or any other reproduction, including storage, treatment and dissemination by use of electronic systems must not be made for any othre than the agreed purpose. Neither originals nor reproductions may be given to or made available to third parties.
Die Zeichnung bleibt unser ausschließliches Eigentum. Sie wird nur zu dem vereinbarten Zweck anvertraut und darf zu keinem anderen Zweck verwendet werden. Kopien oder sonstige Vervielfältigungen einschließlich Speicherung, Verarbeitung oder Verbreitung unter Verwendung elektronischer Systeme dürfen nur zu dem vereinbarten Zweck angefertigt werden. Weder Original noch Vervielfältigungen dürfen Dritten ausgehändigt oder in sonstiger Weise zugänglich gemacht werden.

KAESER KOMPRESSOREN

Baugruppe
9300 - Frost protection device / Frostschutzeinrichtung

Zeichnungstyp	Dokument-Nr.	Original		Datum	Name	Erstellt mit
Service spare part drawing / Service Ersatzteil Zeichnung		A4	Gez.	30.09.2020	PUFF1	Solid Edge
SEG-Nummer			Freigab	30.09.2020	PUFF1	Blatt
SEG-12167	Service-Kit (Option)	Subassembly / Untergruppe	Status	F R E I G E G E B E N		1 von 1

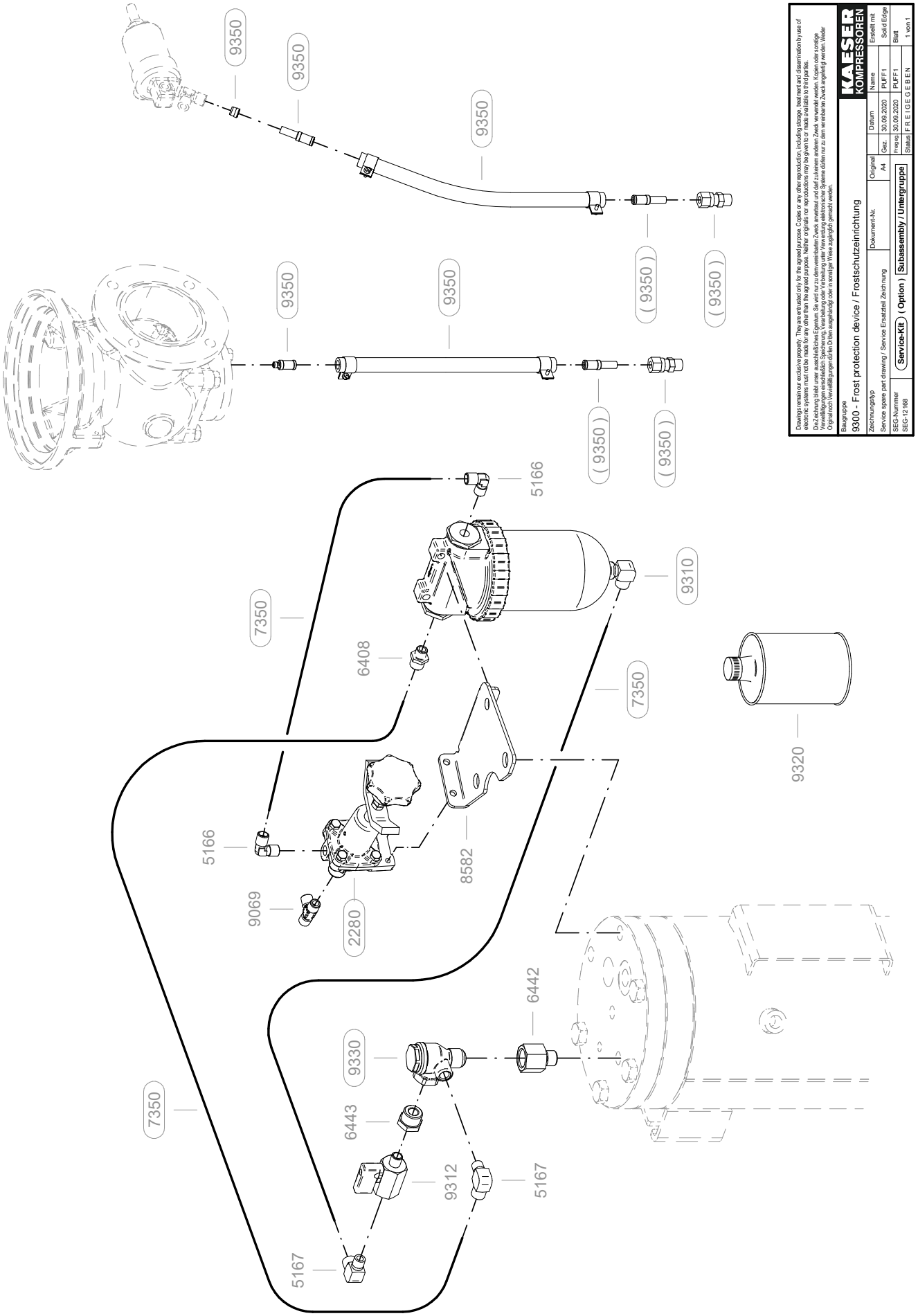
9350
9350
9350
(9350)
(9350)
9350
9350
(9350)
(9350)
5166
9310
7350
6408
7350
9320
5166
8582
9069
2280
6442
9330
7350
6443
9312
5167
5167
Drawings remain our exclusive property. They are entrusted only for the agreed purpose. Copies or any other reproduction, including storage, treatment and dissemination by use of electronic systems must not be made for any other than the agreed purpose. Neither originals nor reproductions may be given to or made available to third parties.
Die Zeichnung bleibt unser ausschließliches Eigentum. Sie wird nur zu dem vereinbarten Zweck anvertraut und darf zu keinem anderen Zweck verwendet werden. Kopien oder sonstige Vervielfältigungen einschließlich Speicherung, Verarbeitung oder Verbreitung unter Verwendung elektronischer Systeme dürfen nur zu dem vereinbarten Zweck angefertigt werden. Wieder Original noch Vervielfältigungen dürfen Dritten ausgehändigt oder in sonstiger Weise zugänglich gemacht werden.
KAESER KOMPRESSOREN
Baugruppe
9300 - Frost protection device / Frostschutzeinrichtung
Zeichnungstyp
Service spare part drawing / Service Ersatzteil Zeichnung
Dokument-Nr.
Original
A4
Datum
Name
Erstellt mit
Gez.
30.09.2020
PUFF1
Solid Edge
Freigeg.
30.09.2020
PUFF1
Blatt
SEG-Nummer
SEG-12168
Service-Kit
(Option)
Subassembly / Untergruppe
Status
F R E I G E G E B E N
1 von 1

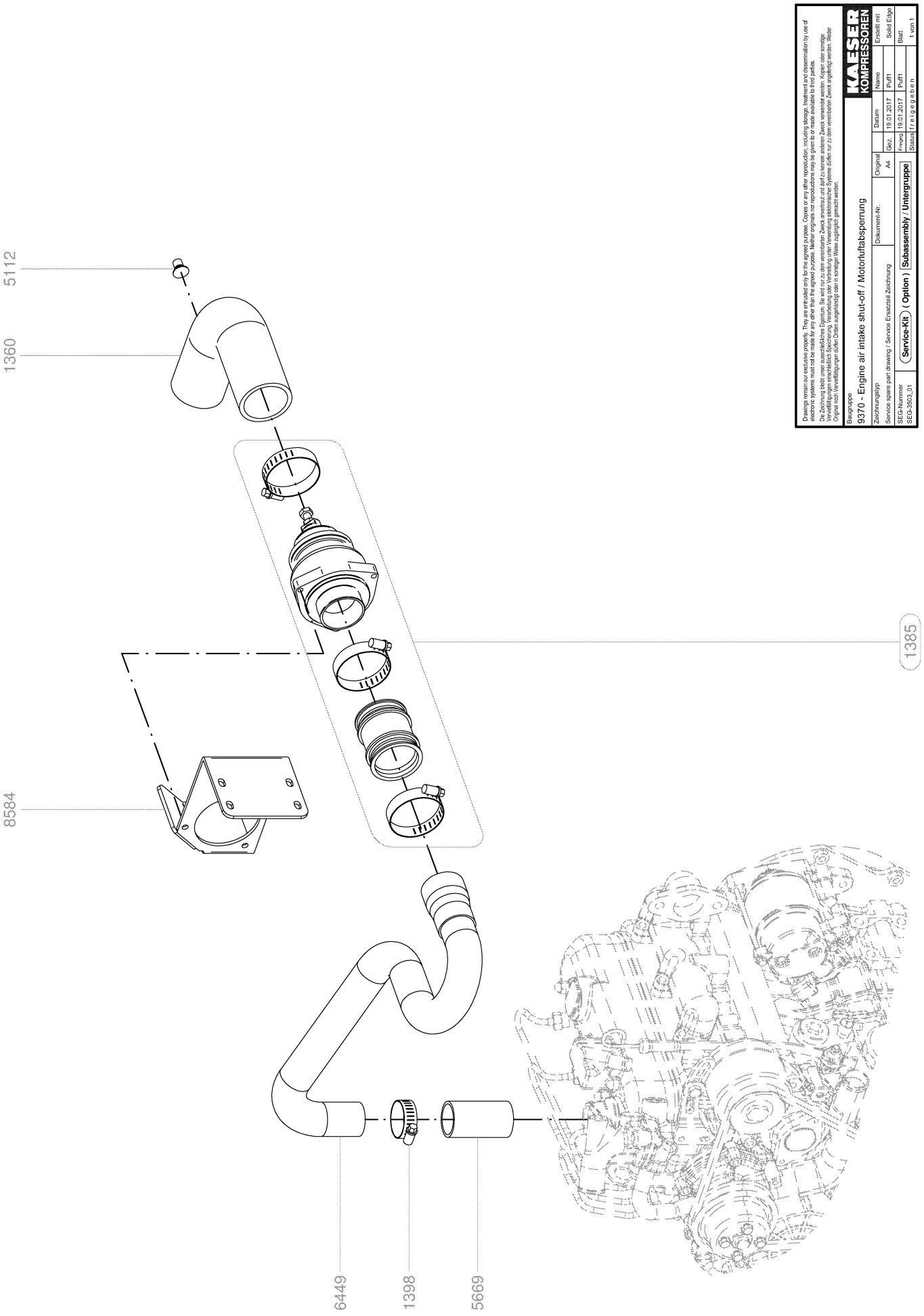

Drawings remain our exclusive property. They are entrusted only for the agreed purpose. Copies or any other reproduction, including storage, treatment and dissemination by use of electronic systems must not be made for any other than the agreed purpose. Neither originals nor reproductions may be given to or made available to third parties.
Die Zeichnung bleibt unser ausschließliches Eigentum. Sie wird nur zu dem vereinbarten Zweck anvertraut und darf zu keinem anderen Zweck verwendet werden. Kopien oder sonstige Vervielfältigungen einschließlich Speicherung, Verarbeitung oder Verbreitung unter Verwendung elektronischer Systeme dürfen nur zu dem vereinbarten Zweck angefertigt werden. Weder Originale noch Vervielfältigungen dürfen Dritten ausgehändigt oder in sonstiger Weise zugänglich gemacht werden.

KAESER KOMPRESSOREN

Baugruppe
9370 - Engine air intake shut-off / Motorluftabsperrung

Zeichnungstyp	Dokument-Nr.	Original		Datum	Name
Service spare part drawing / Service Ersatzteil Zeichnung		A4	Gez.	19.01.2017	Puff1
SEG-Nummer	Service-Kit (Option) Subassembly / Untergruppe		Freigab	19.01.2017	Puff1
SEG-3903_01			Status	f r e i g e g e b e n	

Erstellt mit: Solid Edge
Blatt: 1 von 1

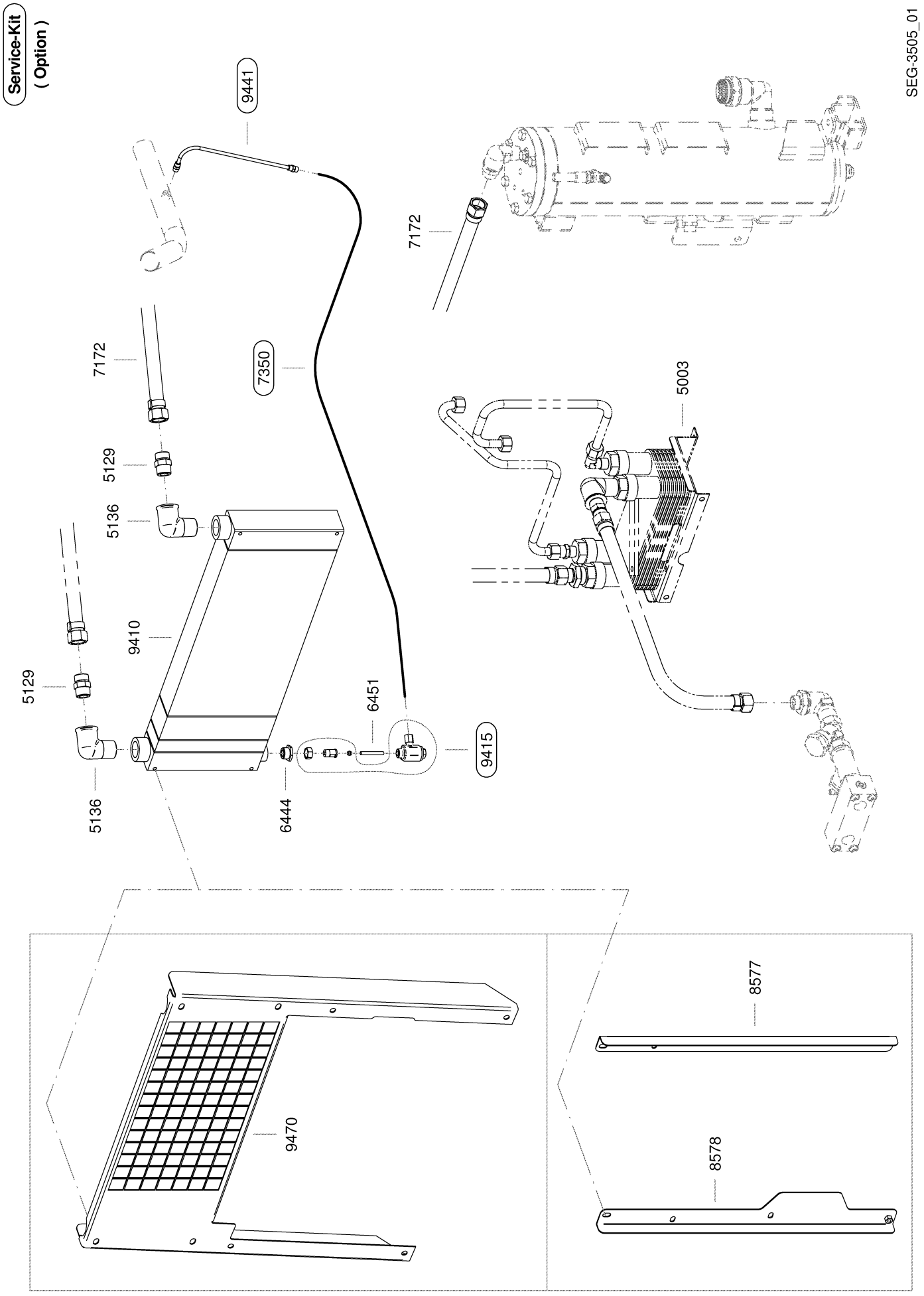
Service-Kit
(Option)
SEG-3505_01
9441
7172
7350
5003
5129
5136
9410
6451
9415
6444
9470
8577
8578

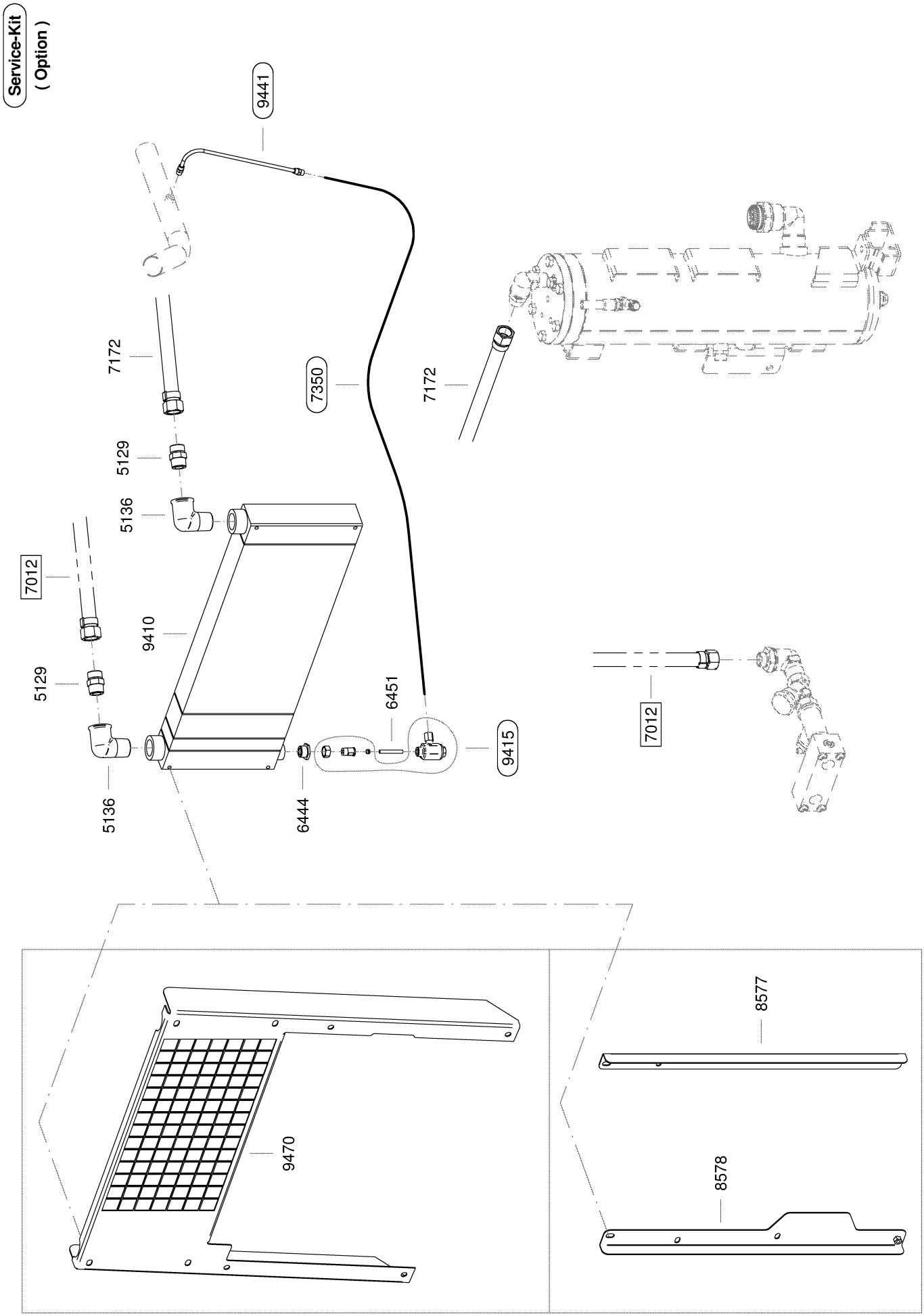
Service-Kit
(Option)
SEG-3506_01
9441
7172
7350
7172
5129
5136
7012
9410
5129
6451
9415
7012
5136
6444
9470
8577
8578

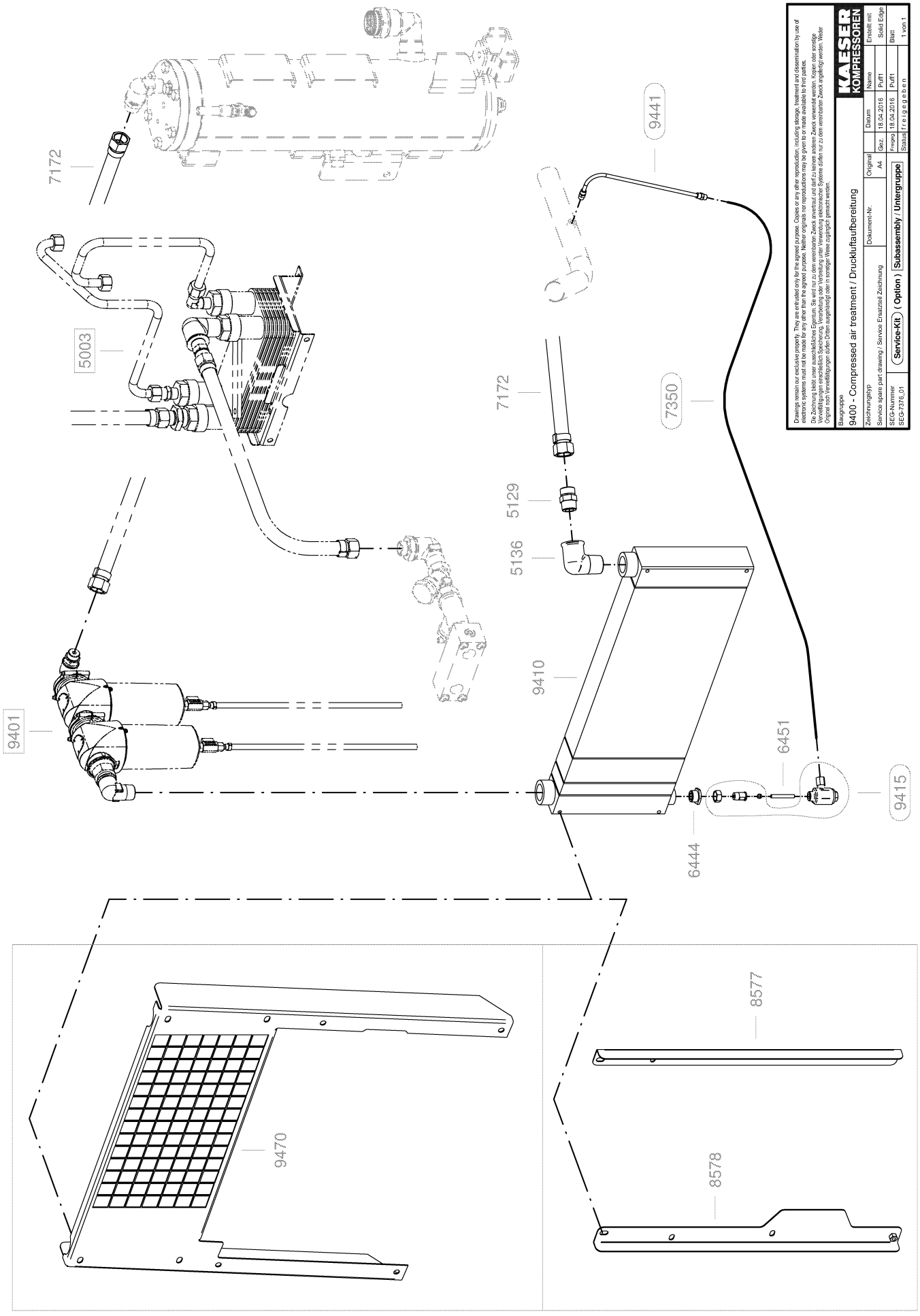
7172
5003
9441
7172
7350
5129
5136
9410
9401
6451
9415
6444
9470
8577
8578
Baugruppe
9400 - Compressed air treatment / Druckluftaufbereitung
Zeichnungstyp
Service spare part drawing / Service Ersatzteil Zeichnung
Dokument-Nr.
Original
A4
Datum
Name
Erstellt mit
Skiz.
18.04.2016
Pufft
Solid Edge
SEG-Nummer
SEG-7376_01
Service-Kit (Option) Subassembly / Untergruppe
Freigg.
18.04.2016
Pufft
Blatt
Status
freigegeben
1 von 1

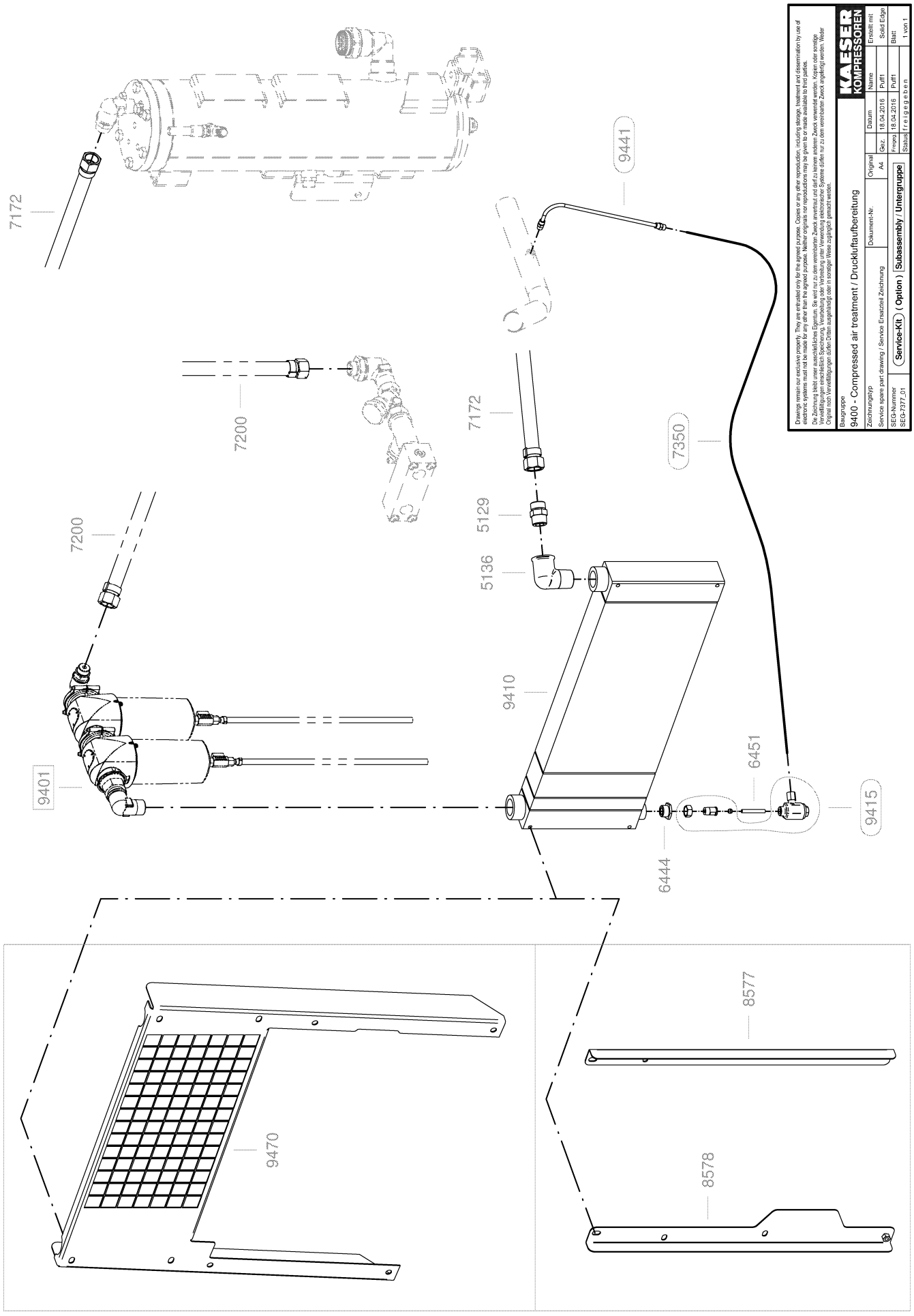
7172
9441
7200
7172
7350
5129
5136
7200
9410
6451
9401
9415
6444
9470
8577
8578
Drawings remain our exclusive property. They are entrusted only for the agreed purpose. Copies or any other reproduction, including storage, treatment and dissemination by use of electronic systems must not be made for any other than the agreed purpose. Neither originals nor reproductions may be given to or made available to third parties.
Die Zeichnung bleibt unser ausschließliches Eigentum. Sie wird nur zu dem vereinbarten Zweck anvertraut und darf zu keinem anderen Zweck verwendet werden. Kopien oder sonstige Vervielfältigungen einschließlich Speicherung, Verarbeitung unter Verwendung elektronischer Systeme dürfen nur zu dem vereinbarten Zweck angefertigt werden. Weder Original noch Vervielfältigungen dürfen Dritten ausgehändigt oder in sonstiger Weise zugänglich gemacht werden.
KAESER KOMPRESSOREN
Baugruppe
9400 - Compressed air treatment / Druckluftaufbereitung
Original
Dokument-Nr.
Datum
Name
Erstellt mit
Zeichnungstyp
A4
Gez. 18.04.2016 Pufft
Solid Edge
Service spare part drawing / Service Ersatzteil Zeichnung
SEG-Nummer
SEG-7377_01
Service-Kit (Option) Subassembly / Untergruppe
Freigegeben 18.04.2016 Pufft
Blatt
Status
1 von 1

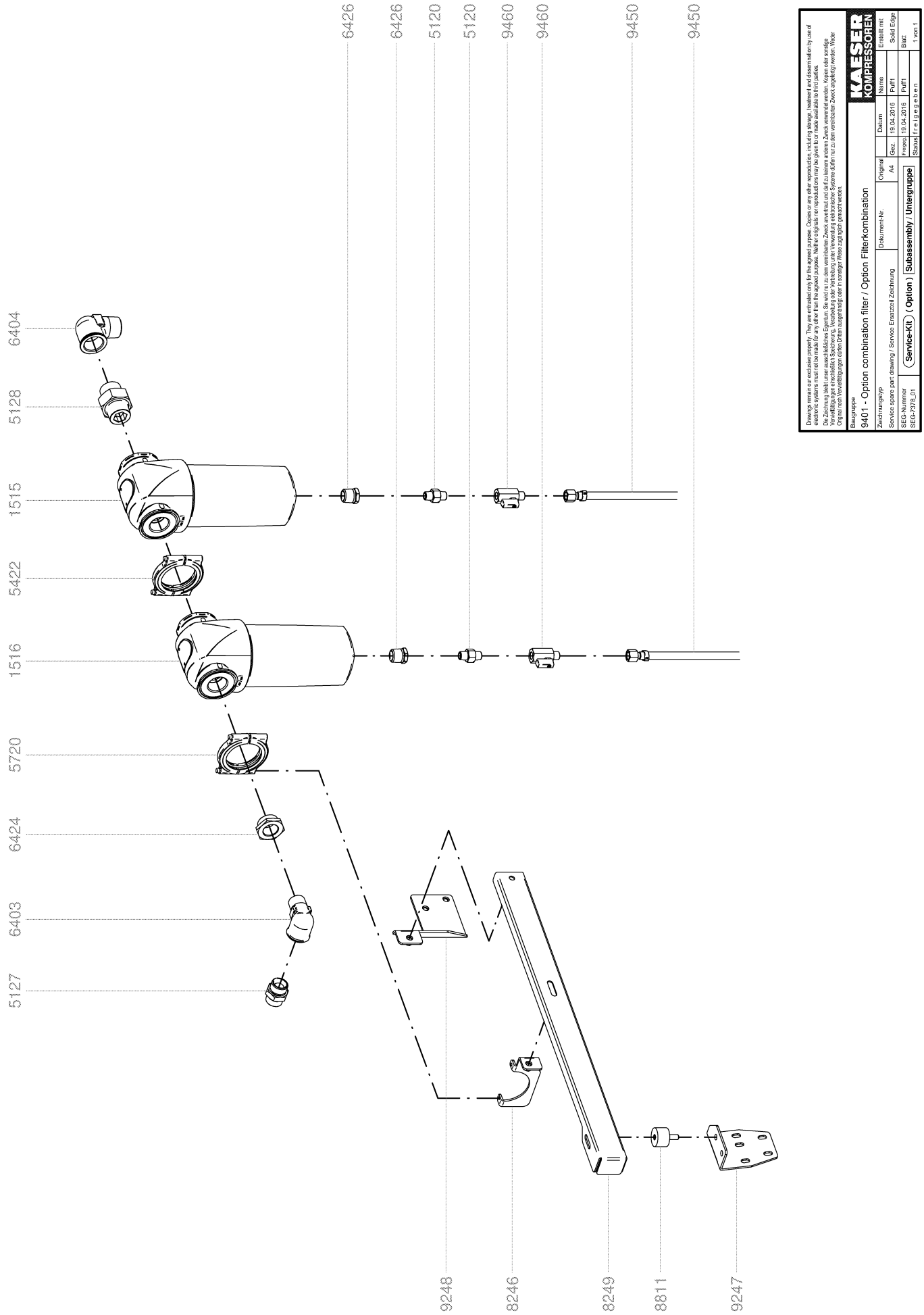
6426
6426
5120
5120
9460
9460
9450
9450
6404
5128
1515
5422
1516
5720
6424
6403
5127
9248
8246
8249
8811
9247
Drawings remain our exclusive property. They are entrusted only for the agreed purpose. Copies or any other reproduction, including storage, treatment and dissemination by use of electronic systems must not be made for any other than the agreed purpose. Neither originals nor reproductions may be given to or made available to third parties.
Die Zeichnung bleibt unser ausschließliches Eigentum. Sie wird nur zu dem vereinbarten Zweck anvertraut und darf zu keinem anderen Zweck verwendet werden. Kopien oder sonstige Vervielfältigungen einschließlich Speicherung, Verarbeitung oder Verbreitung unter Verwendung elektronischer Systeme dürfen nur zu dem vereinbarten Zweck angefertigt werden. Weder Original noch Vervielfältigungen dürfen Dritten ausgehändigt oder in sonstiger Weise zugänglich gemacht werden.
Baugruppe
9401 - Option combination filter / Option Filterkombination
Zeichnungstyp
Service spare part drawing / Service Ersatzteil Zeichnung
Dokument-Nr.
Original
A4
Datum
Name
Erstellt mit
Gez.
19.04.2016
Puff1
Solid Edge
Freigeg.
19.04.2016
Puff1
Blatt
SEG-Nummer
SEG-7378_01
Service-Kit (Option)
Subassembly / Untergruppe
Status
f r e i g e g e b e n
1 von 1

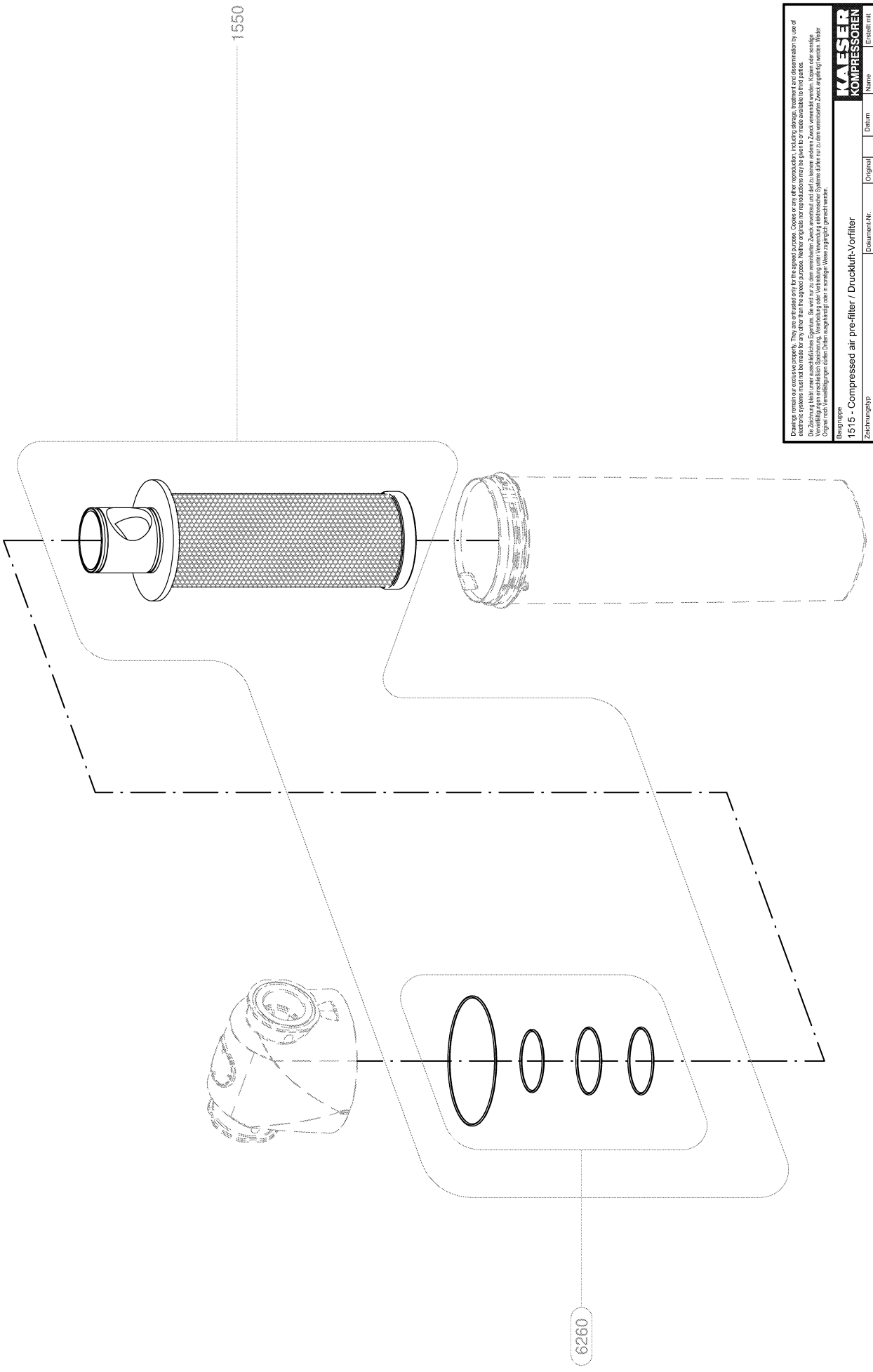

Drawings remain our exclusive property. They are entrusted only for the agreed purpose. Copies or any other reproduction, including storage, treatment and dissemination by use of electronic systems must not be made for any other than the agreed purpose. Neither originals nor reproductions may be given to or made available to third parties.
Die Zeichnung bleibt unser ausschließliches Eigentum. Sie wird nur zu dem vereinbarten Zweck anvertraut und darf zu keinem anderen Zweck verwendet werden. Kopien oder sonstige Vervielfältigungen einschließlich Speicherung, Verarbeitung oder Verbreitung unter Verwendung elektronischer Systeme dürfen nur zu dem vereinbarten Zweck angefertigt werden. Weder Original noch Vervielfältigungen dürfen Dritten ausgehändigt oder in sonstiger Weise zugänglich gemacht werden.

KAESER KOMPRESSOREN

Baugruppe
1515 - Compressed air pre-filter / Druckluft-Vorfilter

Zeichnungstyp	Dokument-Nr.	Original	Datum	Name	Erstellt mit
Service spare part drawing / Service Ersatzteil Zeichnung		A4	Gez. 19.04.2016	Puff1	Solid Edge
SEG-Nummer			Freigab 19.04.2016	Puff1	Blatt
SEG-7380_01	Service-Kit (Option) Subassembly / Untergruppe		Status freigegeben		1 von 1

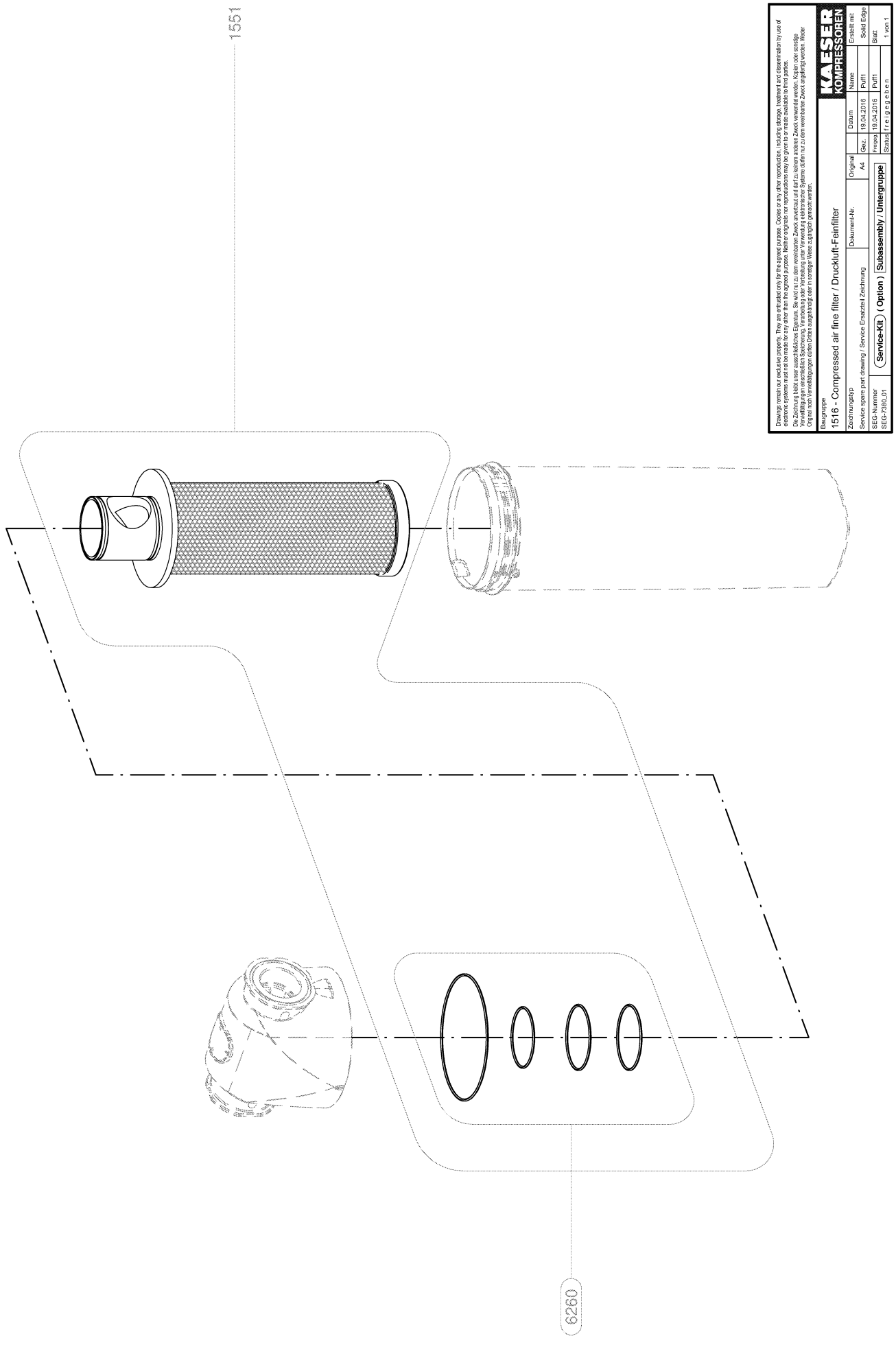
1551
6260
Drawings remain our exclusive property. They are entrusted only for the agreed purpose. Copies or any other reproduction, including storage, treatment and dissemination by use of electronic systems must not be made for any other than the agreed purpose. Neither originals nor reproductions may be given to or made available to third parties.
Die Zeichnung bleibt unser ausschließliches Eigentum. Sie wird nur zu dem vereinbarten Zweck anvertraut und darf zu keinem anderen Zweck verwendet werden. Kopien oder sonstige Vervielfältigungen einschließlich Speicherung, Verarbeitung oder Verbreitung unter Verwendung elektronischer Systeme dürfen nur zu dem vereinbarten Zweck angefertigt werden. Weder Original noch Vervielfältigungen dürfen Dritten ausgehändigt oder in sonstiger Weise zugänglich gemacht werden.
Baugruppe
1516 - Compressed air fine filter / Druckluft-Feinfilter
Zeichnungstyp
Service spare part drawing / Service Ersatzteil Zeichnung
Dokument-Nr.
Original
A4
Datum
Name
Erstellt mit
Gez.
19.04.2016
Puff1
Solid Edge
Freigeg.
19.04.2016
Puff1
Blatt
SEG-Nummer
SEG-7380_01
Service-Kit
(Option)
Subassembly / Untergruppe
Status
f r e i g e g e b e n
1 von 1

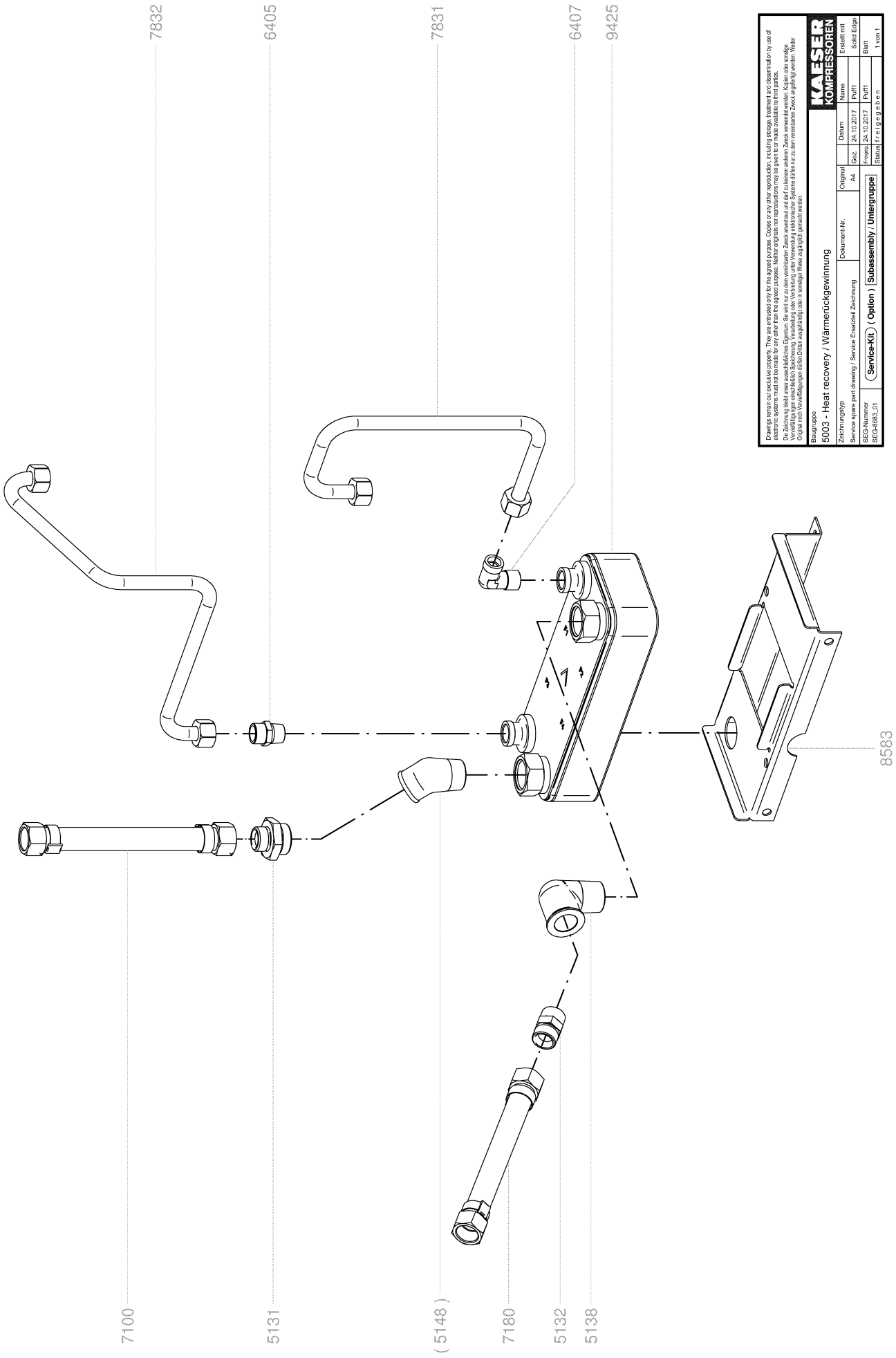
7832
6405
7831
6407
9425
8583
7100
5131
(5148)
7180
5132
5138
Drawings remain our exclusive property. They are entrusted only for the agreed purpose. Copies or any other reproduction, including storage, treatment and dissemination by use of electronic systems must not be made for any other than the agreed purpose. Neither originals nor reproductions may be given to or made available to third parties.
Die Zeichnung bleibt unser ausschließliches Eigentum. Sie wird nur zu dem vereinbarten Zweck anvertraut und darf zu keinem anderen Zweck verwendet werden. Kopien oder sonstige Vervielfältigungen einschließlich Speicherung, Verarbeitung unter Verwendung elektronischer Systeme dürfen nur zu dem vereinbarten Zweck angefertigt werden. Weder Original noch Vervielfältigungen dürfen Dritten ausgehändigt oder in sonstiger Weise zugänglich gemacht werden.
KAESER KOMPRESSOREN
Baugruppe
5003 - Heat recovery / Wärmerückgewinnung
Zeichnungstyp
Service spare part drawing / Service Ersatzteil Zeichnung
SEG-Nummer
SEG-8683_01
Service-Kit (Option) Subassembly / Untergruppe
Dokument-Nr.
Original
A4
Datum
Name
Erstellt mit
Gez. 24.10.2017 Puffl Solid Edge
Freigb. 24.10.2017 Puffl
Blatt
Status freigegeben
1 von 1

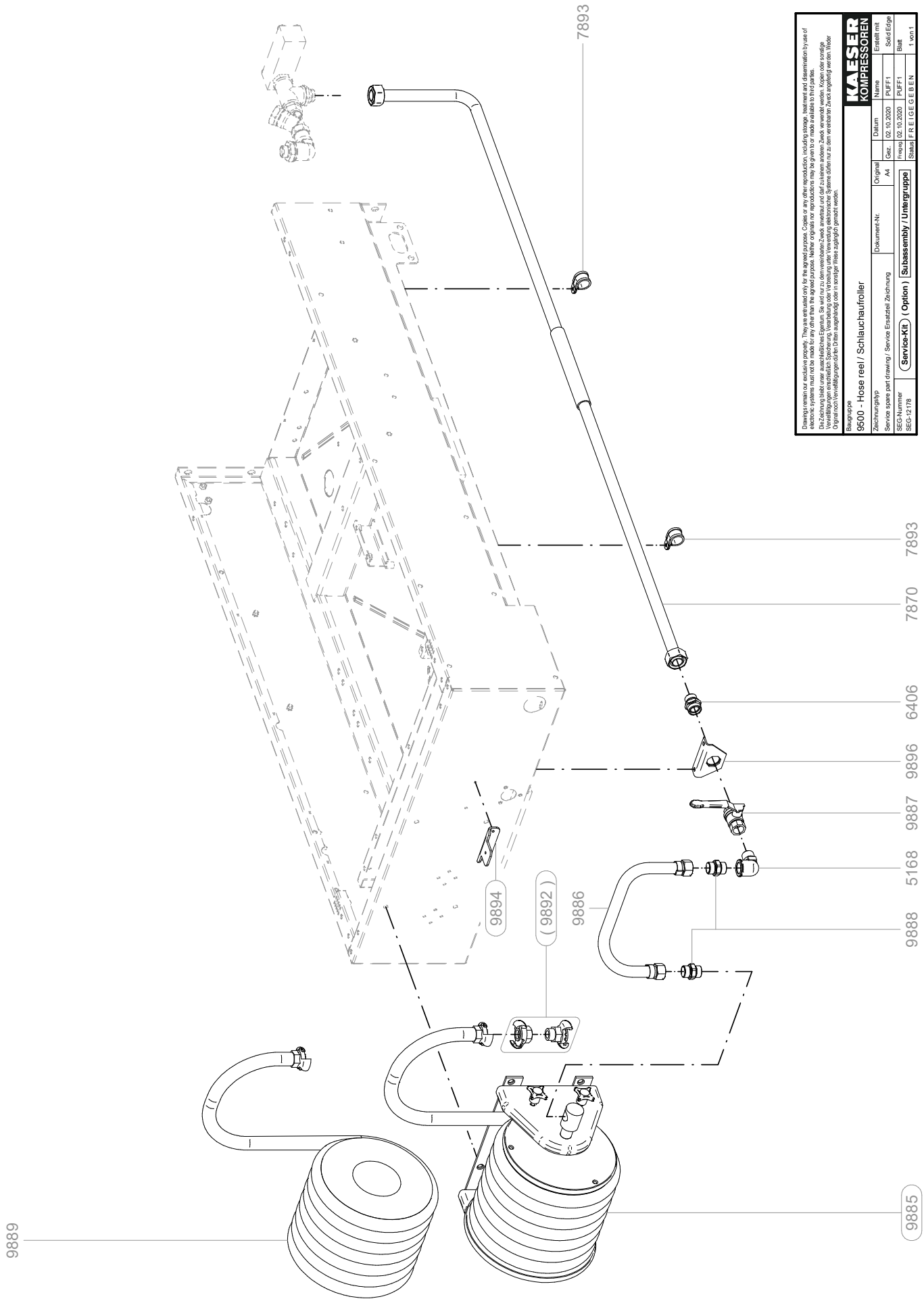
7893
7893
7870
6406
9896
9887
5168
9888
9886
9894
(9892)
9885
9889
Drawing remain our exclusive property. They are entrusted only for the agreed purpose. Copies or any other reproduction, including storage, treatment and dissemination by use of electronic systems must not be made for any other than the agreed purpose. Neither original nor reproductions may be given to or made available to third parties.
Die Zeichnung bleibt unser ausschließliches Eigentum. Sie wird nur zu dem vereinbarten Zweck anvertraut und darf zu keinem anderen Zweck verwendet werden. Kopien oder sonstige Vervielfältigungen einschließlich Speicherung, Verarbeitung oder Verbreitung unter Verwendung elektronischer Systeme dürfen nur zu dem vereinbarten Zweck angefertigt werden. Wieder Original noch Vervielfältigungen dürfen Dritten ausgehändigt oder in sonstiger Weise zugänglich gemacht werden.
Baugruppe
9500 - Hose reel / Schlauchaufroller
Zeichnungstyp
Service spare part drawing / Service Ersatzteil Zeichnung
Dokument-Nr.
Original
A4
Datum
Name
Erstellt mit
Gez.
02.10.2020
PUFF1
Solid Edge
Freigeg.
02.10.2020
PUFF1
Blatt
Status
F R E I G E G E B E N
1 von 1
SEG-Nummer
SEG-12178
Service-Kit
(Option)
Subassembly / Untergruppe
KAESER KOMPRESSOREN

12 Decommissioning, Storage and Transport

12.1 Decommissioning

Decommissioning is necessary, for example, under the following circumstances:

- The machine is temporarily not needed
- The machine will not be needed for a considerable time.
- The machine is to be scrapped.

Precondition The machine is shut down.
Machine dry and cool.

1. Carry out the following decommissioning procedures.
2. Place a notice on the instrument panel describing the decommissioning procedures carried out.

12.1.1 Temporary decommissioning

Decommissioning for about 4 months.

Material Plastic sheeting
Moisture-resistant adhesive tape

1. Disconnect the battery (the negative terminal first and then the plus terminal).
2. Close off the following openings with plastic foil and moisture-resistant adhesive tape.
   - Engine air inlet
   - Compressor air inlet
   - Exhaust silencer
3. Attach the following notice on the instrument panel showing the decommissioning measures taken.

Attention!

1. The machine is temporarily decommissioned.

2. The following machine openings have been covered:

- Engine air inlet
- Compressor air inlet
- Exhaust silencer

3. Recommission according to service manual.

Date / signature

Tab. 101 "Temporarily decommissioned" information notice

Decommissioning of the compressor for several weeks during severe frost

1. **NOTICE** *Danger of batteries freezing!*
   Discharged batteries are subject to frost damage and can freeze at 14°F.
   - ➢ *Store batteries in a frost-free place.*
   - ➢ *Store batteries preferably fully charged.*

2. Remove the battery (batteries) and store in a frost-free room.
3. Make sure batteries are fully charged.

12.1.2 Long-term decommissioning/storage

Decommissioning the machine for periods of longer than 5 months or permanently.

Material
Preservative
Desiccant
Plastic sheeting
Moisture-resistant adhesive tape

➢ The following measures must be taken for longer periods of decommissioning and storage:

Long-term decommissioning and storage tasks	See chapter	Confirmed?
➢ Check the drive engine coolant.	10.3.1	
➢ Arrange for preservation measures to be carried out on the drive engine by a specialist workshop.	–	
➢ Disconnect the battery/batteries (negative terminal first, then positive terminal) and store in a frost-free room.	–	
➢ Check the battery fluid level.	10.8.1	
➢ Check the battery charge monthly and recharge if necessary to prevent the battery fluid from freezing.	–	
➢ Clean the battery terminals and coat with acid-resistant grease.	–	
➢ Close the compressed air discharge valves.	–	
➢ Cover the following openings using plastic sheeting and moisture-proof adhesive tape: ■ Engine air intake ■ Compressor air intake ■ Exhaust silencer	–	
➢ Clean the bodywork and treat with preservative.	–	
➢ Attach a notice to the control panel indicating the decommissioning measures taken.	–	

Tab. 102 Checklist for long-term decommissioning/storage

➢ Attach the following notice to the control panel, indicating the decommissioning measures taken:

Attention!

1. This machine has been decommissioned.
2. Preservation measures have been carried out on the drive engine.
3. When recommissioning:

- Carry out measures for recommissioning following long-term decommissioning/storage.
- Recommission as per the instructions in the operating manual.

Date/signed:

Tab. 103 Notice text: “Long-term decommissioning/storage”

➢ Store the machine in a dry place not subject to temperature fluctuations.

12.2 Transportation

Depending on the options fitted, the following possibilities are available for moving the machine locally or transporting it as a load:

- Transport by crane.
  - Transport by crane is permitted for all machines fitted with a lifting eye.
- Transport by forklift truck.
  - Transport by forklift is permitted exclusively for stationary machines fitted with a skid frame (Option rw).
- Transporting the machine as load.

Instructions for transporting the machine as a trailer on public roads can be found in the operating manual for the chassis.

Precondition The machine is shut down.

The machine is secured against unintentional activation.

The machine is fully vented, the pressure gauge reads 0 psig!

The machine has cooled down.

All compressed air consumers are disconnected.

All connecting lines and hoses have been disconnected and removed.

Any loose or movable parts that could fall off during transportation have been removed or secured.

➢ Follow all instructions carefully.

12.2.1 Safety

Only allow transport by authorized personnel who are trained in the safe handling of motor vehicles and the transportation of goods.

➢ Ensure that the danger area is clear of personnel.

12.2.2 Transporting the machine by crane

Use only the manufacturer-designated lifting eye as the attachment point for suspended transport!

The lifting eye is located beneath a lift-up cover plate in the center of the enclosure.

The attachment point is identified by a mandatory sign showing a crane hook. Only a crane hook should be inserted through the lifting eye in preparation for suspended transport.

The crane lifting eye is rated for the permissible total weight of the machine.

Overview:

- Precautions for snow and ice
- Check the condition of the lifting eye
- Example of improperly inserted crane hook
- Example of properly inserted crane hook
- Lifting the machine by crane
- Setting down the machine by crane

⚠ WARNING

Death or serious injury can be caused by the machine falling or swinging!

- ➢ *Use a suitable crane and hoist that correspond to the permissible total weight of the machine.*
- ➢ *Use the appropriate crane hook for the size of the lifting eye.*
- ➢ *Only lift the machine in a position that conforms with its basic structural shape.*
- ➢ *Avoid swinging.*

Precautions for snow and ice

Significant snow and/or ice build-up can occur on the machine when operating in winter conditions. This may adversely affect the machine's center of gravity (tilting).
The permissible load of both the crane and machine hoists may be exceeded.

➢ Carry out the following preliminary tasks in conditions of snow and ice:

- Remove any snow and/or ice from the machine before lifting by crane.
- Ensure that the lifting eye cover plate is freely accessible and can be opened.

Check the condition of the lifting eye

Precondition The machine is switched off.

The machine is securely parked.

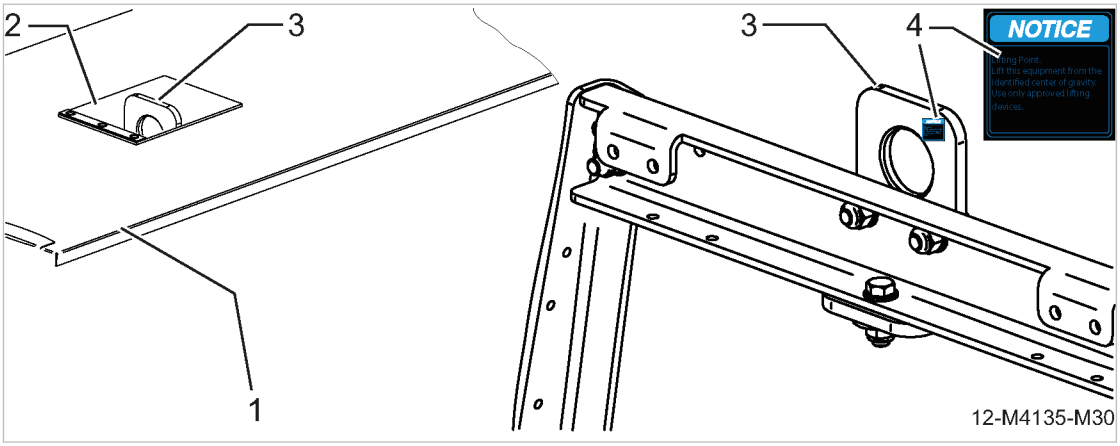

Fig. 68 Position of lifting eye

[1] Enclosure
[2] Opening in central section of enclosure
[3] Crane lifting eye
[4] Mandatory *Crane lifting point* sign

1. Open the lifting eye cover plate.
2. Make visual check of proper condition of lifting eye.
   No signs of deformation.
   No signs of cracking.
3. Check lifting eye for proper seating.
   Lifting eye is properly seated.
4. Position the crane hook vertically above the lifting eye.

Lifting eye shows signs of deformation or cracking.

➢ Do not lift the machine with a crane under any circumstances.

➢ Contact an authorized KAESER service representative to repair the damage.

Example of improperly inserted crane hook

An oversized crane hook cannot be properly inserted through the lifting eye. If the machine is lifted with the improperly inserted crane hook, the lifting eye will be deformed. A deformed lifting eye cannot be used for suspended transport by crane.

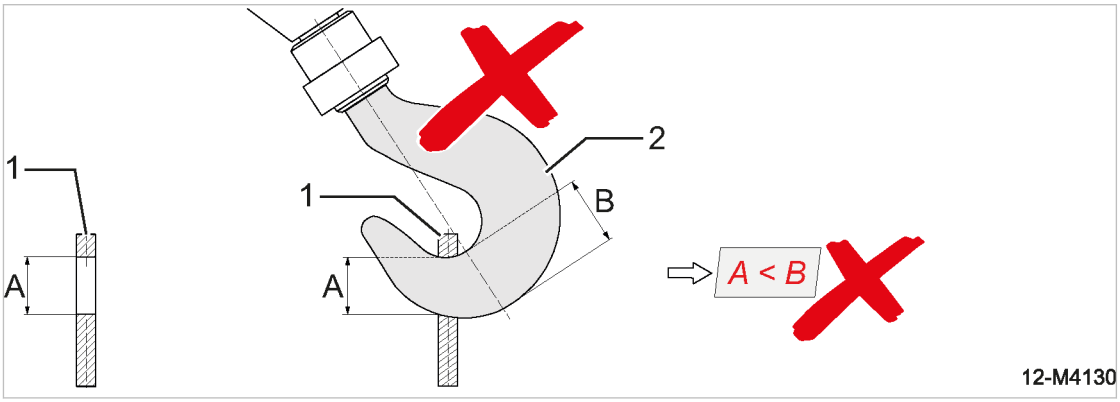

Fig. 69 Example: Improperly inserted crane hook

[1] Cross section of lifting eye
[2] Crane hook
[A] Diameter of lifting eye
[B] Cross sectional height of crane hook

➢ Do not force the crane hook into the lifting eye.

Crane hook does not properly fit the lifting eye.

➢ Do not lift the machine with the crane under any circumstances, see Fig. 69.

➢ Use the appropriate crane hook for the size of the lifting eye.

➢ Use a crane hook meeting the condition *B < A*, see Fig. 70, Position 2.

Example of properly inserted crane hook

The crane hook must be compatible with the diameter of the lifting eye:

- Crane hooks must fit easily into the lifting eye.
- Freedom of motion must be retained when the load is suspended.

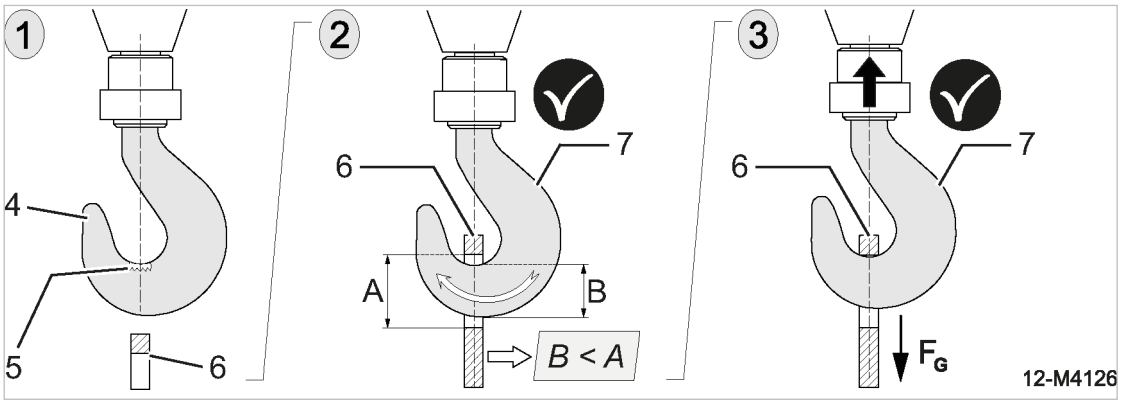

Fig. 70 Insert the crane hook properly

1 Crane hook in position above lifting eye
2 Crane hook properly attached
3 Crane hook makes contact with hook saddle
4 Crane hook
5 Crane hook saddle
6 Machine lifting eye
7 Crane hook B < A
A Diameter of lifting eye
B Cross sectional height of crane hook

1. Lower the crane hook.
2. Push tip of crane hook manually through the lifting eye.
3. Slowly raise crane hook until it is positioned vertically in lifting eye with freedom of movement.
   Crane hook is properly inserted and positioned vertically, see Fig. 70, Position 2.
4. Slowly raise crane hook until the hook saddle is seated against the upper surface of the lifting eye.
   Requirements for lifting the machine by crane are fulfilled, see Fig. 70, Position 3.

Lifting the machine by crane

1. **NOTICE** *Damage to the machine from jolting during lifting!*
   Danger of components breaking.
   ➢ *Lift the machine carefully.*
2. Lift the machine slowly and carefully.
3. Transport the machine slowly and carefully.
4. Avoid swinging.

Setting down by crane

1. **NOTICE** *Damage to the machine from setting it down incorrectly!*
   Danger of components breaking; in particular, chassis components may be damaged.
   ➢ *Set the machine down carefully.*
2. Set the machine down slowly and carefully.
3. Ensure the machine is not set down unevenly.
4. Unhook and remove the crane hook.
5. Close the lifting eye cover plate.

12.2.3 Option rw
Transporting the machine by forklift

Only stationary machines specified with a skid frame (Option rw) may be lifted and transported locally using a forklift. Stationary machines specified with optional skids are equipped with two lifting lugs into which two fork prongs can be inserted.

Precondition Qualified transport personnel are available and in receipt of written instructions.
Information regarding the weight of the machine is readily available (nameplate).
A suitable forklift (appropriate for the weight of the machine) is available.
The machine is switched off.
All connecting lines have been disconnected and removed.

➢ Follow all instructions carefully.

12.2.3.1 Ensuring safety

⚠ WARNING
Death or serious injury from falling loads!
➢ *Standing beneath raised loads is prohibited.*
➢ *Driving with a raised load is prohibited.*

⚠ WARNING
Death or serious injury can occur should the machine fall off or roll over.
➢ *Transporting personnel using the forklift is prohibited.*

➢ Observe the specific accident prevention regulations regarding transport by forklift.
➢ Instruct personnel in the immediate danger area around the forklift or load to leave the area.



Fig. 71 Prohibition signs for forklift transport

[1] Standing beneath a raised load
[2] Transporting personnel on the forklift
[3] Driving with a raised load

1. Never stand beneath a raised load.
2. Never move a raised load above personnel.
3. Never transport personnel on the forklift.
4. Never drive with a raised load.

12.2.3.2 Checking the lifting accessory

The lifting accessory of a forklift consists of a lift mast, a fork carriage and the two fork prongs themselves. The lifting accessory is positioned in front of the forward axle of the forklift.

The fork consists of two prongs which are mounted on the fork carriage. Chain hoists or hydraulic cylinders move the fork carriage up and down the lift mast.

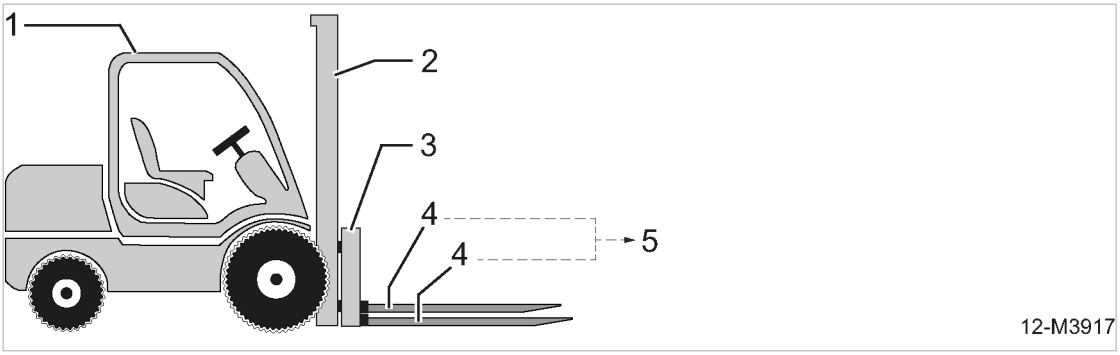

Fig. 72 Forklift example: Lifting accessory components

[1] Forklift
[2] Lift mast
[3] Fork carriage
[4] Fork prongs
[5] Fork

1. Check the fork prongs for cracks and deformation.
2. Check that both fork prongs are correctly mounted on the fork carriage.
3. Check the fork carriage for deformation.
4. Check the lift mast.
5. Check the chain hoist or hydraulic cylinders.

?

Both fork prongs show cracks and deformation.

➢ Replace both fork prongs.

12.2.3.3 Positioning the fork prongs under the machine

When using a forklift to transport a stationary machine with optional skids, the fork prongs must first be inserted into the lifting lugs.

NOTICE

Damage from incorrect insertion of the fork prongs!

➢ *Insert the fork prongs solely into the lifting lugs provided for this purpose.*

Option rw

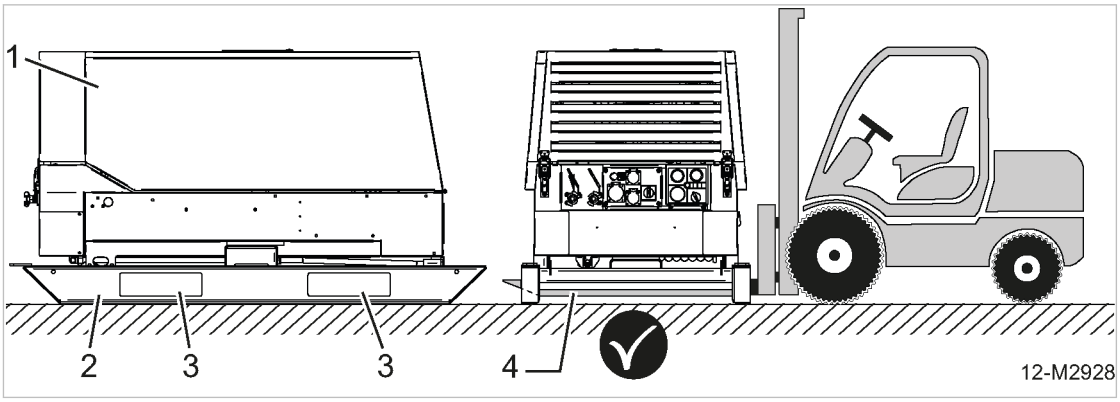

Fig. 73 Ensure both fork prongs are positioned under the machine

[1] Transverse side
[2] Optional skids
[3] Lifting lugs
[4] Machine with fork prongs correctly positioned

Precondition The machine is parked on even ground.

1. Close and lock the machine's sound enclosure.
2. Position the forklift at the transverse side of the machine, facing the lifting lugs.
3. Align the fork prongs with the lifting lugs on the machine.
4. Carefully drive the full length of the fork prongs into the lifting lugs on the skids.

Result The fork prongs are correctly positioned under the machine.

12.2.3.4 Lifting the machine

The lift mast remains vertical throughout the lifting procedure. Once the load has been lifted, the lift mast will be inclined in the direction of the arrow.

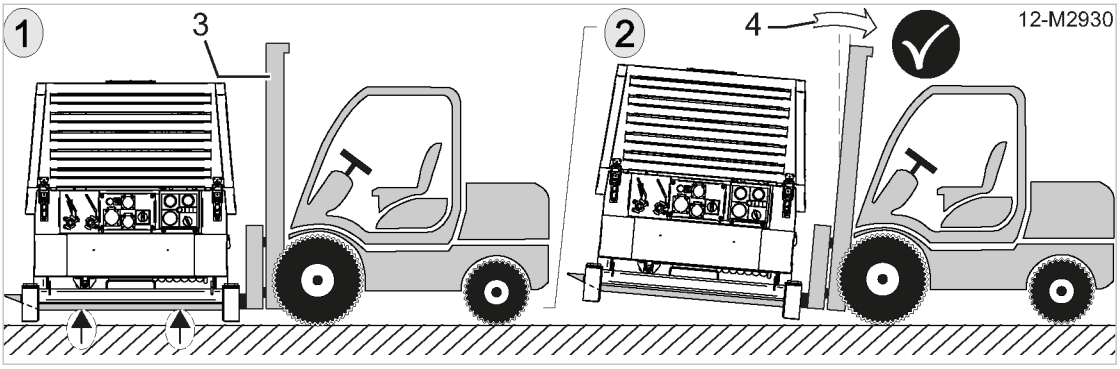

Fig. 74 Lifting the machine with a forklift

1	Lifting the load	3	Lift mast
2	Inclining the lift mast	4	Direction of arrow

Precondition The fork prongs are correctly positioned under the machine.

1. Lift the machine carefully.
2. Incline the lift mast in the direction of the arrow 4.

Result The machine is resting completely on the two fork prongs,
the specified transport height (minimum ground clearance) for horizontal transport has been reached.

Inclining the lift mast provides the optimum center of gravity for forklift and load,
thereby increasing the stability of the forklift.

Inclining the load also serves to prevent it from sliding along the fork prongs under braking.

12.2.3.5 Transporting the machine

Example:

- The machine is being unloaded from a loading ramp/HGV loading bed.
- The unloaded machine will be transported from Point A to Point B.

Precondition The machine has been unloaded and is resting on the fork prongs.

The fork prongs are elevated, see Fig. 75.

NOTICE

The machine falls off the elevated fork prongs during transportation!
Severe damage to the machine.

➢ *Driving with a raised load is prohibited.*

➢ *After unloading from the loading ramp/HGV loading bed, the fork carriage must be lowered immediately.*

Option rw

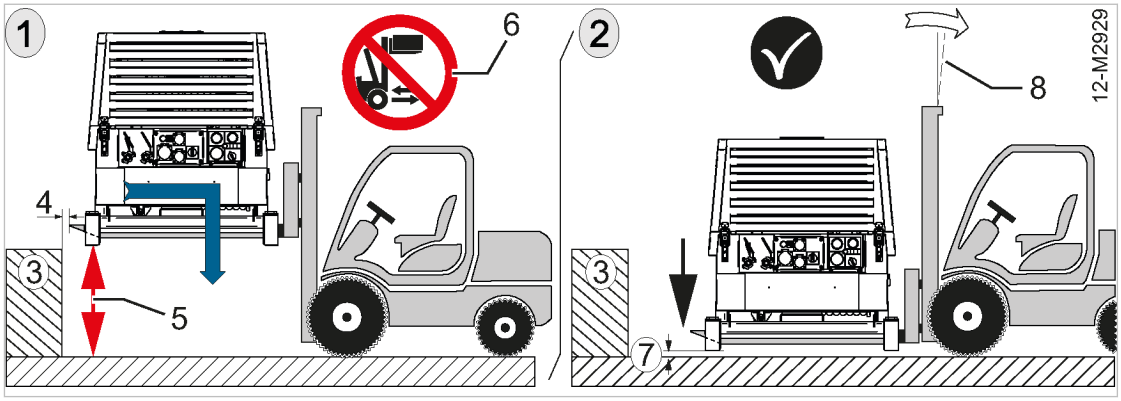

Fig. 75 Example: Transporting a machine by forklift

1. Lifting the machine from the loading ramp/HGV loading bed
2. Lowering the machine for horizontal transportation
3. Loading ramp/HGV loading bed
4. Loading sill clearance
5. Incorrect transport height
6. Prohibition sign “Driving with a raised load”
7. Correct transport height
8. Incline the lift mast in the direction of the arrow

1. Carefully reverse the forklift with the raised machine away from the loading ramp/HGV loading bed.
2. As soon as the specified horizontal clearance from the loading sill 4 has been reached, apply the brakes on the forklift.

   Forklift comes to a standstill.
3. Lower the fork carriage.

   Specified transport height (minimum ground clearance) is reached.
4. Incline the lift mast in the direction of the arrow.
5. Transport the machine at the specified transport height and with inclined lift mast from Point A to Point B.

12.2.3.6 Lowering the machine

Precondition The forklift has arrived at Point B with the machine raised to the specified transport height.

1. Carefully apply the brakes.

   Forklift comes to a standstill.
2. Return the lift mast to the vertical position.
3. Lower the fork carriage as slowly as possible, until both fork prongs have vertical clearance inside the lifting lugs.

   The machine is parked on even ground at Point B.
4. Reverse the forklift until both fork prongs are fully withdrawn from the lifting lugs.

12.2.4 Transporting as load

The medium of transport determines the type of packing and securing. Packing and securing methods must be such that, assuming proper handling, the goods arrive in perfect condition at the destination.

Always observe valid accident and safety regulations when transporting.

- National directives and regulations for securing loads should be followed.
- Load securing is taken to mean that by full braking or sudden turning the load will not slide, fall, roll, or cause unnecessary noise. Accepted technical regulations should be observed.
- Responsibility for properly secured loads falls on the driver, the vehicle keeper, and the carrier.

Contact KAESER with any questions regarding transporting or load securing.

KAESER accepts no liability and provides no guarantee for damage arising from incorrect transport or insufficient or incorrect load securing provisions.

For hire, rental, and trade fair plant, any transport safety devices used for the delivery must also be used for the return transport.

Use the following transport safety devices:

- Wedges
- Squared timbers
- Restraints
- Straps

Material

Chocks

Restraints or timber beams

Straps

NOTICE

Straps can damage the bodywork.
Movement during transportation can damage the bodywork!

- ➢ *Do not use straps over the bodywork.*
- ➢ *Use straps only over the chassis.*
- ➢ *Stationary machines with skid-type frames or rack may only be secured by means of straps across the chassis.*

- ➢ Comply with all instructions.

Further information

Additional measures must be taken for the transport of machines by sea or air. Please contact KAESER for more information.

12.2.4.1 Perform load securing for portable machines

If necessary, use straps or other bracket systems across the chassis.

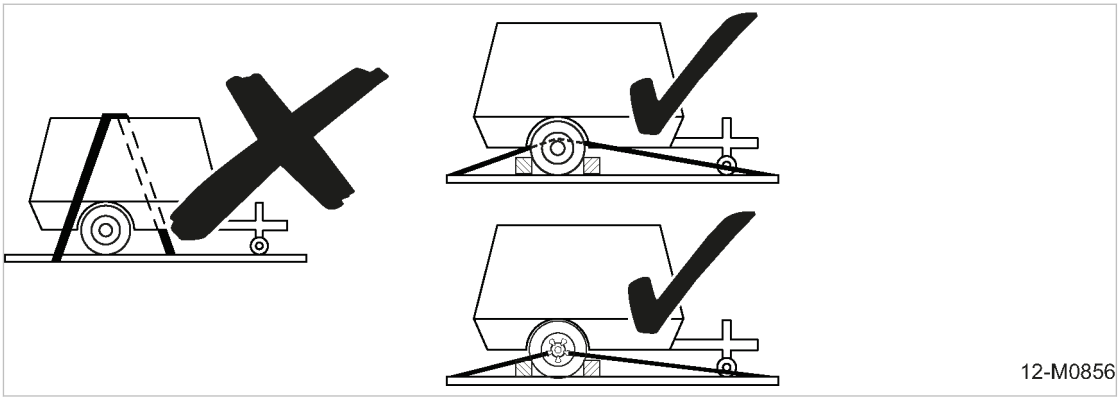

Fig. 76 Bracket systems as load securing (machine with chassis)

➢ The loads must be secured against rolling, tipping, slipping and falling.

12.2.4.2 Perform load securing for stationary machines

If necessary, use straps or other bracket systems across the skid-type frame/rack.

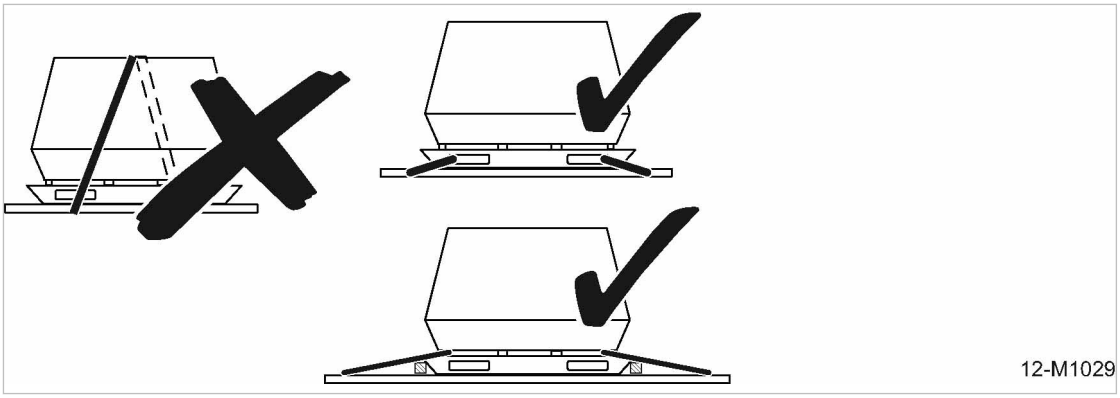

Fig. 77 Bracket systems as load securing (machine in stationary frame-type design)

➢ The load must be secured against rolling, tipping, slipping and falling.

12.2.4.3 To be noted before shipment as air freight

The machine is designated as dangerous goods for air freight purposes; any disregard can result in a heavy fine.

1. **⚠ WARNING** *Danger of fire or explosion from operating fluids/materials.*
   The machine incorporates an internal combustion engine.
   ➢ *Any dangerous fluids/materials contained within the machine must be removed before transport.*
2. All hazardous materials must be removed.
   These include:
   - Residues of fuel or fuel vapors.
   - Lubricating and cooling oils in the engine and compressor unit.
   - Electrolyte charges in rechargeable batteries.
   - Residual quantities of tool lubricating oil in the tool lubricator (option ea, ec).
   - Residual quantities of antifreeze in the frost protector (Option ba).

12.3 Storage

Moisture can lead to corrosion, particularly in the engine, airend and oil separator tank.

Frozen moisture can damage components, valve diaphragms and gaskets.

The following measures also apply to machines not yet commissioned.

Please consult with KAESER if you have questions to the appropriate storage and commissioning.

NOTICE

Moisture and frost can damage the machine!

- ➢ *Prevent ingress of moisture and formation of condensation.*
- ➢ *Maintain a storage temperature of >32 °F.*

➢ Store the machine in a dry place, free from frost if possible.

12.4 Disposal

To dispose of the machine in accordance with environmental regulations, all batteries must be removed and delivered to a designated disposal system. Substances that are harmful to living things and the environment can thus be removed and disposed of efficiently or reprocessed. In particular, this procedure facilitates the recycling of batteries.

All operating fluids in the machine must be drained and disposed of in accordance with environmental regulations. All components contaminated with operating fluids must be removed and disposed of in accordance with environmental regulations.

Any residual quantities of condensate must be drained and disposed of in accordance with environmental regulations.

Once these conditions have been fulfilled, deliver the machine to an authorised dispozal agent.

Overview:

- Remove all batteries.
- Drain all operating fluids.
- Drain the condensate.
- Remove used filters/filter elements.
- Deliver the machine to an authorized disposal agent.

➢ Follow all instructions carefully.

12.4.1 Removing the batteries

Overview:

- Remove the batteries
- Dispose of batteries in accordance with environmental regulations

1. Observe the safety instructions for handling batteries.
2. Observe the safety signs on the battery.

Further information When handling batteries, observe the specific safety rules and safety signs, see chapter 10.3.8.

➢ Remove all starter batteries from the internal combustion engine.

Disposing of batteries in accordance with environmental regulations:

Batteries contain substances that are harmful to living things and the environment. For this reason, batteries must not be disposed of with unsorted municipal waste.

Disposal facilities may be local recycling centers for used electrical devices and electronic waste, or the original points of sale.



Fig. 78 Battery labelling

[1] Do not dispose of battery with municipal waste
[2] Battery contains lead (if applicable)

1. Observe national disposal regulations!
2. Deliver batteries to the designated disposal system.

You actively contribute to the protection of the environment when you take used batteries to the designated disposal system.

12.4.2 Draining operating fluids

Material Receptacle

Cleaning cloth

To prevent it from accidentally igniting, always drain the fuel when working on the interior of the machine.

1. Drain and collect the following operating fluids from your machine.

Designation	Engine	Compressor
Fluid	Fuel	Cooling oil
	Engine oil	Transmission oil
	Coolant	Hydraulic oil
	Reduction agent additive from the exhaust gas after-treatment system	—

Tab. 104 Machine fluids

2. Drain and collect the following operating fluids from the options specified on your machine.

Designation	Low-temperature version option
Operating fluid	Antifreeze from the defroster

Tab. 105 Machine option fluids

Dispose of operating fluids and working materials and components contaminated with them in accordance with applicable environmental protection regulations.

12.4.3 Draining condensate

Material Receptacle
Cleaning cloth

1. Check compressed air options with condensate separation.
2. Drain and collect any residual quantities of condensate.

Dispose of any residual quantities of condensate and contaminated working materials in accordance with applicable environmental protection regulations.

12.4.4 Removing filters/filter elements

Material Cleaning cloth
Receptacle

1. Remove all filters/filter elements from the machine.

Designation	Engine	Compressor
Filters/filter elements	Oil filter	Oil filter
	Engine oil separator cartridge	Oil separator cartridge
	Filter/filter element, fuel prefilter	—
	Fuel filter	—
	Filter/filter element, fuel/water separator	—

Tab. 106 Machine filters/filter elements

2. Remove all filters/filter elements from the options specified on the machine.

Designation	Filter combination option	Fresh air filter option
Filters/filter elements	Prefilter	Adsorption filter element
	Fine filter	High-performance filter element

Tab. 107 Machine option filters/filter elements

Dispose of working materials and components contaminated with operating fluids in accordance with applicable environmental protection regulations.

12.4.5 Disposing of the machine

Precondition All batteries have been removed and delivered to the designated disposal system.

All operating fluids have been drained and disposed of in accordance with applicable environmental regulations.

Any residual quantities of condensate have been drained and disposed of in accordance with applicable environmental regulations.

All used filters/filter elements have been removed and disposed of in accordance with applicable environmental regulations.

➢ Deliver the machine to an authorized disposal agent.

13 Annex

13.1 Identification

13.1.1 Identification of the machine

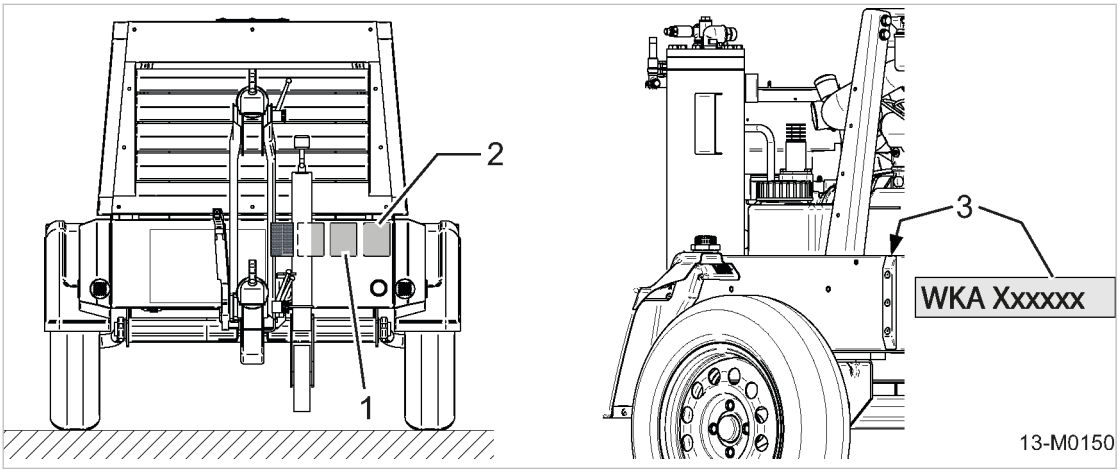

Fig. 79 Identification

1 Options label
2 Machine nameplate with serial number
3 VIN *)
* Vehicle identification number

13.1.2 Identification of the drive engine

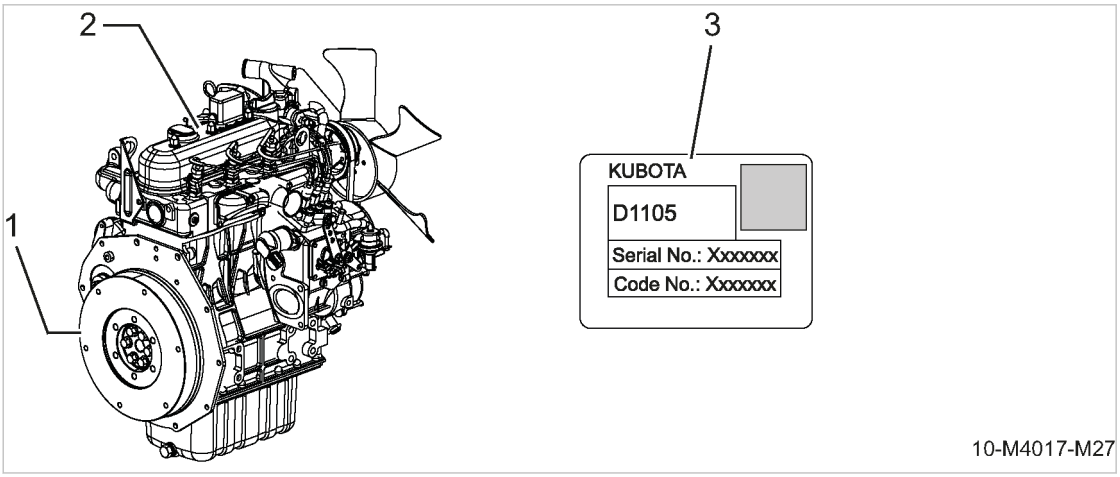

Fig. 80 Identification of the drive engine

1 Engine
2 Position of the nameplate
3 Nameplate with engine serial number

13.2 Pipeline and instrument flow diagram (P+I diagram)

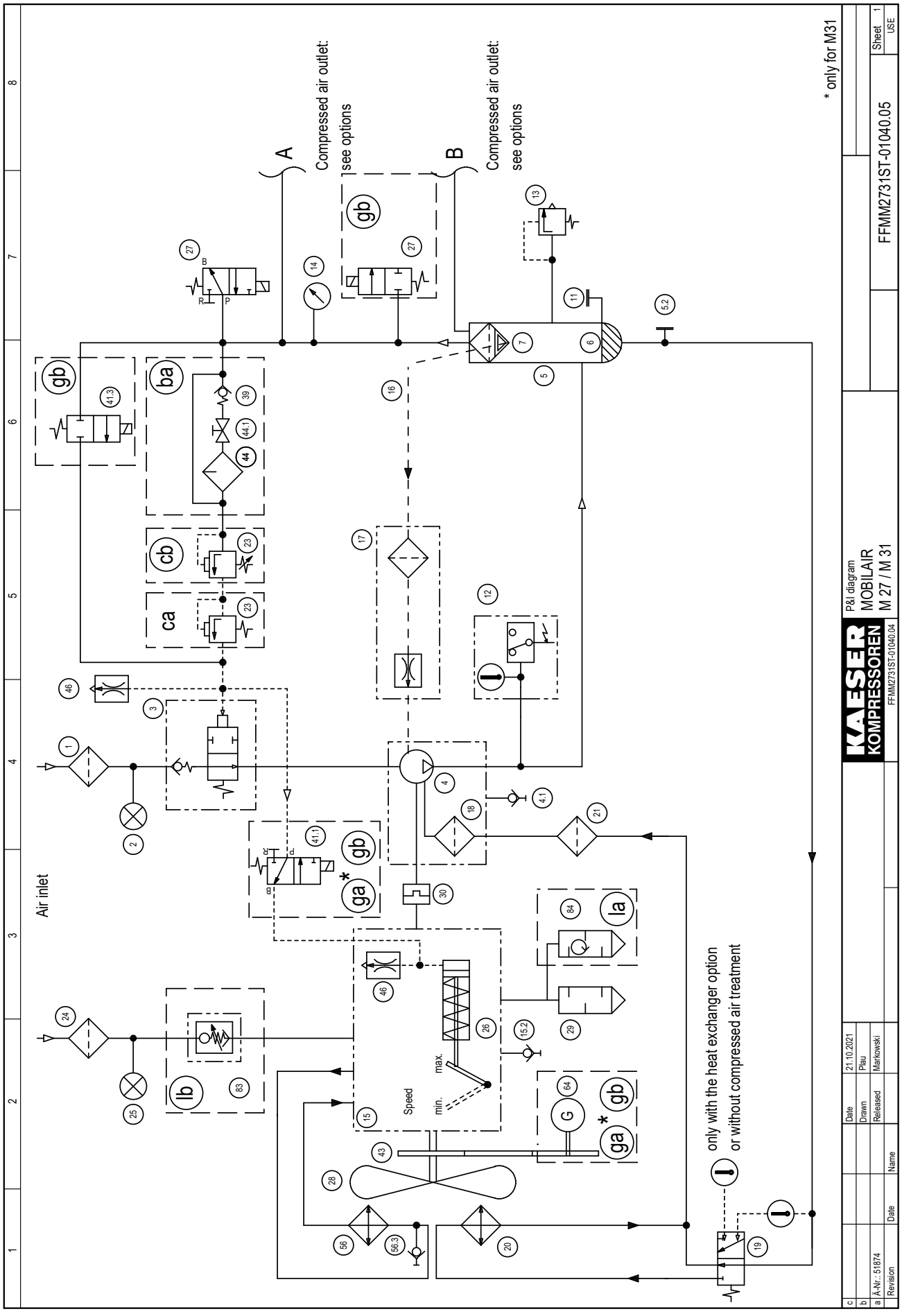
* only for M31
Compressed air outlet: see options
A
B
Compressed air outlet: see options
Air inlet
Speed
max.
min.
only with the heat exchanger option
or without compressed air treatment
P&I diagram
MOBILAIR
M 27 / M 31
FFMM2731ST-01040.04
FFMM2731ST-01040.05
Sheet 1
USE
Date
Drawn
Released
Name
21.10.2021
Piau
Markowski
A-Nr.: 51874
Revision

1	Compressor - Air filter
2	Filter maintenance indicator, Compressor - Air filter
3	Inlet valve
4	Rotary screw airend
4.1	Hose coupling - Oil drain device
5	Oil separator tank
5.2	Screw plug
6	Oil reserve
7	Oil separator cartridge
11	Oil filler with screw plug
12	Temperature gauge switch
13	Safety relief valve
14	Pressure gauge - Control panel
15	Diesel engine
15.2	Hose coupling - Oil drain device
16	Oil return line
17	Dirt trap with nozzle
18	Strainer
19	Thermostatic valve
20	Oil cooler
21	Oil filter
23	Proportional controller
24	Motor - Air filter
25	Filter maintenance indicator, Motor - Air filter
26	Engine speed adjusting piston
27	Venting valve
28	Fan
29	Exhaust silencer
30	Coupling
39	Check valve
41.1	Solenoid valve - Motor speed load control
41.3	Solenoid valve - Flow rate limiter
43	V-belt
44	Defroster
44.1	Shut-off valve
46	Nozzle (Secondary side Proportional controller)
56	Radiator
56.3	Hose coupling - Coolant drain
64	Generator
83	Engine air intake shut-off valve (automatic shutoff)
84	Spark arrestor

Option

ba	Low temperature equipment
ca	Without manual adjustment
cb	With manual adjustment
ga	Generator (only for M31)
gb	Generator with FAD limitation
la	Spark arrestor
lb	Spark arrestor + Engine air intake shut-off valve (automatic shutoff)

c				Date	21.10.2021	KAESER KOMPRESSOREN	P&I Diagram legend MOBILAIR M 27 / M 31		
b				Drawn	Plau				
a				Released	Markowski			FFMM2731ST-01040.05	Sheet 2
	Revision	Date	Name			FFMM2731ST-01040.04			USE

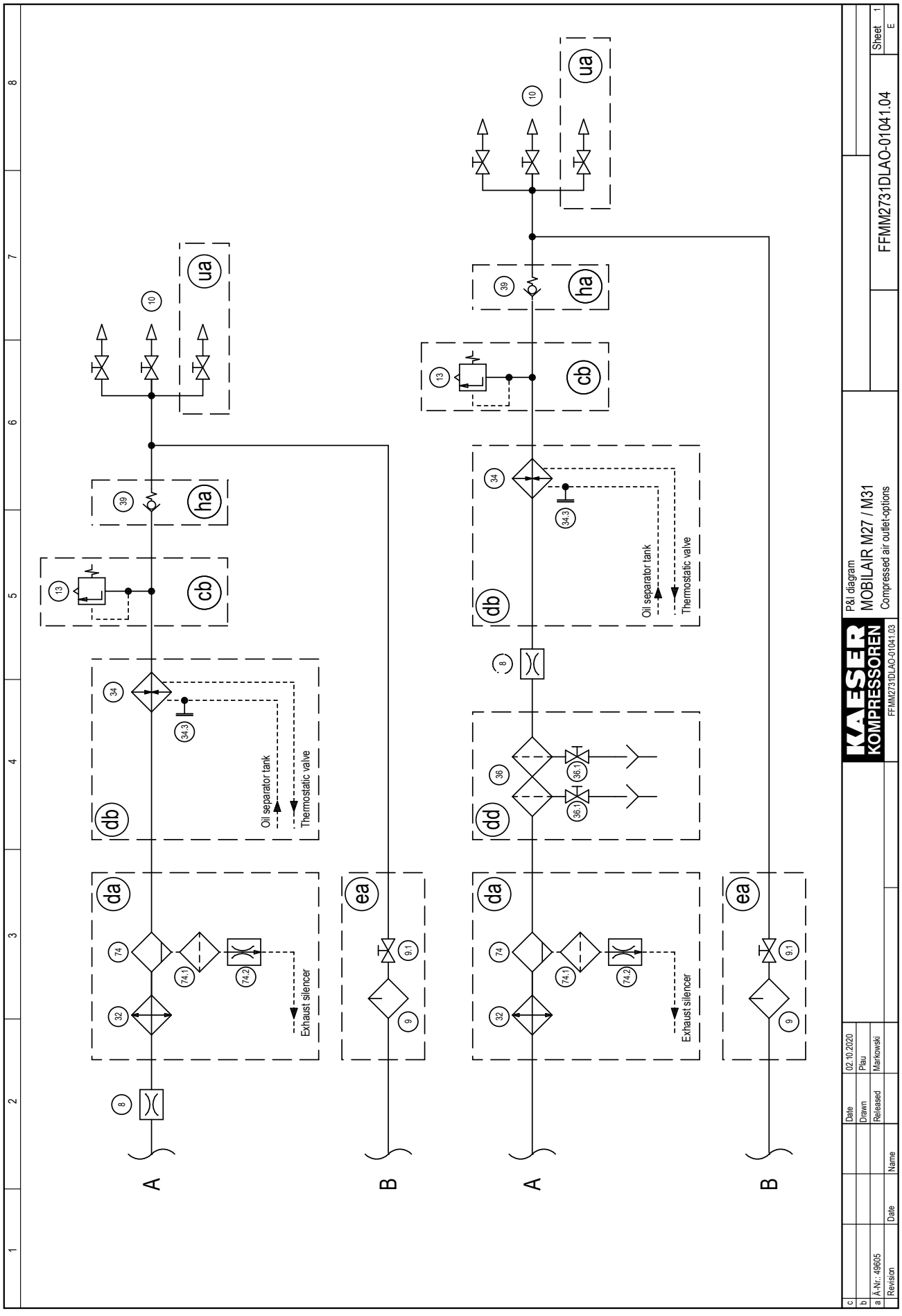
ua
ha
cb
db
da
ea
dd
Oil separator tank
Thermostatic valve
Exhaust silencer
A
B
P&I diagram
MOBILAIR M27 / M31
Compressed air outlet-options
FFMM2731DLAO-01041.04
FFMM2731DLAO-01041.03
Sheet 1
E
Date
Drawn
Released
02.10.2020
Plau
Markowski
A-Nr.: 49605
Revision
Name

1	2	3	4	5	6	7	8

8	Minimum pressure nozzle
9	Tool lubricator
9.1	Shut-off valve
10	Air distributor
13	Safety valve (Option cb, Optionally installed)
32	Compressed air cooler
34	Heat exchanger
34.3	Shut-off valve - Oil drain device
36	Filter combination
36.1	Condensate drain shut-off valve
39	Check valve
74	Water separator
74.1	Dirt trap
74.2	Nozzle

Option

cb	With manual adjustment option
da	Compressed air aftercooler + Water separator
db	Heat exchanger
dd	Filter combination
ea	Tool lubricator
ha	Check valve
ua	Hose reel

c				Date	02.10.2020		P&I diagram legend		
b				Drawn	Plau	KAESER KOMPRESSOREN	MOBILAIR M27 / M31		
a				Released	Markowski		Compressed air outlet-options	FFMM2731DLAO-01041.04	Sheet 2
	Revision	Date	Name			FFMM2731DLAO-01041.03			E

13.3 Dimensional drawings

13.3.1 Option rb/rm/rr Dimensional drawing – chassis

- Option rb - Chassis EU version
- Option rm - Chassis with height adjustment
- Option rr - Chassis without service brake

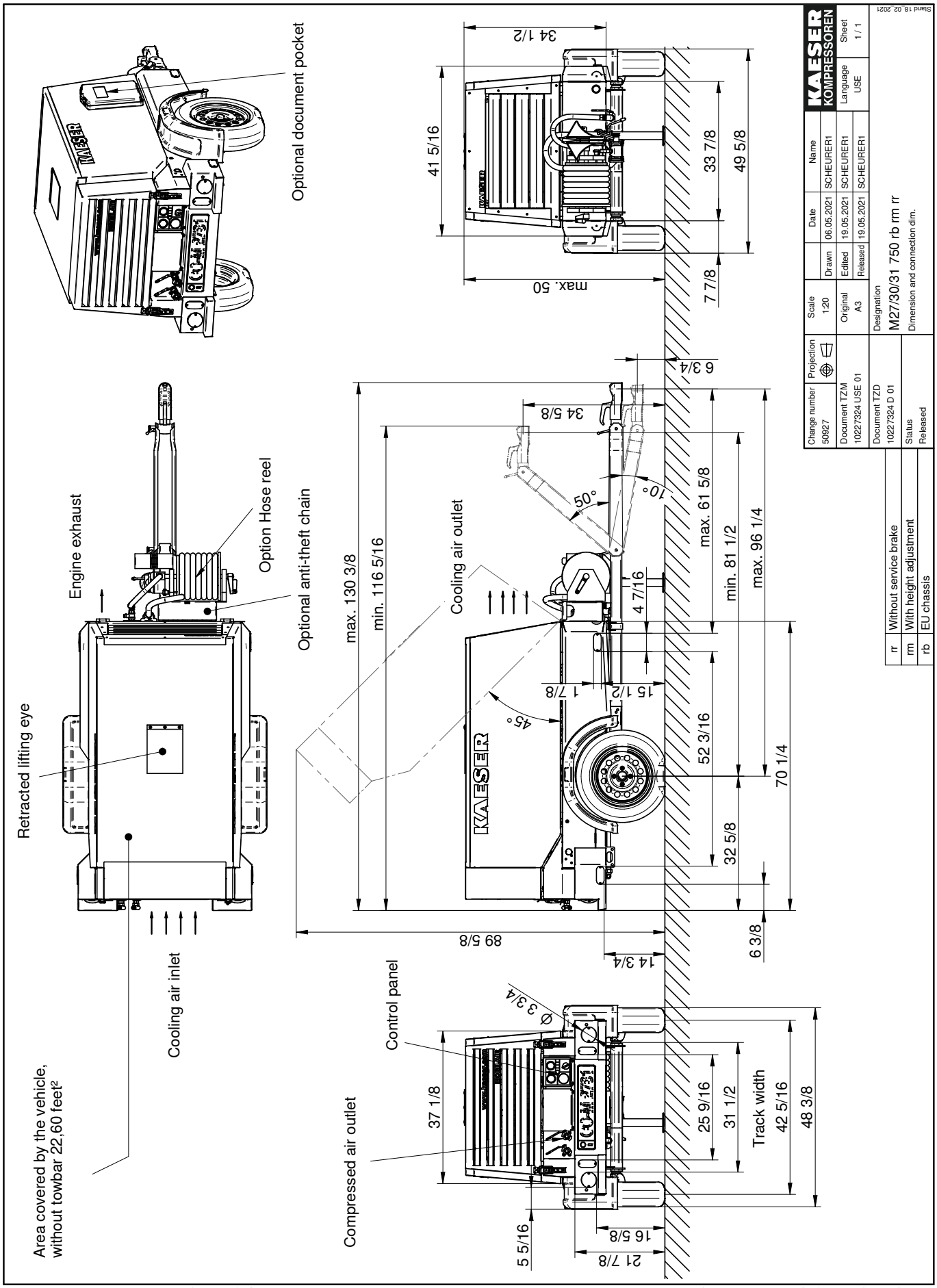

Change number	Projection	Scale		Date	Name	KAESER KOMPRESSOREN	
50927		1:20	Drawn	06.05.2021	SCHEURER1		
Document TZM			Edited	19.05.2021	SCHEURER1	Language	Sheet
10227324 USE 01		Original A3	Released	19.05.2021	SCHEURER1	USE	1 / 1
Document TZD		Designation					
10227324 D 01		M27/30/31 750 rb rm rr					
Status		Dimension and connection dim.					
Released							

rr	Without service brake
rm	With height adjustment
rb	EU chassis

Stand 18. 02. 2021

Drawings remain our exclusive property.
They are entrusted only for the agreed upon purpose.
Copies or any other reproduction, including storage, treatment and distribution by use of electronic systems is not allowed for any other than the agreed upon purpose.
Neither originals nor reproductions may be given to or made available to third parties.

Subject to development-related changes.
Drawing may be altered only via CAD.

13.3.2 Option rb/rm/rs Dimensional drawing – chassis

- Option rb - Chassis EU version
- Option rm - Chassis with height adjustment
- Option rs - Chassis with overrun brake

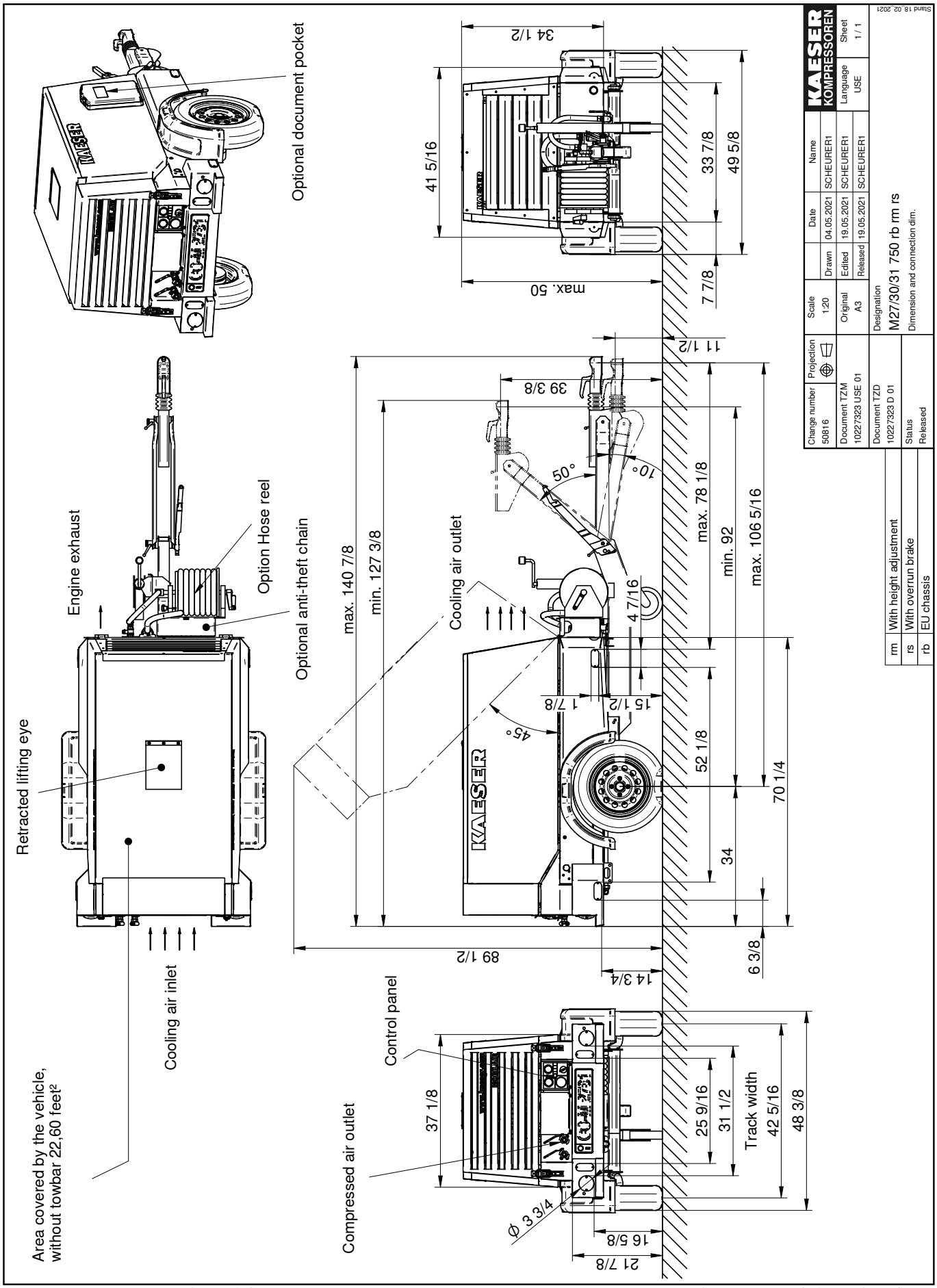

Change number	Projection	Scale		Date	Name
50816		1:20	Drawn	04.05.2021	SCHEURER1
Document TZM			Edited	19.05.2021	SCHEURER1
10227323 USE 01		Original A3	Released	19.05.2021	SCHEURER1
Document TZD		Designation			
10227323 D 01		M27/30/31 750 rb rm rs			
		Dimension and connection dim.			

rm	With height adjustment
rs	With overrun brake
rb	EU chassis

Status
Released

KAESER KOMPRESSOREN — Language: USE — Sheet: 1 / 1

Stand 18. 02. 2021

Drawings remain our exclusive property.
They are entrusted only for the agreed upon purpose.
Copies or any other reproduction, including storage, treatment and distribution by use of electronic systems is not allowed for any other than the agreed upon purpose.
Neither originals nor reproductions may be given to or made available to third parties.

Subject to development-related changes.
Drawing may be altered only via CAD.

13.3.3 Option rc/ro/rr
Dimensional drawing – chassis

- Option rc - Chassis, GB type
- Option ro - Chassis without height adjustment
- Option rr - Chassis without service brake

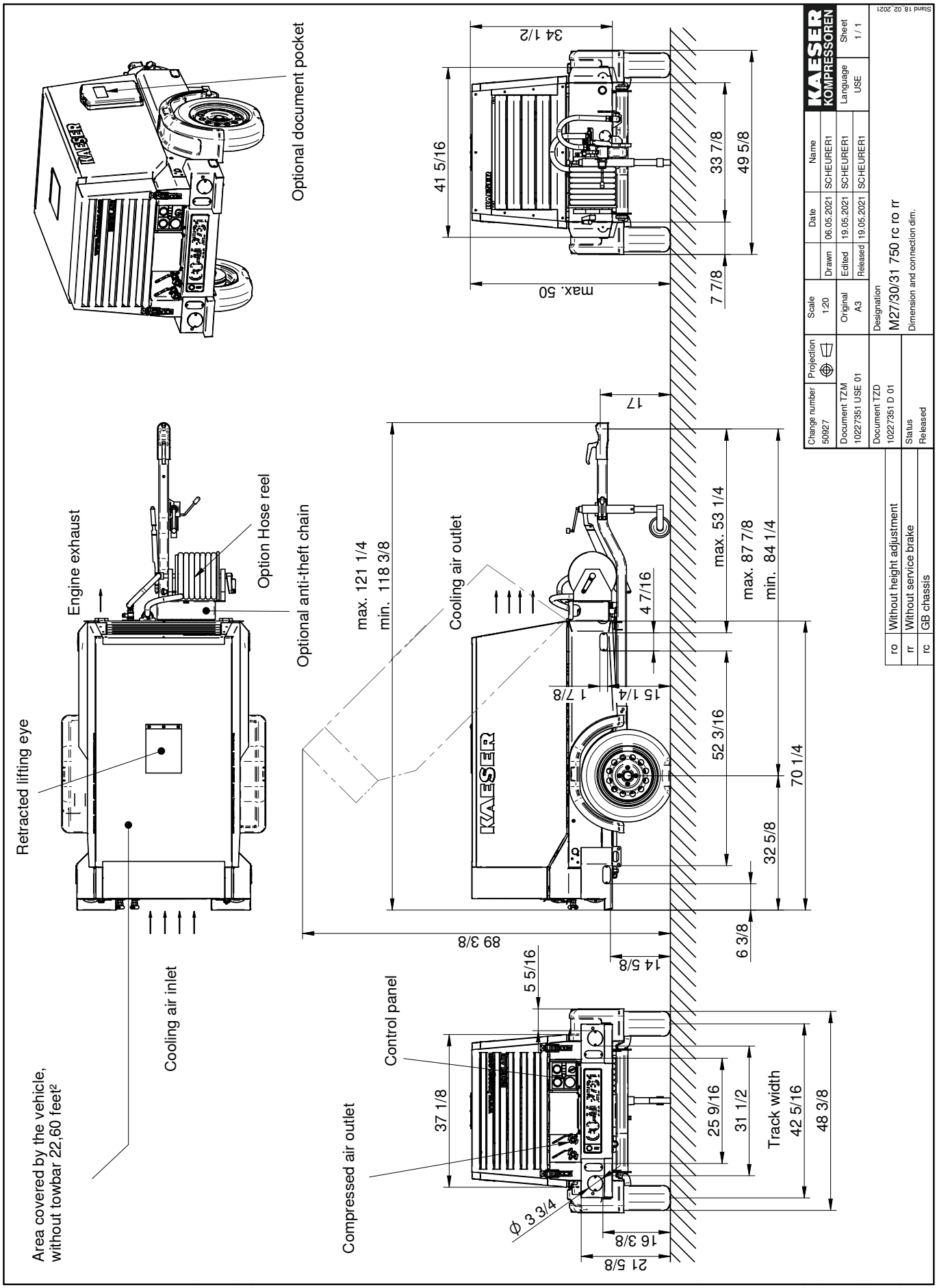

Change number	Projection	Scale		Date	Name
50927		1:20	Drawn	06.05.2021	SCHEURER1
Document TZM			Edited	19.05.2021	SCHEURER1
10227351 USE 01		Original A3	Released	19.05.2021	SCHEURER1
Document TZD		Designation			
10227351 D 01		M27/30/31 750 rc ro rr			
		Dimension and connection dim.			

ro	Without height adjustment	Status	Released
rr	Without service brake		
rc	GB chassis		

KAESER KOMPRESSOREN — Language: USE — Sheet: 1 / 1

Stand 18. 02. 2021

Drawings remain our exclusive property.
They are entrusted only for the agreed upon purpose.
Copies or any other reproduction, including storage, treatment and distribution by use of electronic systems is not allowed for any other than the agreed upon purpose.
Neither originals nor reproductions may be given to or made available to third parties.

Subject to development-related changes.
Drawing may be altered only via CAD.

13.3.4 Option rg/rp/rr Dimensional drawing – Chassis

- Option rg - Chassis, EN version
- Option rp - Chassis with anti-twist protection
- Option rr - Chassis without service brake

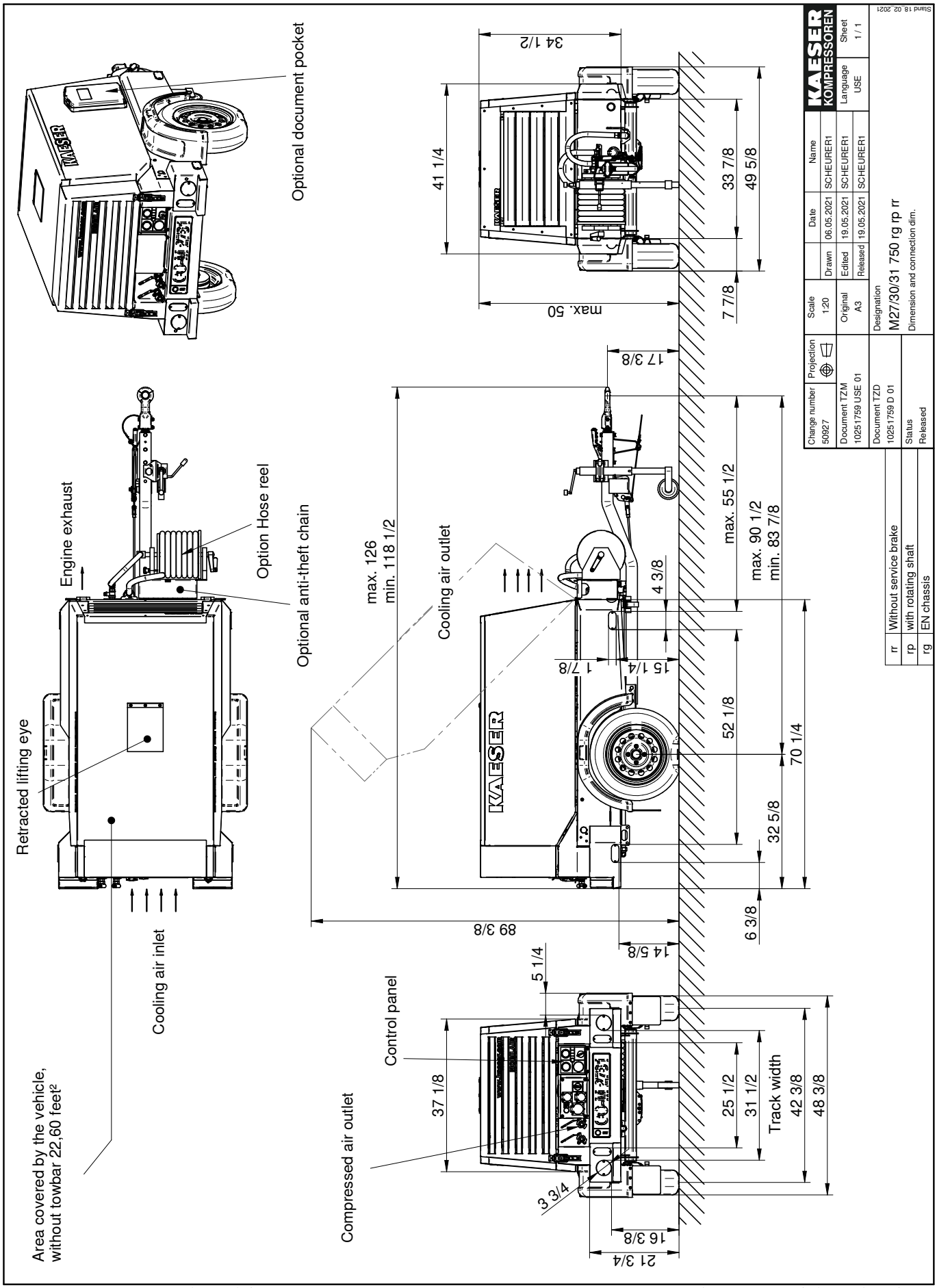

Change number	Projection	Scale		Date	Name
50927		1:20	Drawn	06.05.2021	SCHEURER1
Document TZM			Edited	19.05.2021	SCHEURER1
10251759 USE 01		Original A3	Released	19.05.2021	SCHEURER1
Document TZD		Designation			
10251759 D 01		M27/30/31 750 rg rp rr			
		Dimension and connection dim.			

KAESER KOMPRESSOREN — Language USE — Sheet 1 / 1

Stand 18. 02. 2021

rr	Without service brake
rp	with rotating shaft
rg	EN chassis

Drawings remain our exclusive property.
They are entrusted only for the agreed upon purpose.
Copies or any other reproduction, including storage, treatment and distribution by use of electronic systems is not allowed for any other than the agreed upon purpose.
Neither originals nor reproductions may be given to or made available to third parties.

Subject to development-related changes.
Drawing may be altered only via CAD.

13.3.5 Option rc/ro/rs Dimensional drawing – chassis

- Option rc - Chassis, GB type
- Option ro - Chassis without height adjustment
- Option rs - Chassis with overrun brake

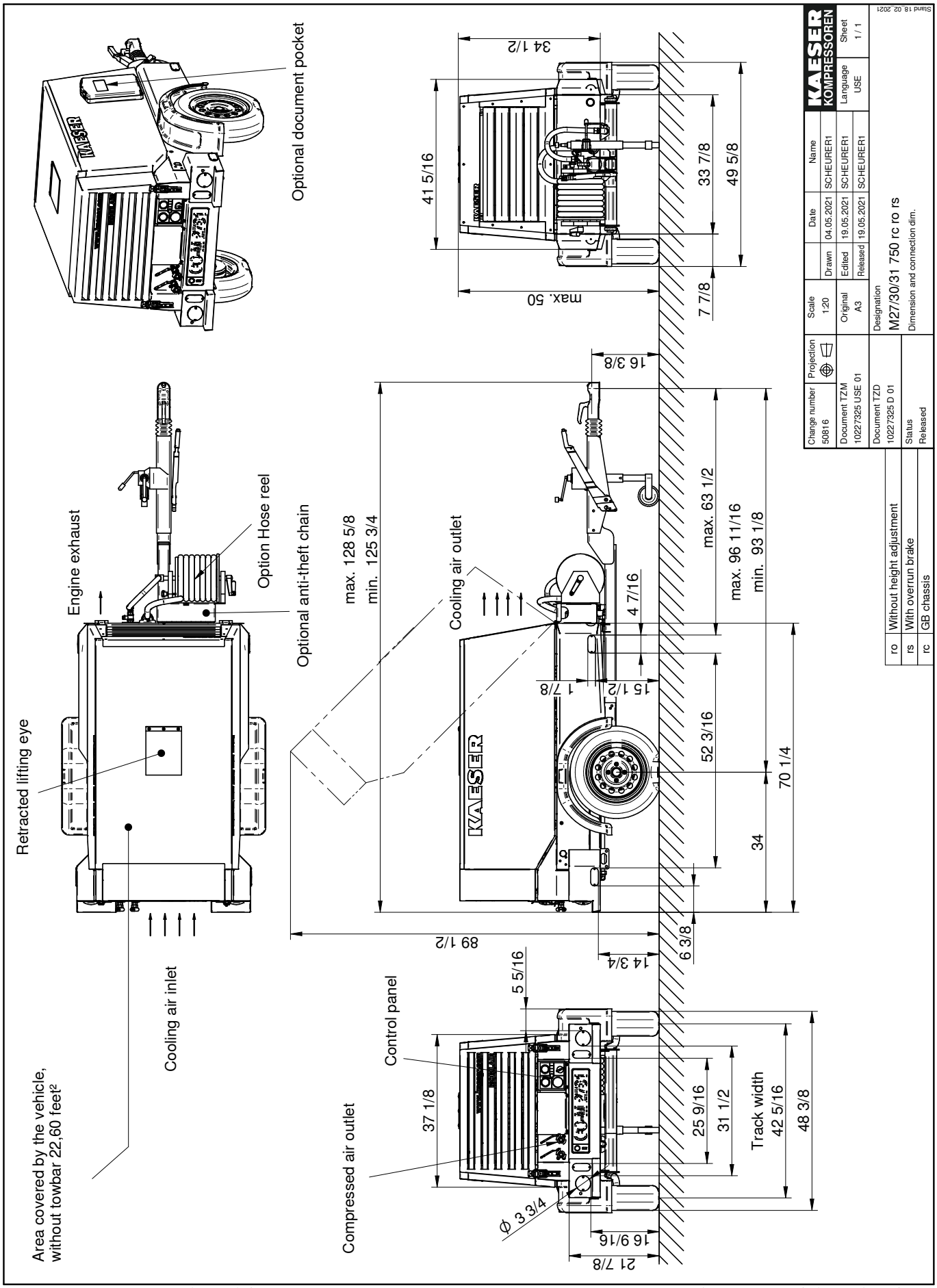
Optional document pocket
Engine exhaust
Option Hose reel
Optional anti-theft chain
Retracted lifting eye
Cooling air inlet
Area covered by the vehicle, without towbar 22,60 feet²
Cooling air outlet
Control panel
Compressed air outlet
max. 128 5/8
min. 125 3/4
max. 63 1/2
max. 96 11/16
min. 93 1/8
Track width
34 1/2
41 5/16
33 7/8
49 5/8
max. 50
7 7/8
16 3/8
4 7/16
1 7/8
15 1/2
52 3/16
70 1/4
34
89 1/2
14 3/4
6 3/8
5 5/16
37 1/8
25 9/16
31 1/2
42 5/16
48 3/8
Ø 3 3/4
16 9/16
21 7/8
KAESER KOMPRESSOREN
Change number 50816
Projection
Scale 1:20
Date
Name
Drawn 04.05.2021 SCHEURER1
Edited 19.05.2021 SCHEURER1
Released 19.05.2021 SCHEURER1
Original A3
Language USE
Sheet 1 / 1
Document TZM 10227325 USE 01
Document TZD 10227325 D 01
Designation M27/30/31 750 rc ro rs
Dimension and connection dim.
Status Released
ro Without height adjustment
rs With overrun brake
rc GB chassis
Stand 18. 02. 2021
Drawings remain our exclusive property.
They are entrusted only for the agreed upon purpose.
Copies or any other reproduction, including storage, treatment and distribution by use of electronic systems is not allowed for any other than the agreed upon purpose.
Neither originals nor reproductions may be given to or made available to third parties.
Subject to development-related changes.
Drawing may be altered only via CAD.

13.3.6 Option rd/ro/rr
Dimensional drawing – chassis

- Option rd - Chassis, US type
- Option ro - Chassis without height adjustment
- Option rr - Chassis without service brake

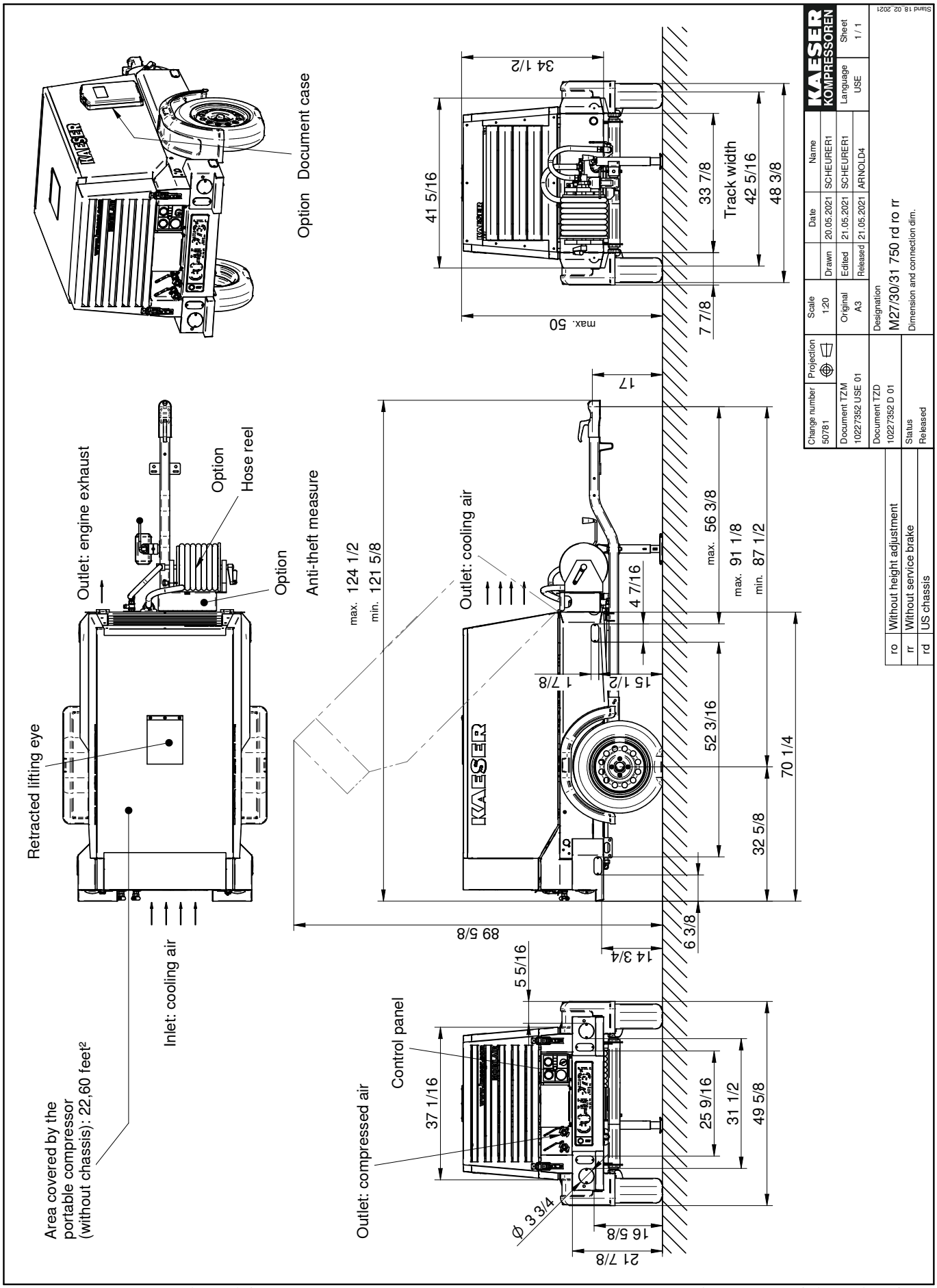

Drawings remain our exclusive property.
They are entrusted only for the agreed upon purpose.
Copies or any other reproduction, including storage, treatment and distribution by use of electronic systems is not allowed for any other than the agreed upon purpose.
Neither originals nor reproductions may be given to or made available to third parties.
Subject to development-related changes.
Drawing may be altered only via CAD.

13.3.7 Option rw
Dimensional drawing, stationary machine (skids)

- Option rw - Skid frame

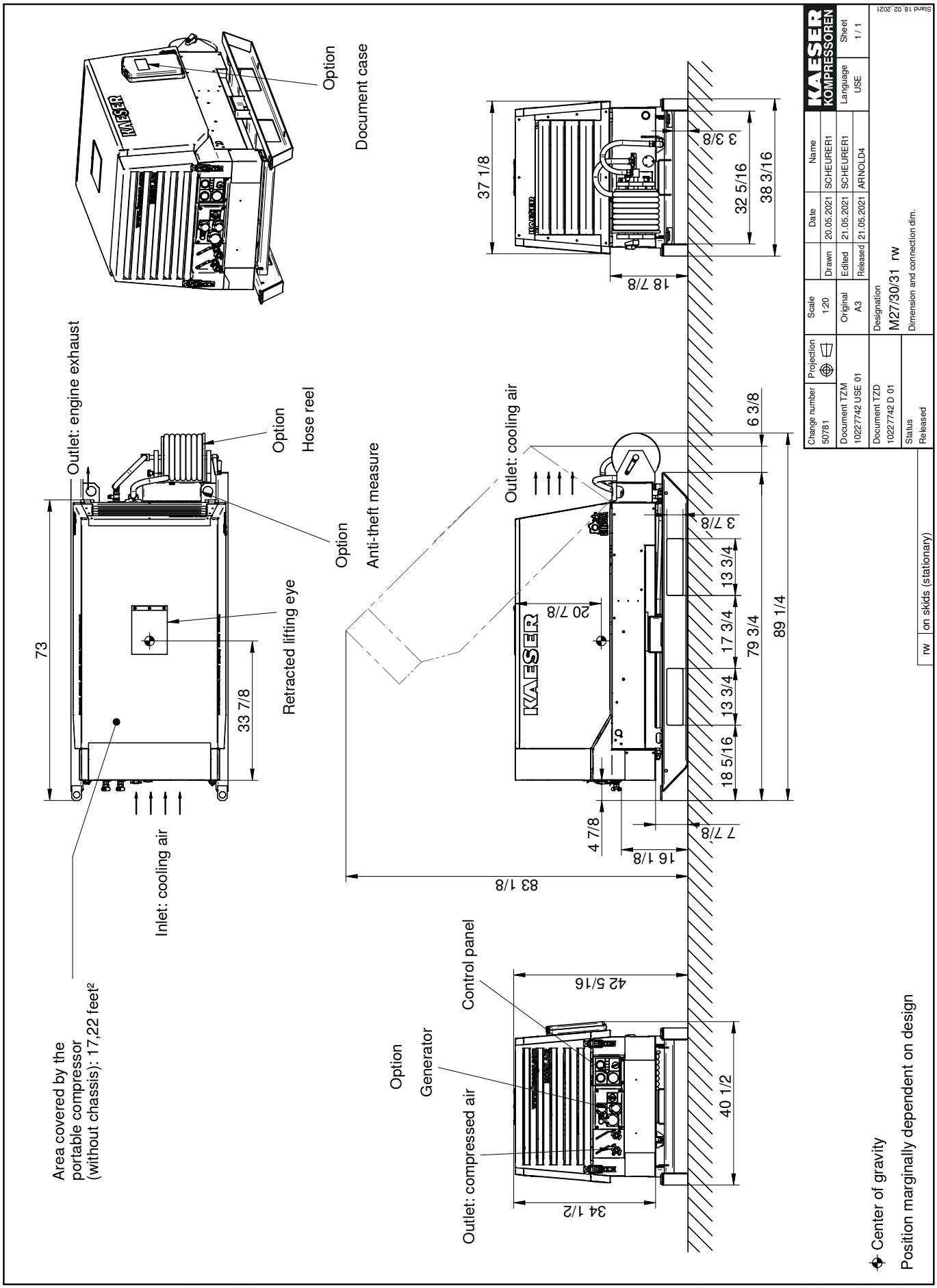

Drawings remain our exclusive property.
They are entrusted only for the agreed upon purpose.
Copies or any other reproduction, including storage, treatment and distribution by use of electronic systems is not allowed for any other than the agreed upon purpose.
Neither originals nor reproductions may be given to or made available to third parties.
Subject to development-related changes.
Drawing may be altered only via CAD.

13.3.8 Option rx
Dimensional drawing, stationary version (frame)

- Option rx - Frame

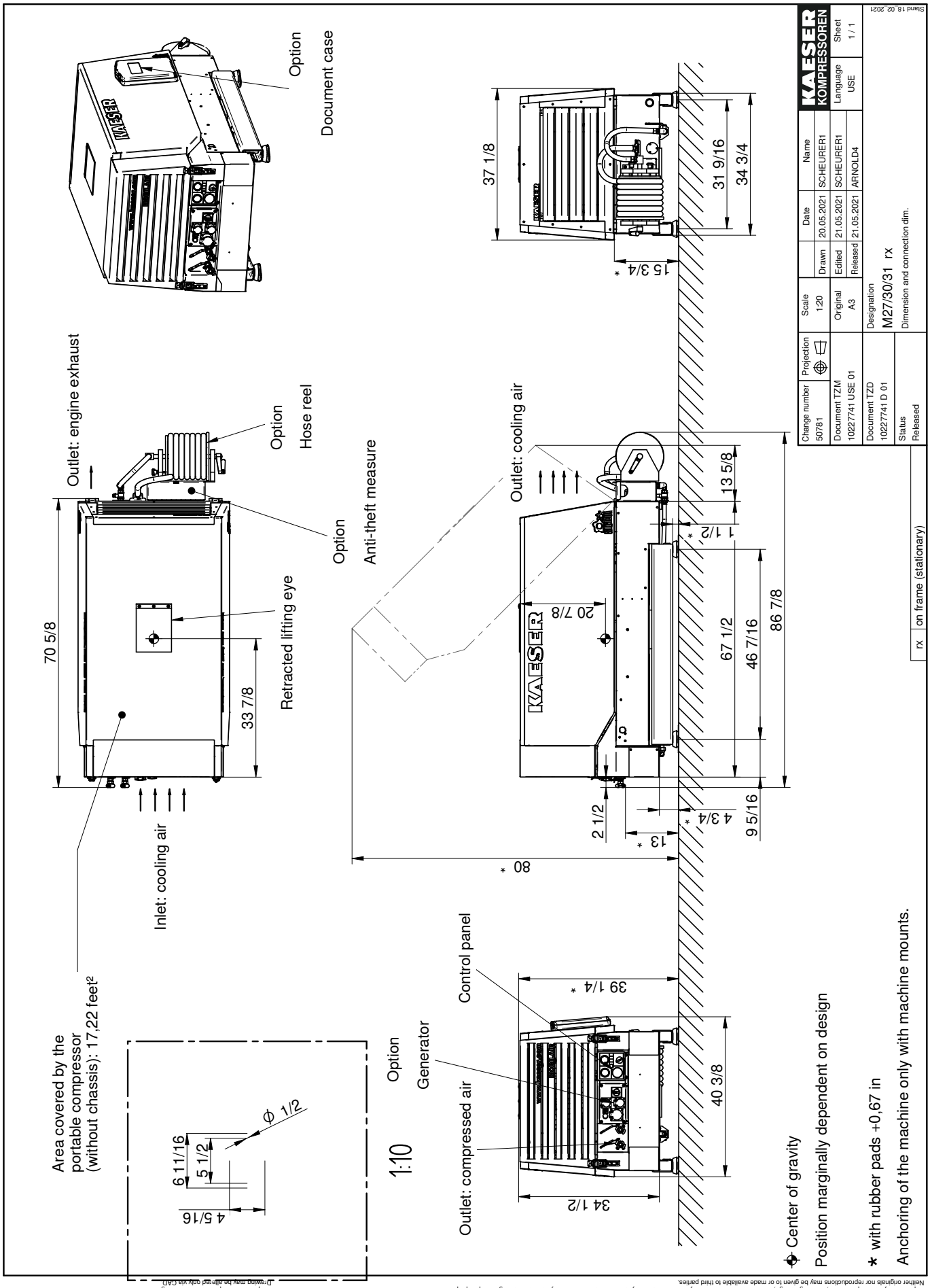
Option
Document case
Outlet: engine exhaust
Option
Hose reel
Option
Anti-theft measure
Retracted lifting eye
Inlet: cooling air
Area covered by the portable compressor (without chassis): 17,22 feet²
Outlet: cooling air
Control panel
Option
Generator
Outlet: compressed air
1:10
70 5/8
33 7/8
37 1/8
31 9/16
34 3/4
15 3/4 *
13 5/8
1 1/2 *
20 7/8
67 1/2
46 7/16
86 7/8
2 1/2
4 3/4 *
13 *
9 5/16
80 *
39 1/4 *
40 3/8
34 1/2
Ø 1/2
6 11/16
5 1/2
4 5/16
Center of gravity
Position marginally dependent on design
* with rubber pads +0,67 in
Anchoring of the machine only with machine mounts.
KAESER KOMPRESSOREN
Change number 50781
Projection
Scale 1:20
Drawn Date 20.05.2021 Name SCHEURER1
Edited 21.05.2021 SCHEURER1
Released 21.05.2021 ARNOLD4
Language USE
Sheet 1 / 1
Original A3
Designation M27/30/31 rx
Dimension and connection dim.
Document TZM 10227741 USE 01
Document TZD 10227741 D 01
Status Released
rx on frame (stationary)
Stand 18. 02. 2021
Drawings remain our exclusive property. They are entrusted only for the agreed upon purpose. Copies or any other reproduction, including storage, treatment and distribution by use of electronic systems is not allowed for any other than the agreed upon purpose. Neither originals nor reproductions may be given to or made available to third parties.
Subject to development-related changes. Drawing may be altered only via CAD.

13.4 Wiring diagrams

13.4.1 Electrical Diagram

Electrical diagrams

MOBILAIR M27/M30/M31

KUBOTA - Motor

Manufacturer: KAESER KOMPRESSOREN SE
Postfach 2143
96410 Coburg

The drawings remain our exclusive property. They are entrusted only for the agreed purpose. Copies or any other reproductions, including storage, treatment and dissemination by use of electronic systems must not be made for any other than the agreed purpose. Neither originals nor reproductions must be forwarded or otherwise made accessible to third parties.

c				Date	02.06.2021 E		KAESER KOMPRESSOREN	Cover page	=
b				Drawn	Sitter			MOBILAIR M27/M30/M31	+
a				Released	Fischer C.				
A	Change	Date	Name				AFA01028_02	DFA2731-01028.03	page 1 / 1 Sht.

Lfd. Nr. No.	Benennung Name		Zeichnungsnummer (Kunde) Drawing No. (customer)	Zeichnungsnummer (Hersteller) Drawing No. (manufacturer)	Blatt Page	Anlagenkennzeichen Unit designation
1	Cover page			DFA2731-01028.03	1	
2	List of contents			ZFA2731-01028.03	1	
3	Block diagram			UFA2731-01028.03	1	
4	Block diagram	Cross-reference		UFA2731-01028.03	2	
5	Circuit diagram	Cable set Battery		SFA2731.BK-01028.00	1	=BK
6	Circuit diagram	Compressor - unit		SFA2731.IKM-01028.00	1	=IKM
7	Circuit diagram	Control panel		SFA2731.BT-01028.02	1	=BT
8	Circuit diagram			SFA2731.IK1-01028.01	1	=IK1
9	Equipment parts list			GFA2731-01028.03	1	

c				Date	02.06.2021	KAESER KOMPRESSOREN	List of contents	=	
b				Drawn	Sitter		MOBILAIR M27/M30/M31	+	
a				Released	Fischer C.			ZFA2731-01028.03	page 1
B	Change	Date	Name						1 Sht.

general instructions

Control voltage 12VDC
All non-designated conductors H07V-K 1,5 mm² black

potentials:

15	switched plus + (unit ON)
19	Preheat with glowplug
30	+ terminal (Battery)
31	- terminal (Battery), earth
50	Starter-Control

components unit

-G1	Battery
-M1	Starter-Motor
-B0	Oil pressure switch Motor
-B7	Cooling water-Thermostat
-G2	Alternator
-M2	fuel pump
-N2	Regulator Alternator
-R10...-R12	Glowplug
-Y1	Fuel shut-off valve
-X21	Plug connection, Cable set Motor
-X22	Plug connection, Control panel (only Metal enclosure)
-X25	Plug connection, Cable set generator
-X42	connection Generator control box
-Y6	Valve for the motor speed full load control
-Y5	Inlet control valve
-Y9	Venting valve

components Control panel

-B6	Distance temperature gauge Compressor airend
-H0	Charging control lamp
-F1	Control fuse
-F3	Fuse
-K3	Starter - Relay
-K4	Relay Safety chain
-K26	glow relay
-K29	Relay fuel pump
-P8	Hour meter
-S1	Ignition switch

0 = STOP
1 = ON
2 = Preheat with glowplug
3 = START

-S10	switch "Control ON"
-X21	Plug connection, Control panel
-X23	Terminals: Terminal strip, Control panel
-X25	Plug connection, Control panel
-Y3	Venting valve

c				Date	02.06.2021	KAESER KOMPRESSOREN	Block diagram	=	
b				Drawn	Sitter		general instructions	+	
a				Released	Fischer C.			UFA2731-01028.03	page 1
C	Change	Date	Name			AFA01028_02			2 Sht.

1	2	3	4	5	6	7	8

general instructions

This document includes a common electrical diagram, consisting of documents:

module	Electrical diagrams	Cross-reference
Cable set: connection Battery	SFA2731.BK-01028.00	BK
Cable set: connection Motor	SFA2731.IKM-01028.00	IKM
cabling Control panel	SFA2731.BT-01028.02	BT
cabling unit components 1	SFA2731.IK1-01028.01	IK1

c				Date	02.06.2021	KAESER KOMPRESSOREN	Block diagram		=	
b				Drawn	Sitter		general instructions		+	
a				Released	Fischer C.		Cross-reference	UFA2731-01028.03	page 2	
C	Change	Date	Name			AFA01028_02			2 Sht.	

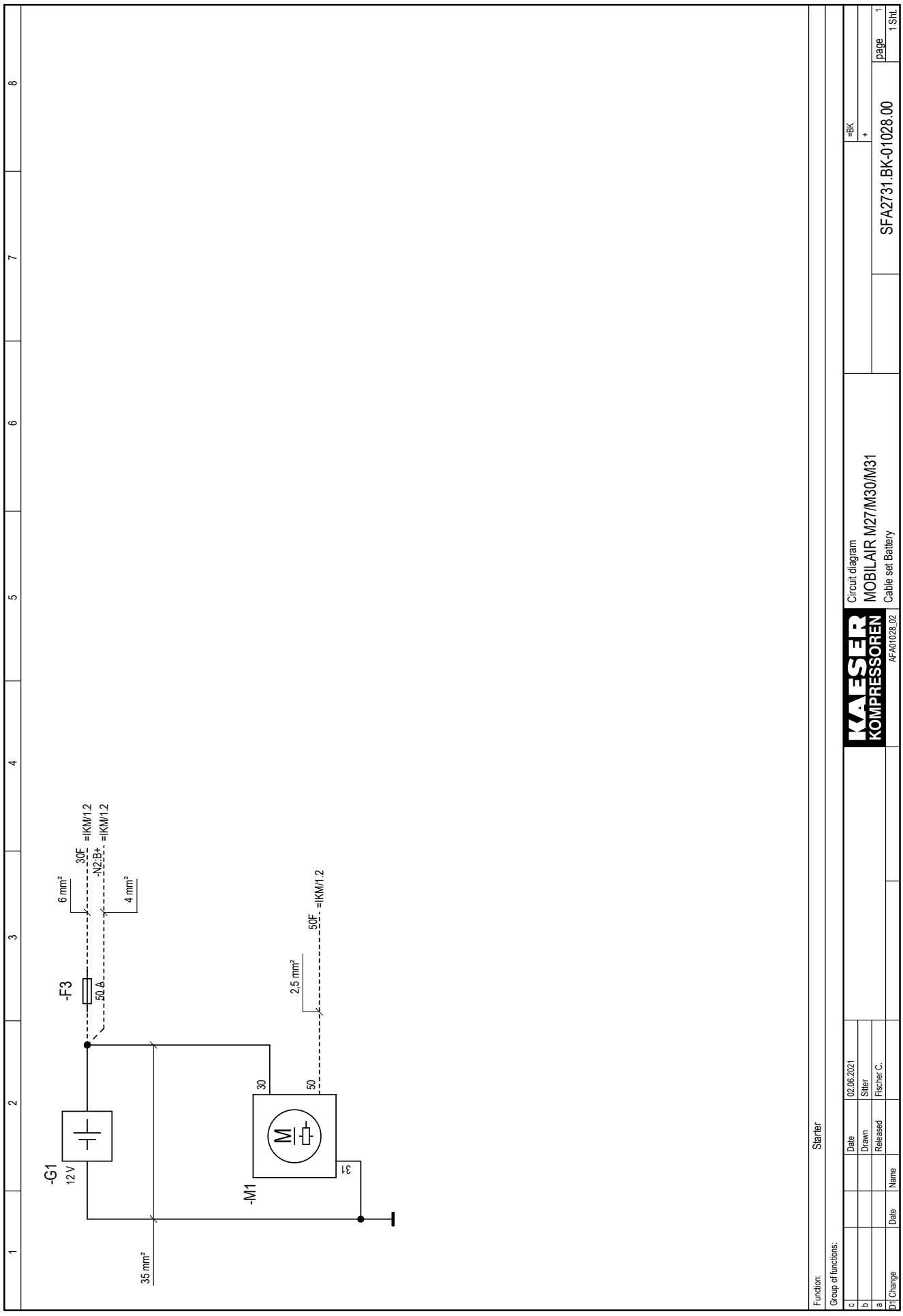
-G1
12 V
-F3
50 A
-M1
M
6 mm²
30F
=IKM/1.2
-N2:B+
=IKM/1.2
4 mm²
2.5 mm²
50F
=IKM/1.2
35 mm²
30
50
31
Function:
Starter
Group of functions:
Date
02.06.2021
Drawn
Sitter
Released
Fischer C.
Name
Date
Change
KAESER KOMPRESSOREN
AFA01028_02
Circuit diagram
MOBILAIR M27/M30/M31
Cable set Battery
SFA2731.BK-01028.00
=BK
+
page 1
1 Sht.

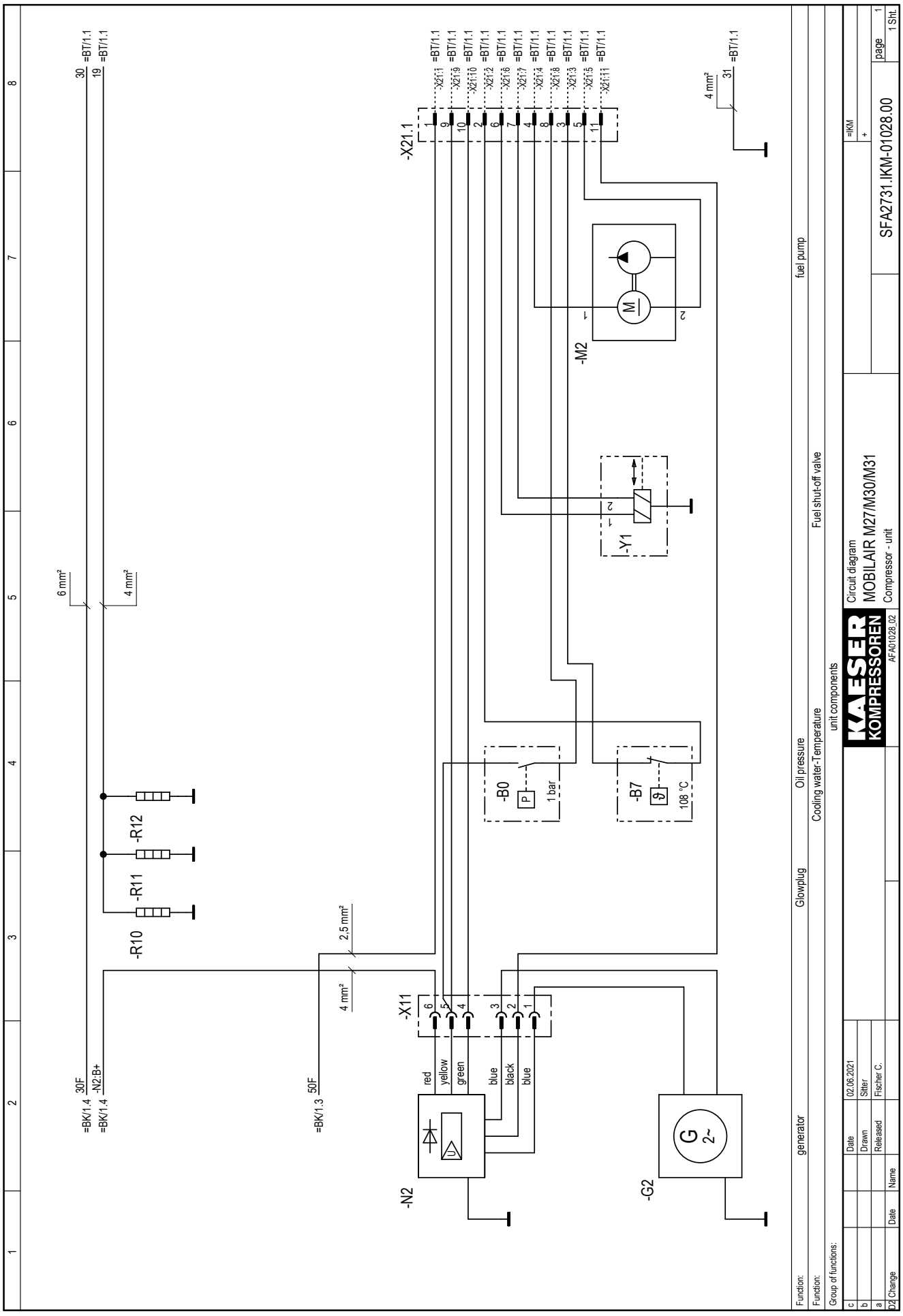
-X21.1
-M2
-Y1
-B0
-B7
-R10
-R11
-R12
-X11
-N2
-G2
fuel pump
Fuel shut-off valve
Cooling water-Temperature
unit components
Oil pressure
Glowplug
generator
1 bar
108 °C
SFA2731.IKM-01028.00
MOBILAIR M27/M30/M31
Compressor - unit
Circuit diagram
AFA01028.02

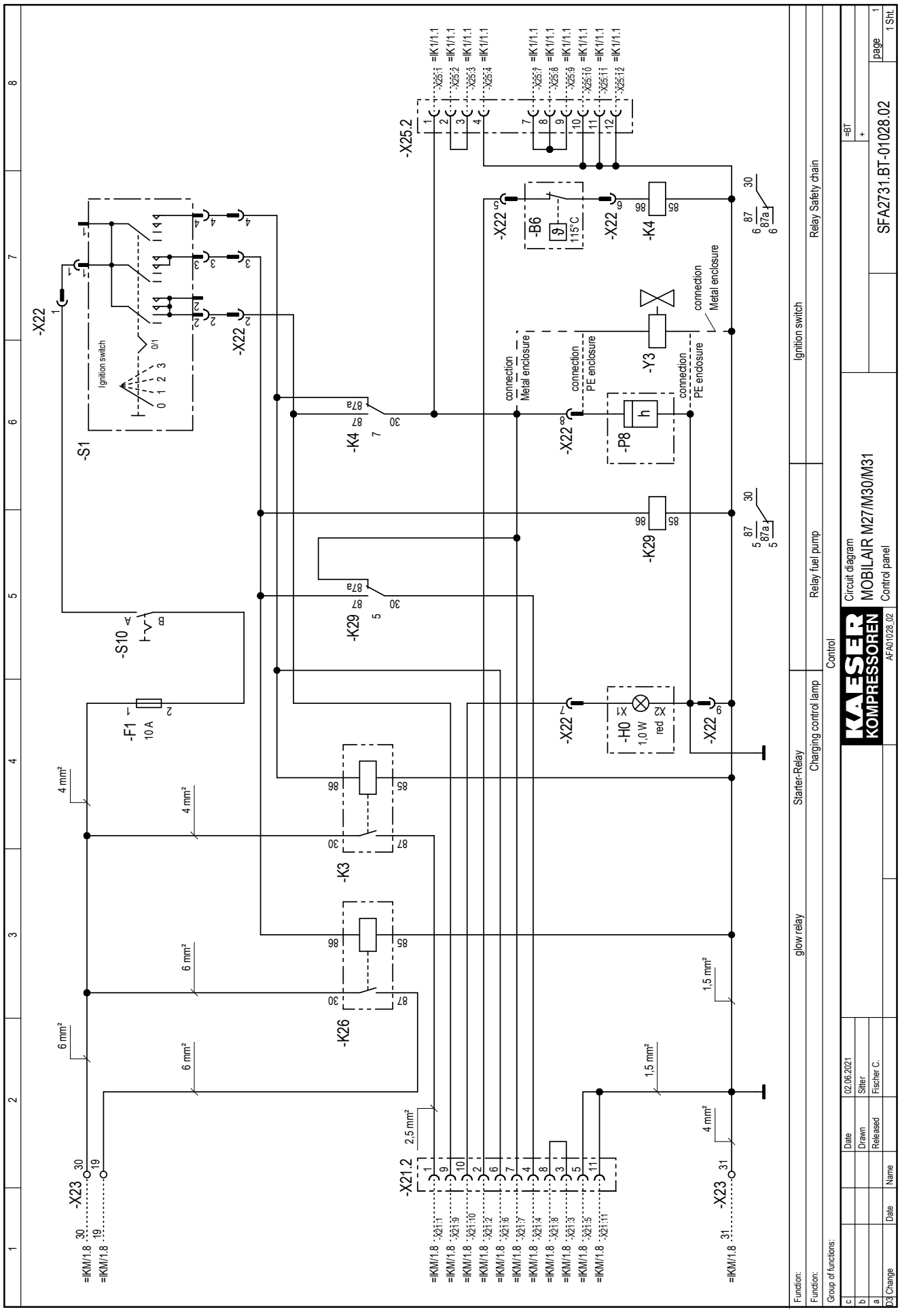
-S1
Ignition switch
-S10
-F1
10 A
-K3
-K4
-K26
-K29
-H0
1,0 W
red
-P8
h
-B6
115°C
-Y3
-X22
-X25.2
-X21.2
-X23
connection
Metal enclosure
connection
PE enclosure
Ignition switch
Relay Safety chain
Relay fuel pump
Charging control lamp
Starter-Relay
glow relay
Control
Function:
Function:
Group of functions:
Circuit diagram
MOBILAIR M27/M30/M31
Control panel
AFA01028.02
SFA2731.BT-01028.02
page 1
1 Sht.
Date
Drawn
Released
02.06.2021
Sitter
Fischer C.
Name
Change

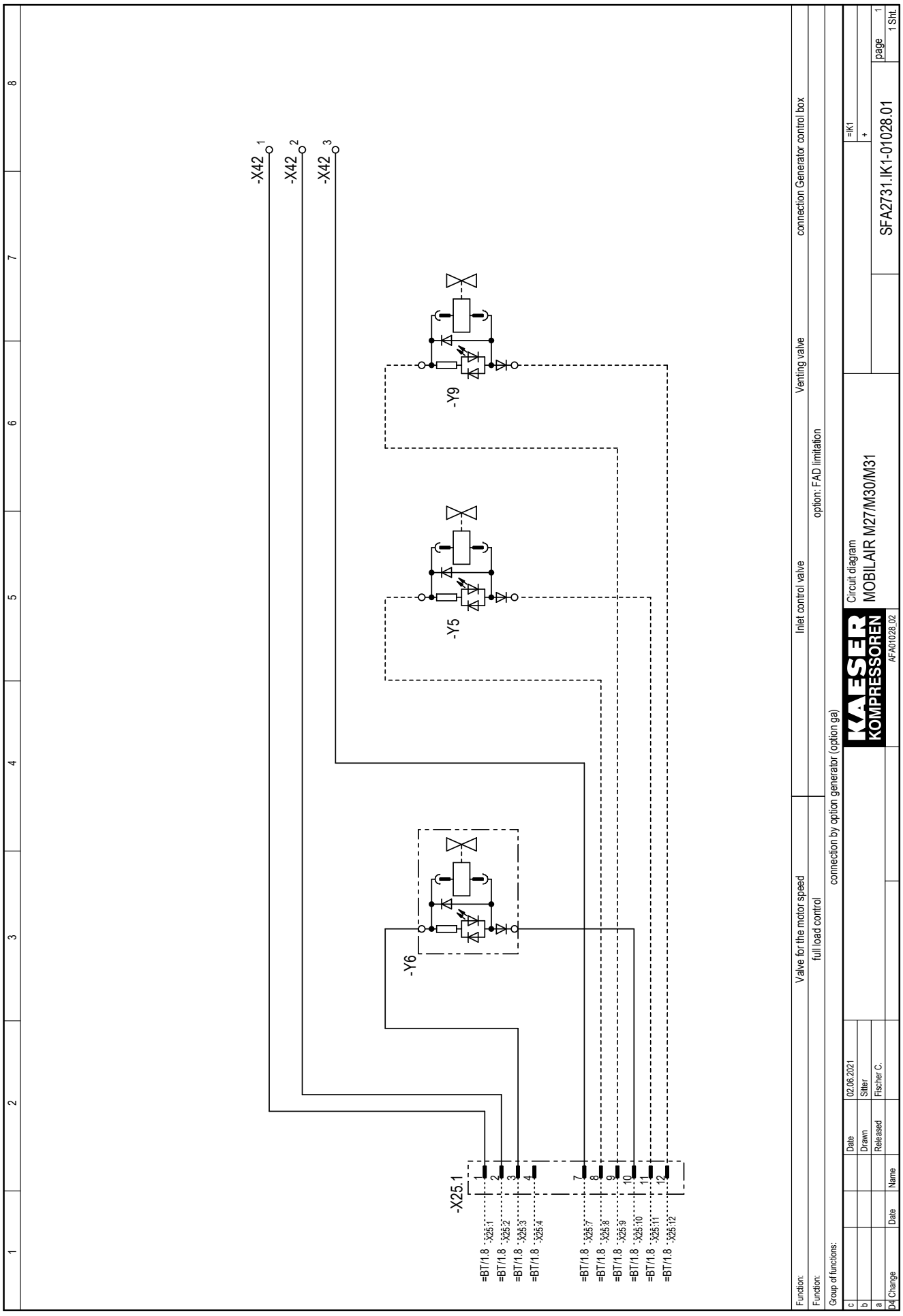
-X42 1
-X42 2
-X42 3
-Y9
-Y5
-Y6
-X25.1
=BT/1.8 -X25:1
=BT/1.8 -X25:2
=BT/1.8 -X25:3
=BT/1.8 -X25:4
=BT/1.8 -X25:7
=BT/1.8 -X25:8
=BT/1.8 -X25:9
=BT/1.8 -X25:10
=BT/1.8 -X25:11
=BT/1.8 -X25:12
Function: Valve for the motor speed
Function: full load control
Group of functions: connection by option generator (option ga)
Inlet control valve
Venting valve
connection Generator control box
option: FAD limitation
Date 02.06.2021
Drawn Sitter
Released Fischer C.
Circuit diagram
MOBILAIR M27/M30/M31
AFA01028_02
SFA2731.IK1-01028.01
=IK1
+
page 1
1 Sht.

1	2	3	4	5	6	7	8

A Stück-zahl Qty.	B Benennung und Verwendung Description and function	C Fabrikatsbezeichnung Typ; notwendige techn. Daten (z.B. Steuerspannung, Frequenz, Einstellbereich); Bestell-Nr.; Hersteller / Identification data Type; basic technical data (e.g. control voltage, frequency, adjustable range); order No.; manufacturer				D Lfd. Nr. Item	E Betriebsmittel-Kennz. nach DIN 40719, Teil 2 / Identifying symbol of device	F Stromlaufplan Planabschnitt / Circuit diagram sheet No.; section No.	G Einbauort / Location	Concerns only the manufacturer Wst.-Nr. H Schabl. Nr.	I BZ-Pos.	J VA Kz. *)	K Eingangs-vermerk
	components Control panel												
1	Ignition switch	47.14.08			7.2097.00020 KEYA		-S1						
1	Control voltage ON/OFF switch	26 00 00	12/24 V 15/7,5 A		8.7045.0 MERIT		-S10						
1	Indicator light red		12 V/red		7.9027.10200 SCHLEGEL		-H0						
1	Lamp	W2x4,6-12 V	12 V/1,0 W		8.7030.0 SCHLEGEL		-H0						
2	KFZ-Relay	20 204 073	12 V, 1S, 70 A		8.6544.00030 WEHRLE		-K25,-K26						
2	KFZ-Relay	20 201 100	12 V, 1W, 20/30 A		8.6544.0 WEHRLE		-K4,-K29						
4	Relay socket	10 485 008			7.3411.0 WEHRLE		-K4,-K25,-K26,-K29						
1	Fuse		10A	7.6407.00030+7.6407.00040	L&K		-F1						

Bei Nachbestellung von Geräten und Maschinen sind alle in den stark umrandeten aufzuführen. Die Daten in den Spalten D bis G sind zusätzlich unter Nennung anzugeben, soweit sie die Beantwortung technischer Rückfragen erleichtern. die Angabe der Serialnummer erforderlich, falls diese auf dem Typenschild des

In Zweifelsfällen gilt die deutsche Fassung.

Spalten B und C angegebenen Daten dieser Gerätestücklisten-Nummer Für Ersatzteilbestellung ist zusätzlich Erzeugnisses genannt ist.

When reordering the equipment, all data enclosed by the heavy lines of columns addition, the data in columns D to G should be given together with the No. of they ar helpful in answering technical enquiries. When ordering spare parts, product if stated on the rating plate.

The German version applies in cases of doubt.

B and C should be stated. In this list of equipment, insofar as also quote the serial No. of the

*) Versandanschrift - Kennzeichen

c			Date	02.06.2021	
b			Drawn	Sitter	
a			Released	Fischer C.	
F	Change	Date	Name		

KAESER KOMPRESSOREN

AFA01028_02

Equipment parts list
MOBILAIR M27/M30/M31

GFA2731-01028.03

=
+

page 1
1 Sht.

13.4.2 Option ga
Generator electrical diagram, 400V, 3-ph

Electrical diagrams

Synchronous generator

400V/3~/50Hz, 6,0 kVA

with Insulation monitoring

Manufacturer: KAESER KOMPRESSOREN SE
Postfach 2143
96410 Coburg

The drawings remain our exclusive property. They are entrusted only for the agreed purpose. Copies or any other reproductions, including storage, treatment and dissemination by use of electronic systems must not be made for any other than the agreed purpose. Neither originals nor reproductions must be forwarded or otherwise made accessible to third parties.

c				Date	06.08.2019 E	KAESER KOMPRESSOREN	Cover page	=	
b				Drawn	Sitter		GTS Synchronous generator	+	
a				Released	Fischer C.				
A	Change	Date	Name			AGE01002_00		DGEN06.4S4-01002.01	page 1 / 1 Sht.

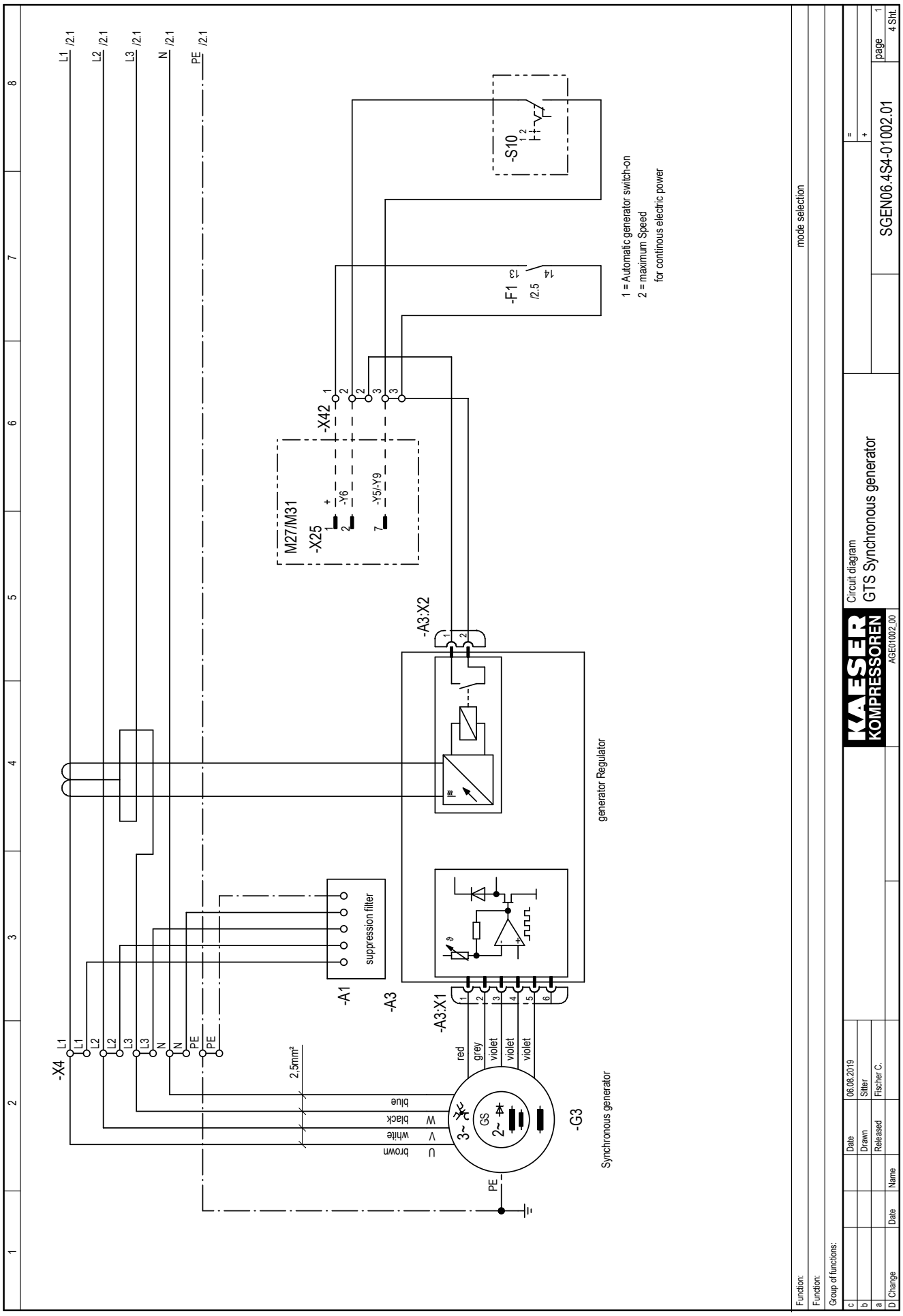
L1 /2.1
L2 /2.1
L3 /2.1
N /2.1
PE /2.1
-S10
-F1
/2.5
1 = Automatic generator switch-on
2 = maximum Speed
for continous electric power
-X42
M27/M31
-X25
-Y6
-Y5/-Y9
-A3:X2
mode selection
generator Regulator
suppression filter
-A1
-A3
-A3:X1
-X4
2,5mm²
red
grey
violet
violet
violet
blue
black
white
brown
U
V
W
GS
3~
2~
-G3
Synchronous generator
PE
Function:
Function:
Group of functions:
Date
Drawn
Released
06.08.2019
Sitter
Fischer C.
Name
Change
KAESER KOMPRESSOREN
AGE01002_00
Circuit diagram
GTS Synchronous generator
SGEN06.4S4-01002.01
page 1
4 Sht.

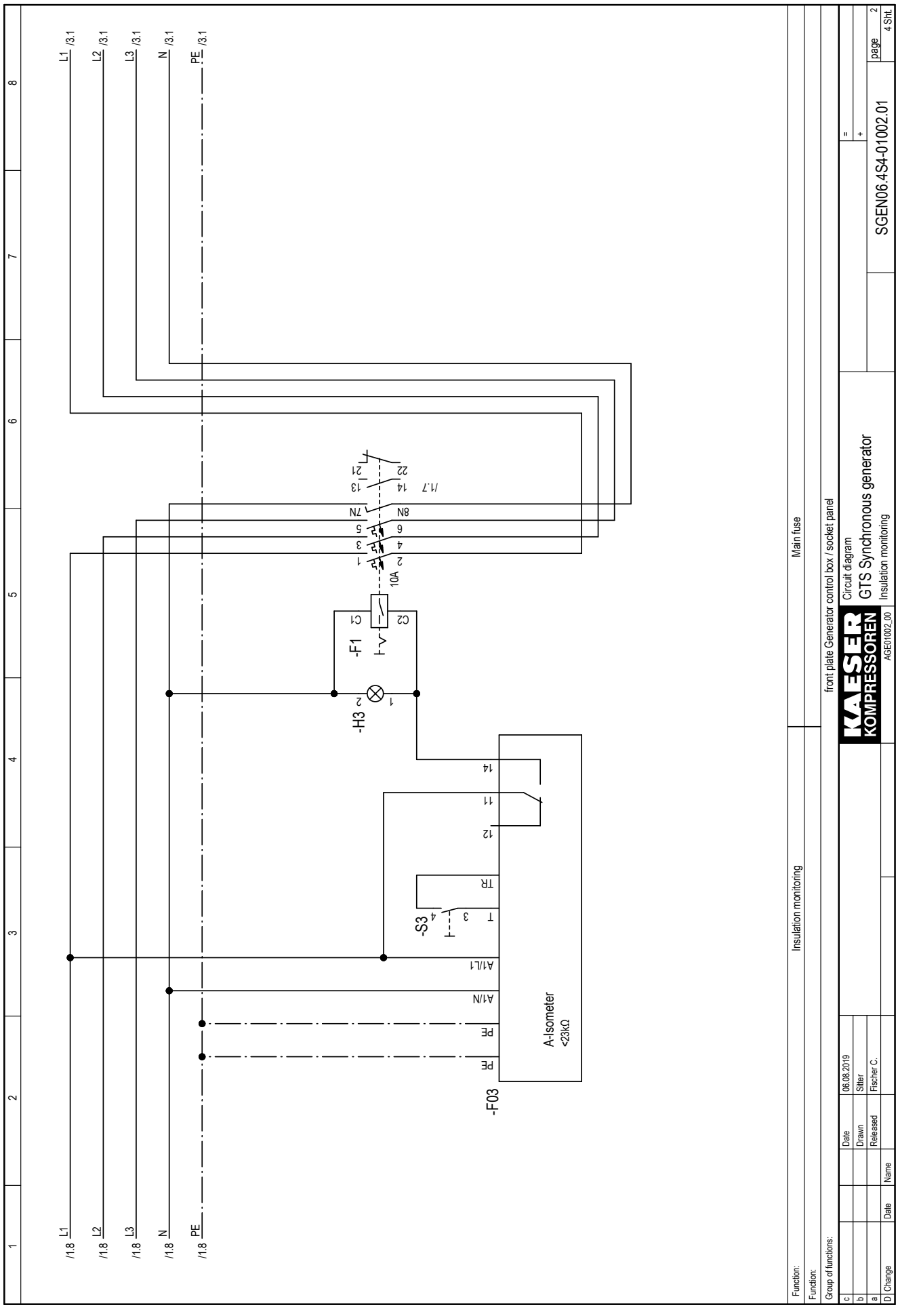
L1 /3.1
L2 /3.1
L3 /3.1
N /3.1
PE /3.1
/1.7
13 14
21 22
7N 8N
5 6
3 4
1 2
10A
-F1
C1 C2
-H3
2 1
14
11
12
TR
-S3
4 3
T
A1/L1
A1/N
PE
PE
A-Isometer
<23kΩ
-F03
L1 /1.8
L2 /1.8
L3 /1.8
N /1.8
PE /1.8
Function: Insulation monitoring
Function: Main fuse
Group of functions: front plate Generator control box / socket panel
Date Name
Drawn 06.08.2019 Sitter
Released Fischer C.
D Change
KAESER KOMPRESSOREN AGE01002_00
Circuit diagram
GTS Synchronous generator
Insulation monitoring
SGEN06.4S4-01002.01
page 2
4 Sht.

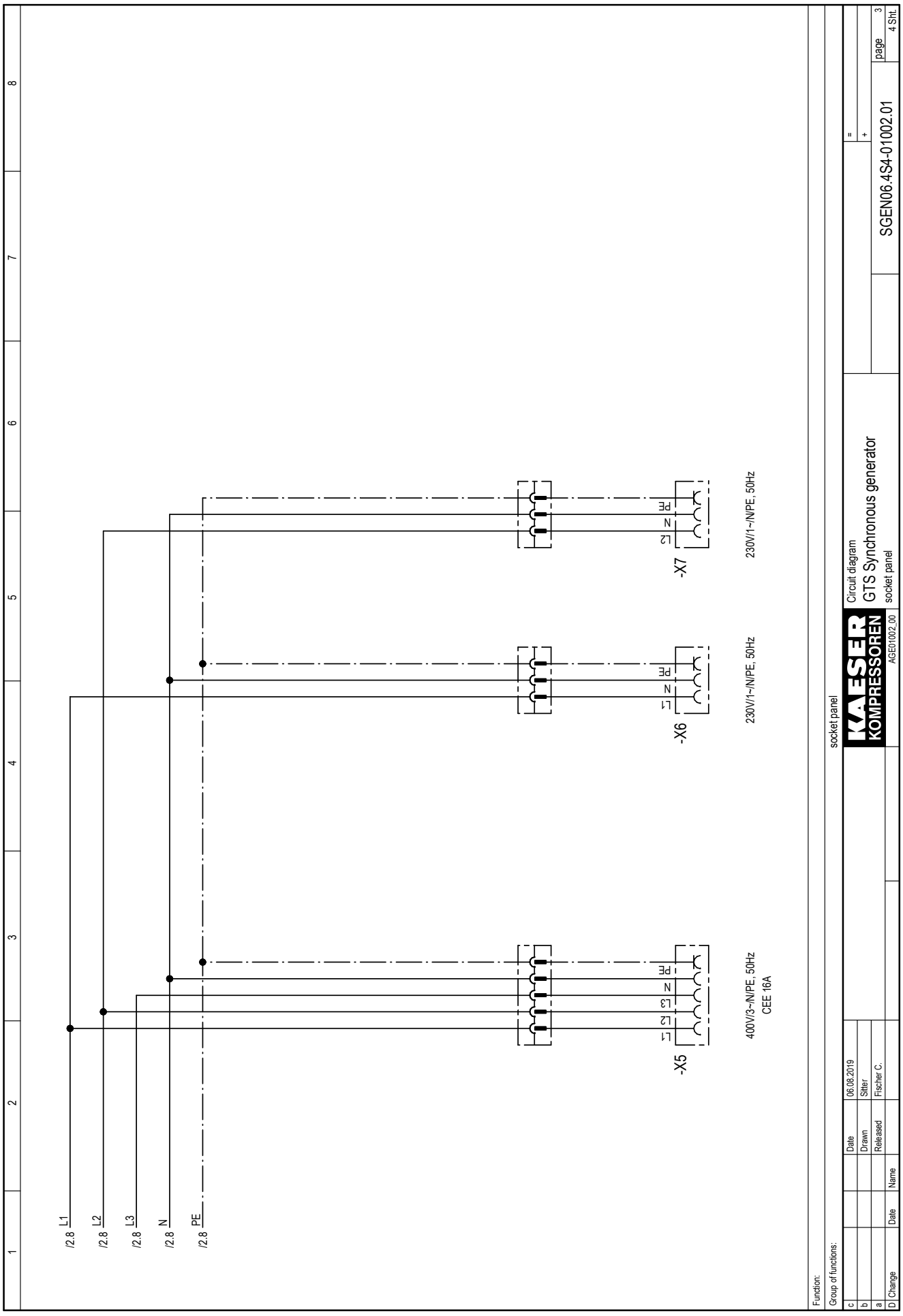
L1
L2
L3
N
PE
/2.8
-X5
400V/3~/N/PE, 50Hz
CEE 16A
-X6
230V/1~/N/PE, 50Hz
-X7
230V/1~/N/PE, 50Hz
socket panel
Function:
Group of functions:
Date
Drawn
Released
06.08.2019
Slitter
Fischer C.
Name
Change
KAESER KOMPRESSOREN
AGE01002_00
Circuit diagram
GTS Synchronous generator
socket panel
SGEN06.4S4-01002.01
page 3
4 Sht.

-A1	suppression filter
-A3	generator-Regulator
-F1	Cut-out with overcurrent release
-F03	Insulation monitoring
-G3	generator
-H03	earth leakage lamp
-S3	Test button, Insulation monitoring
-S10	Selector switch
-X4	connection generator
-X5	Socket outlet 400V/3~/N/PE, 50Hz
-X6,-X7	Socket outlet 230V/1~/N/PE,50Hz
-X42	Terminal strip, Valve interference suppression

c				Date	06.08.2019	KAESER KOMPRESSOREN	Block diagram	=	
b				Drawn	Sitter		GTS Synchronous generator	+	
a				Released	Fischer C.			SGEN06.4S4-01002.01	page 01
E	Change	Date	Name			AGE01002_00			4 Sht.

13.4.3 Option ga
Generator electrical diagram, 115 V, 2-ph

Electrical diagrams
Synchronous generator
115V/2~/50Hz, 6,0 kVA
with Insulation monitoring

Manufacturer: Kaeser Kompressoren GmbH
Postfach 2143
96410 Coburg

The drawings remain our exclusive property. They are entrusted only for the agreed purpose. Copies or any other reproductions, including storage, treatment and dissemination by use of electronic systems must not be made for any other than the agreed purpose. Neither originals nor reproductions must be forwarded or otherwise made accessible to third parties.

c				Datum	16.05.2012 E		KAESER KOMPRESSOREN	Cover page GTS Synchronous generator	=
b				Bearb.	Weid				+
a				Gepr.	Weid				
A	Änderung	Datum	Name	Norm		Ersatz durch:	Ersatz für:	Ursprung: AGE00935_00	DGEN06.1S2-00935.01 Blatt 1 Bl.

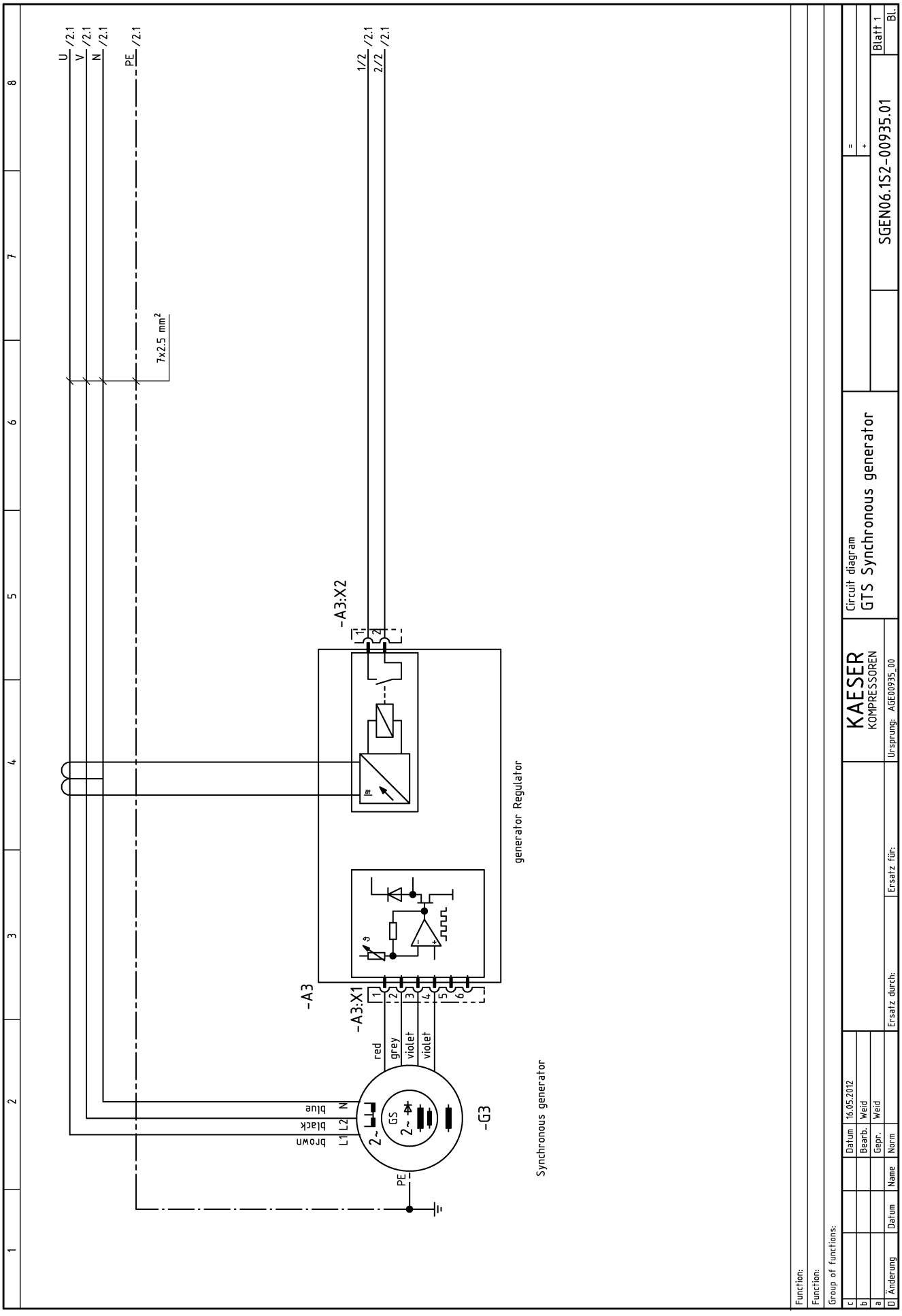
U /2.1
V /2.1
N /2.1
PE /2.1
7x2.5 mm²
1/2 /2.1
2/2 /2.1
-A3:X2
-A3
-A3:X1
generator Regulator
red
grey
violet
violet
brown
black
blue
L1
L2
N
PE
-G3
Synchronous generator
Function:
Function:
Group of functions:
KAESER KOMPRESSOREN
Circuit diagram
GTS Synchronous generator
SGEN06.1S2-00935.01
Blatt 1
Datum 16.05.2012
Bearb. Weid
Gepr. Weid
Norm
Name
Datum
Änderung
Ersatz durch:
Ersatz für:
Ursprung: AGE00935_00

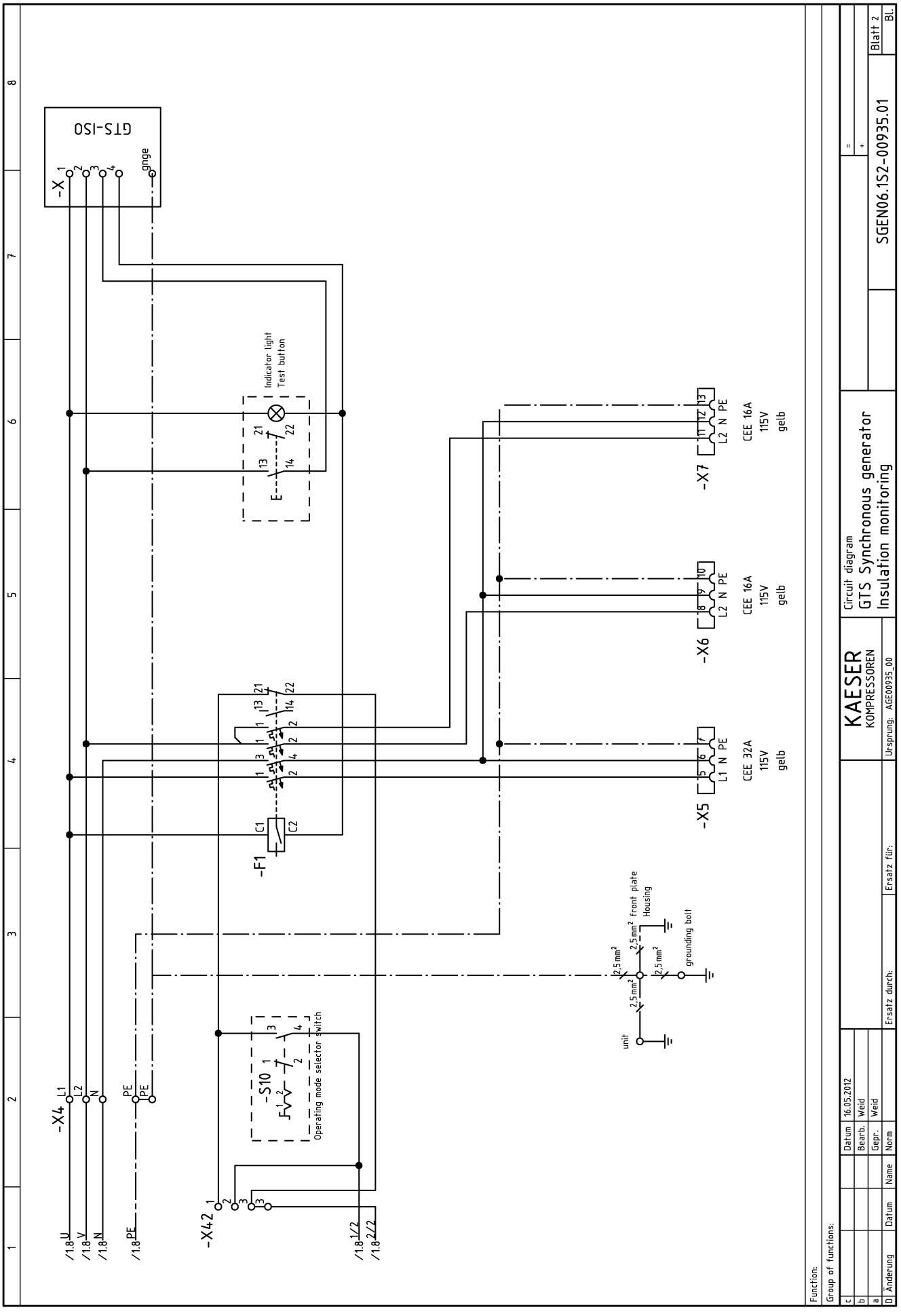
GTS-ISO
-X
gnge
Indicator light
Test button
-X7
-X6
-X5
CEE 16A
CEE 32A
115V
gelb
L2 N PE
L1 N PE
-F1
-X4
L1
L2
N
PE
-S10
Operating mode selector switch
-X42
/1.8 U
/1.8 V
/1.8 N
/1.8 PE
/1.8 1/2
/1.8 2/2
2.5mm² front plate
Housing
grounding bolt
unit
KAESER KOMPRESSOREN
Circuit diagram
GTS Synchronous generator
Insulation monitoring
SGEN06.1S2-00935.01
Blatt 2
Bl.
Function:
Group of functions:
Datum 16.05.2012
Bearb. Weid
Gepr. Weid
Norm
Name
Datum
Änderung
Ersatz durch:
Ersatz für:
Ursprung: AGE00935_00

1	2	3	4	5	6	7	8

-A3	generator-Regulator
-F1	Cut-out with overcurrent release
-F03	Insulation monitoring
-G3	generator
-H03	Earth leak lamp
-S3	Test button, Insulation monitoring
-S10	Selector switch
-X4	connection generator
-X5	Socket outlet 115V/1~/N/PE, 50Hz, 32A
-X6,-X7	Socket outlet 115V/1~/N/PE, 50Hz, 16A
-X42	Terminal strip, Valve interference suppression

c				Datum	16.05.2012		KAESER KOMPRESSOREN	Electrical equipment identification GTS Synchronous generator	=
b				Bearb.	Weid				+
a				Gepr.	Weid				Blatt 01
E	Änderung	Datum	Name	Norm		Ersatz durch: / Ersatz für:	Ursprung: AGE00935_00	SGEN06.1S2-00935.01	Bl.

13.4.4 Option tc
Lighting and signaling system connection

1	2	3	4	5	6	7	8

Electrical diagrams
MOBILAIR M27/M31
Lighting equipment
connection 12V/13-pole

Manufacturer: Kaeser Kompressoren GmbH
Postfach 2143
96410 Coburg

The drawings remain our exclusive property. They are entrusted only for the agreed purpose. Copies or any other reproductions, including storage, treatment and dissemination by use of electronic systems must not be made for any other than the agreed purpose. Neither originals nor reproductions must be forwarded or otherwise made accessible to third parties.

c				Datum	23.09.2011 E		KAESER KOMPRESSOREN	Cover page MOBILAIR M27/M31 Lighting equipment	=
b				Bearb.	Weid				+
a				Gepr.	Weid				
D	Änderung	Datum	Name	Norm		Ersatz durch:	Ursprung: AFA02005_01	DFA2731.BEL-02008.00	Blatt 1 Bl.

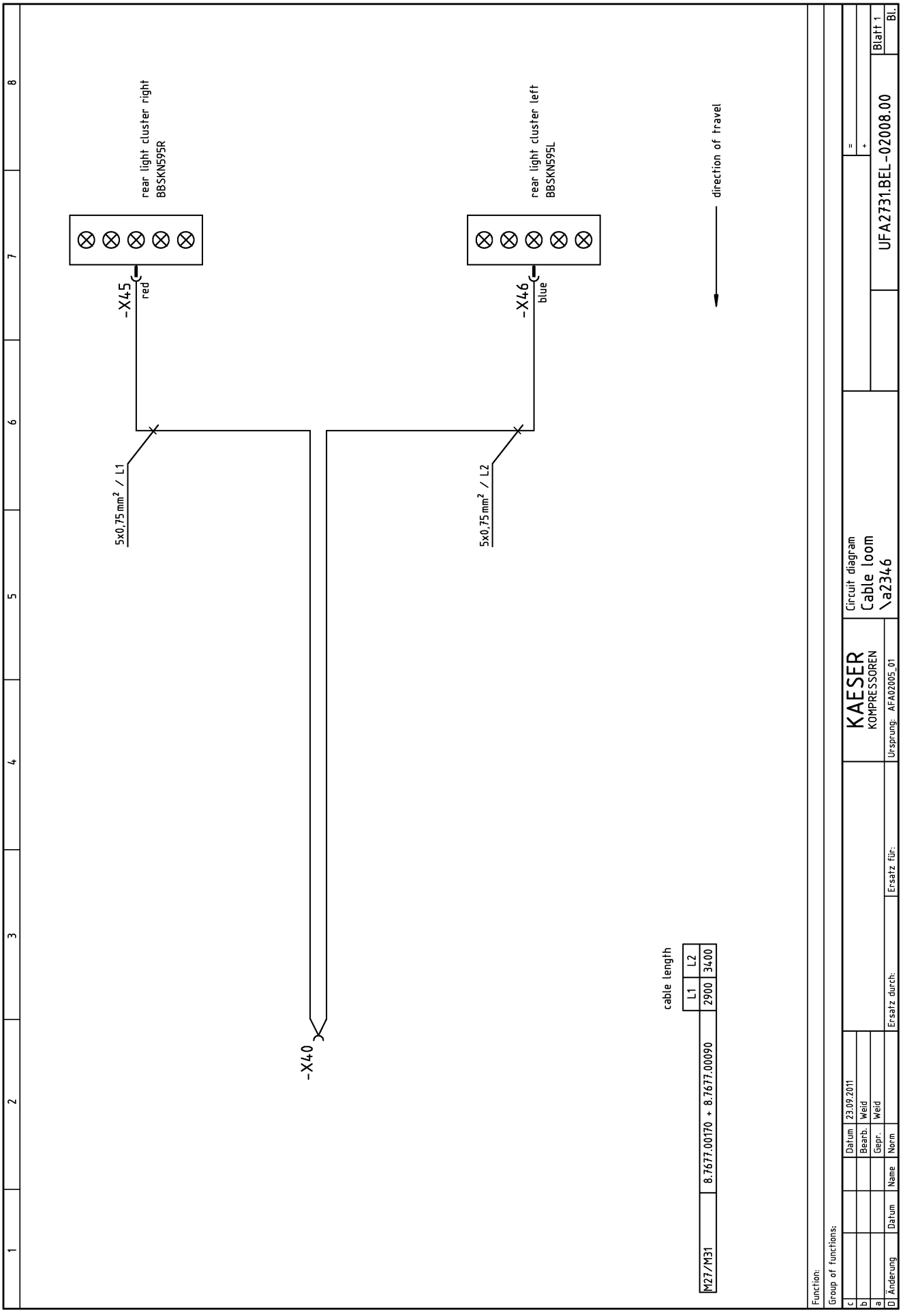
rear light cluster right
BBSKN595R
rear light cluster left
BBSKN595L
direction of travel
-X45
red
-X46
blue
5x0,75 mm² / L1
5x0,75 mm² / L2
-X40
cable length
L1
L2
M27/M31
8.7677.00170 + 8.7677.00090
2900
3400
KAESER KOMPRESSOREN
Circuit diagram
Cable loom
\a2346
UFA2731.BEL-02008.00
Blatt 1
Bl.
Ursprung: AFA02005_01
Ersatz für:
Ersatz durch:
Datum 23.09.2011
Bearb. Weid
Gepr. Weid
Norm
Name
Datum
Änderung
Function:
Group of functions:

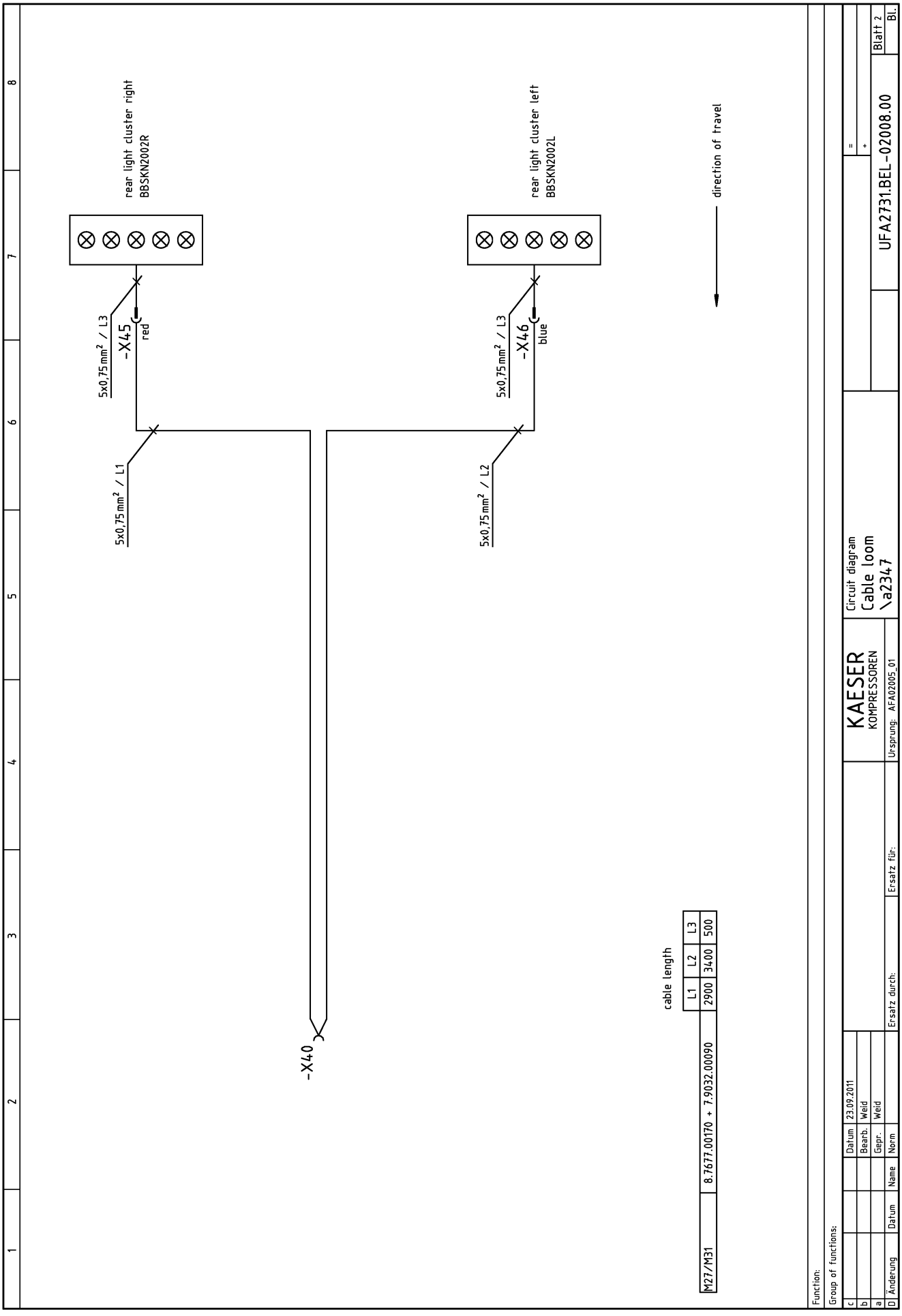
rear light cluster right
BBSKN2002R
rear light cluster left
BBSKN2002L
direction of travel
5x0,75 mm² / L3
-X45
red
5x0,75 mm² / L3
-X46
blue
5x0,75 mm² / L1
5x0,75 mm² / L2
-X40
cable length
L1 L2 L3
2900 3400 500
M27/M31
8.7677.00170 + 7.9032.00090
KAESER KOMPRESSOREN
Circuit diagram
Cable loom
\a2347
UFA2731.BEL-02008.00
Blatt 2
Function:
Group of functions:
Datum 23.09.2011
Bearb. Weid
Gepr. Weid
Name
Norm
Ersatz durch:
Ersatz für:
Ursprung: AFA02005_01
Änderung Datum Name

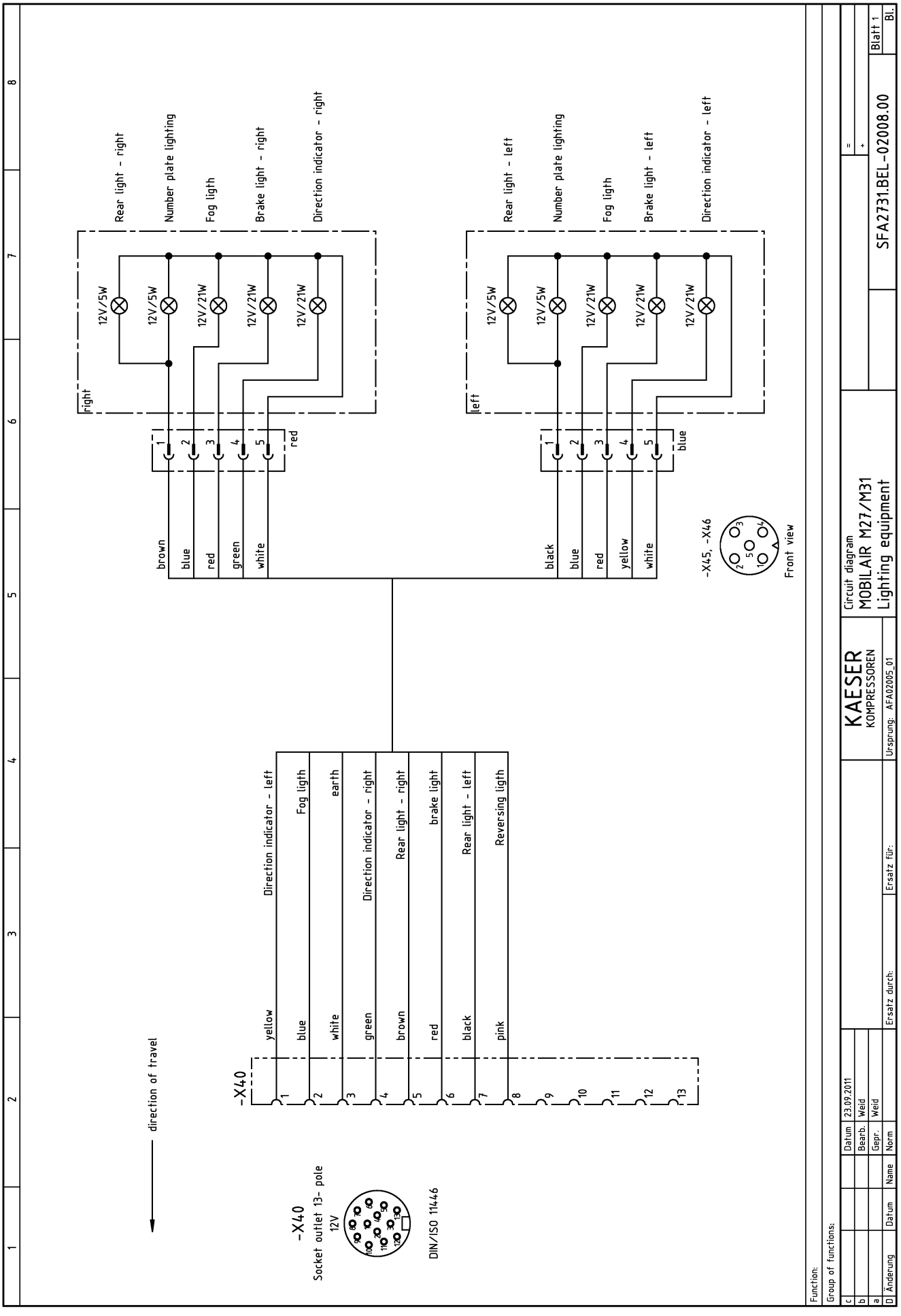
Rear light - right
Number plate lighting
Fog ligth
Brake light - right
Direction indicator - right
12V/5W
12V/5W
12V/21W
12V/21W
12V/21W
right
1
2
3
4
5
red
brown
blue
red
green
white
Rear light - left
Number plate lighting
Fog ligth
Brake light - left
Direction indicator - left
12V/5W
12V/5W
12V/21W
12V/21W
12V/21W
left
1
2
3
4
5
blue
black
blue
red
yellow
white
-X45, -X46
Front view
direction of travel
-X40
1 yellow Direction indicator - left
2 blue Fog ligth
3 white earth
4 green Direction indicator - right
5 brown Rear light - right
6 red brake light
7 black Rear light - left
8 pink Reversing ligth
9
10
11
12
13
-X40
Socket outlet 13- pole
12V
DIN/ISO 11446
Function:
Group of functions:
Datum 23.09.2011
Bearb. Weid
Gepr. Weid
Norm
Ersatz durch:
Ersatz für:
Ursprung: AFA02005_01
KAESER KOMPRESSOREN
Circuit diagram
MOBILAIR M27/M31
Lighting equipment
SFA2731.BEL-02008.00
Blatt 1
Bl.
Änderung
Datum
Name

13.4.5 Option te
Lighting and signaling system connection

Electrical diagrams
MOBILAIR
Lighting equipment
for USA / CAN

Manufacturer: Kaeser Kompressoren GmbH
Postfach 2143
96410 Coburg

The drawings remain our exclusive property. They are entrusted only for the agreed purpose. Copies or any other reproductions, including storage, treatment and dissemination by use of electronic systems must not be made for any other than the agreed purpose. Neither originals nor reproductions must be forwarded or otherwise made accessible to third parties.

c				Datum	04.07.08 E		KAESER KOMPRESSOREN	Cover page MOBILAIR Lighting equipment	=
b				Bearb.	Weid				+
a				Gepr.	Weid				
D	Änderung	Datum	Name	Norm		Ersatz durch:	Ursprung: AFA00909_00	DFAUSA.BEL-02004.00	Blatt 1 Bl.

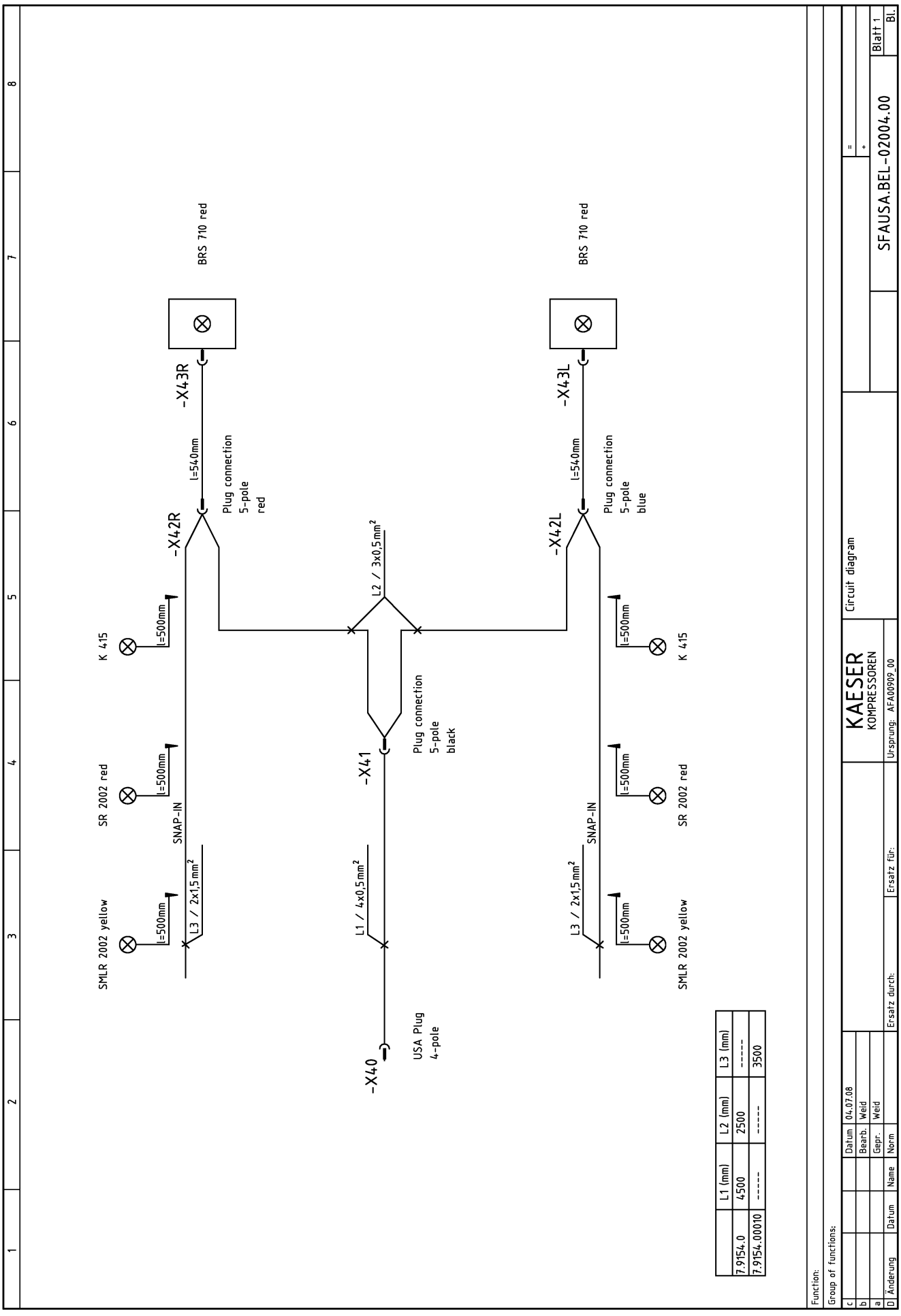
BRS 710 red
-X43R
l=540mm
Plug connection
5-pole
red
-X42R
L2 / 3x0,5mm²
K 415
l=500mm
SR 2002 red
SNAP-IN
L3 / 2x1,5mm²
SMLR 2002 yellow
-X41
Plug connection
5-pole
black
L1 / 4x0,5mm²
-X40
USA Plug
4-pole
BRS 710 red
-X43L
l=540mm
Plug connection
5-pole
blue
-X42L
K 415
SR 2002 red
SNAP-IN
SMLR 2002 yellow
L1 (mm) L2 (mm) L3 (mm)
7.9154.0 4500 2500 -----
7.9154.00010 ----- ----- 3500
Function:
Group of functions:
KAESER KOMPRESSOREN
Circuit diagram
SFAUSA.BEL-02004.00
Blatt 1
Bl.
Datum 04.07.08
Bearb. Weid
Gepr. Weid
Norm
Name
Datum
Änderung
Ersatz durch:
Ersatz für:
Ursprung: AFA00909_00

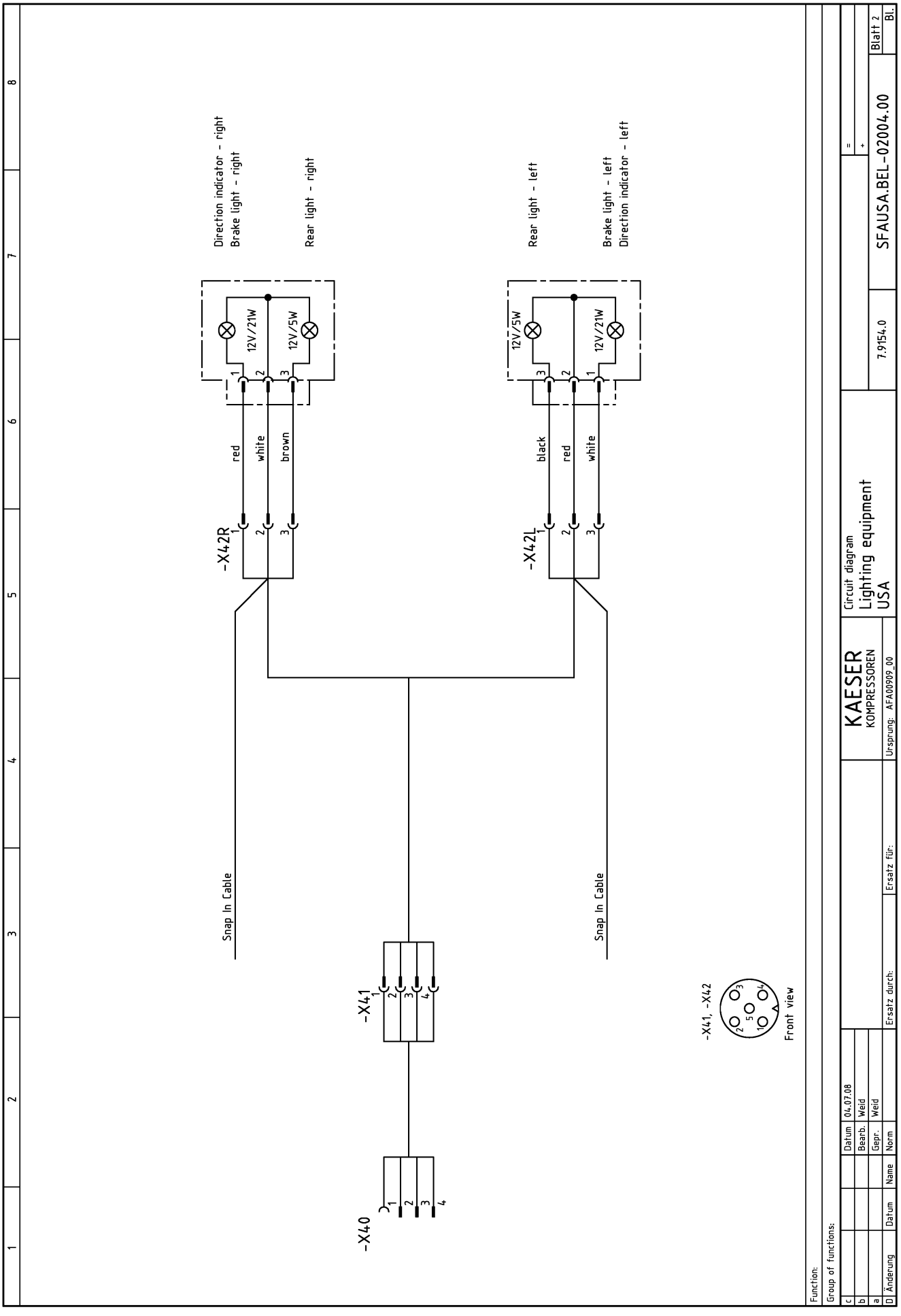
Direction indicator - right
Brake light - right
Rear light - right
12V/21W
12V/5W
red
white
brown
-X42R
Snap In Cable
Rear light - left
Brake light - left
Direction indicator - left
12V/5W
12V/21W
black
red
white
-X42L
Snap In Cable
-X41
-X40
-X41, -X42
Front view
Function:
Group of functions:
Datum 04.07.08
Bearb. Weid
Gepr. Weid
Norm
Ersatz durch:
Ersatz für:
Ursprung: AFA00909_00
KAESER KOMPRESSOREN
Circuit diagram
Lighting equipment
USA
7.9154.0
SFAUSA.BEL-02004.00
Blatt 2
Änderung
Datum
Name

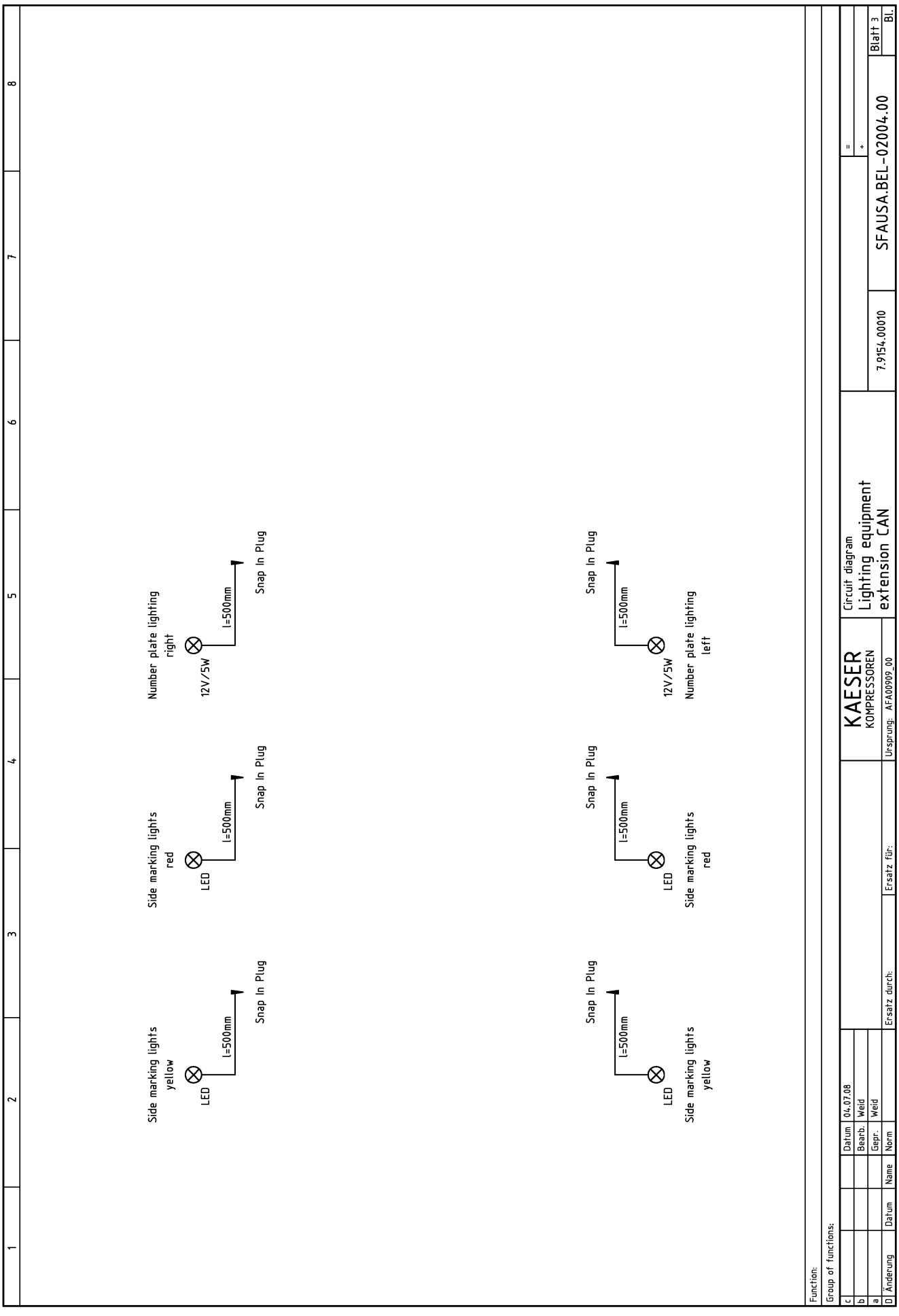
Side marking lights
yellow
LED
l=500mm
Snap In Plug
Side marking lights
red
LED
l=500mm
Snap In Plug
Number plate lighting
right
12V/5W
l=500mm
Snap In Plug
Snap In Plug
l=500mm
LED
Side marking lights
yellow
Snap In Plug
l=500mm
LED
Side marking lights
red
Snap In Plug
l=500mm
12V/5W
Number plate lighting
left
Function:
Group of functions:
KAESER KOMPRESSOREN
Circuit diagram
Lighting equipment
extension CAN
7.9154.00010
SFAUSA.BEL-02004.00
Blatt 3
Datum 04.07.08
Bearb. Weid
Gepr. Weid
Norm
Name
Datum
Änderung
Ersatz durch:
Ersatz für:
Ursprung: AFA00909_00

13.5 Fuel circulation diagram

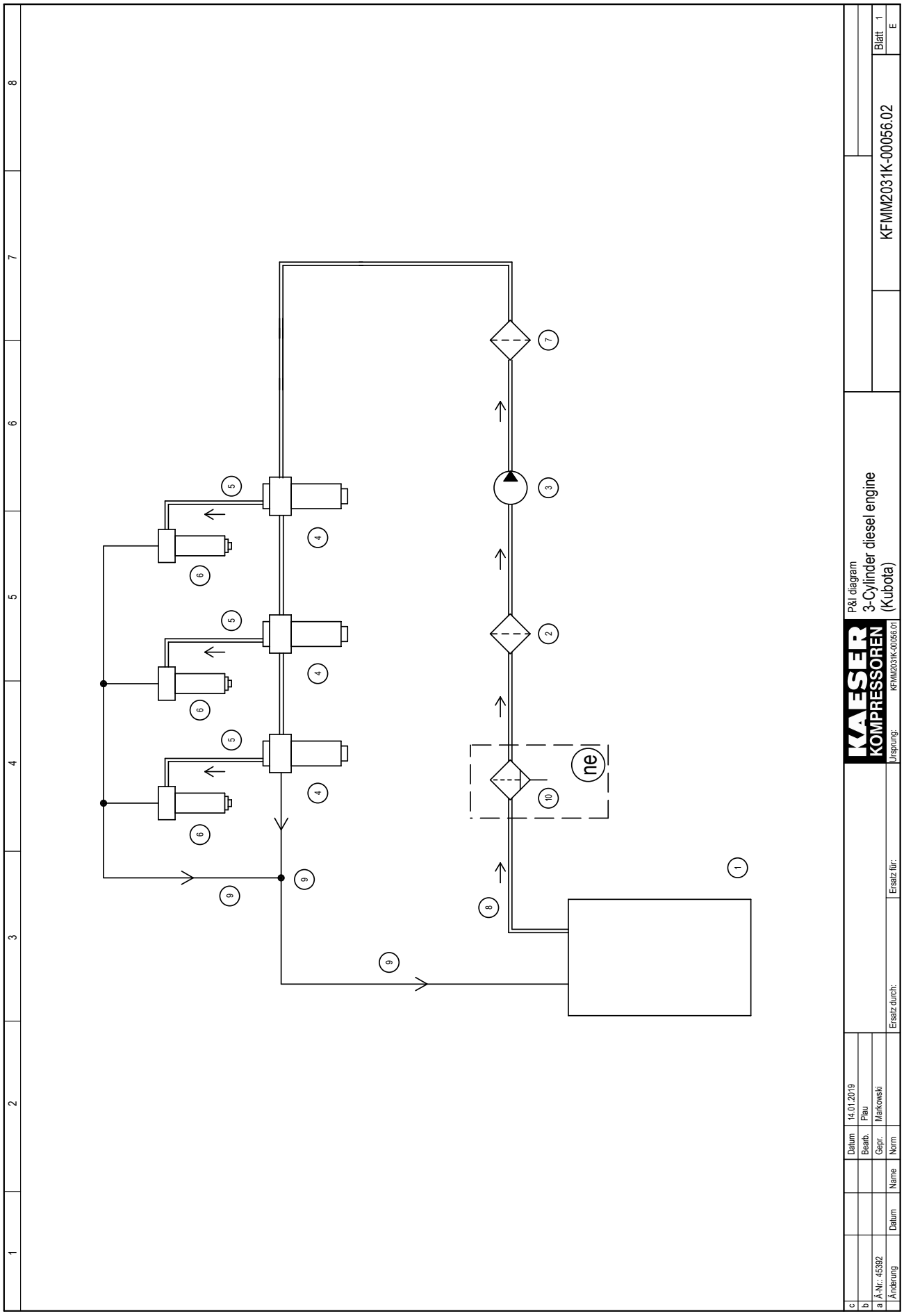
P&I diagram
3-Cylinder diesel engine
(Kubota)
KFMM2031K-00056.02
KAESER KOMPRESSOREN
Ursprung: KFMM2031K-00056.01
Ersatz durch:
Ersatz für:
Datum 14.01.2019
Bearb. Pfau
Gepr. Markowski
Norm
Name
Datum
Änderung
A-Nr.: 45392
Blatt 1
E
ne

1	Fuel tank	7	Fuel filter
2	Fuel prefilter	8	Fuel supply line
3	Fuel feed pump	9	Fuel return line
4	Injection pump	10	Fuel/water separator
5	Injection pipe	Option	
6	Injector nozzle	ne	Fuel/water separator

c				Datum	14.01.2019		KAESER KOMPRESSOREN	P&I diagram legend	
b				Bearb.	Plau			3-Cylinder diesel engine (Kubota)	
a				Gepr.	Markowski				
	Änderung	Datum	Name	Norm		Ersatz durch:	Ersatz für:	Ursprung: KFMM2031K-00056.01	KFMM2031K-00056.02 Blatt 2 E

13.6 Special version fuel circuit

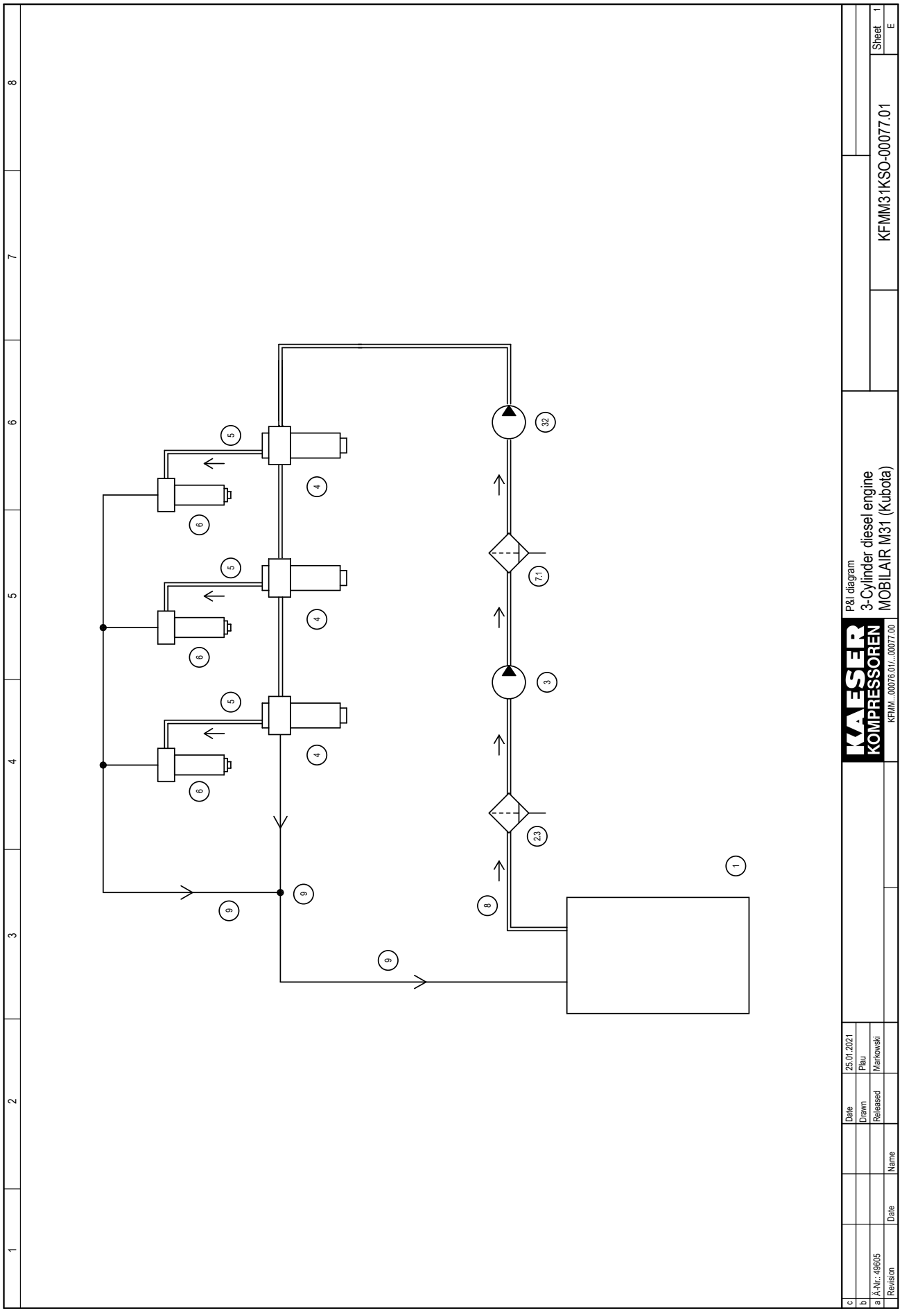
P&I diagram
3-Cylinder diesel engine
MOBILAIR M31 (Kubota)
KFMM31KSO-00077.01
KFMM..00076.01/..00077.00
Sheet 1
E
Date
Drawn
Released
25.01.2021
Plau
Markowski
Name
Date
Revision
A-Nr.: 49605

1	2	3	4	5	6	7	8

1	Fuel tank	6	Injector nozzle
2.3	Fuel prefilter with integrated water separator	7.1	Fuel filter with integrated water separator
3	Fuel feed pump	8	Fuel supply line
4	Injection pump	9	Fuel return line
5	Injection pipe	32	High-pressure pump

c				Date	25.01.2021	KAESER KOMPRESSOREN	P&I diagram legend		
b				Drawn	Plau		3-Cylinder diesel engine		
a				Released	Markowski		MOBILAIR M31 (Kubota)	KFMM31KSO-00077.01	Sheet 2
	Revision	Date	Name			KFMM...00076.01/...00077.00			E

13.7 Option ga
Maintenance tasks for the generator

In order to ensure a safe operation of the machine, the generator must be inspected once every year by a trained and authorized electrician.

Have the following tasks performed by a specialist electrician or an authorized KAESER service representative:

- Inspection of the generator and generator control cubicle for mechanical damages.
- Inspection of the protective conductor.
- Measurement of the dielectric resistance.
- Measurement of the substitute leakage current.
- Inspection of generator functionality.
- Inspection of the proper functioning of the generator fan and cleaning, if required.
- Cleaning the cooling air apertures.
- Check all screwed connections on the generator and control box and tighten if necessary.
- Check covers and power socket caps for damage and good sealing.
- Check that all warning and other labels are complete and undamaged.

13.8 Option dd
Operating instructions for compressed air filter (combination filter)

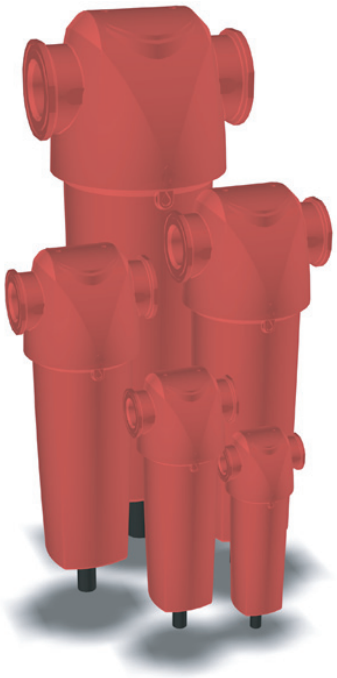

Filters for Compressed Air

005-055 (AO, AA, ACS, AR, AAR)

EN Original Language

NL DE FR FI SV NO DA EL ES PT IT PL

SK CS ET HU LV LT RU SL TR MT RO

aerospace
climate control
electromechanical
filtration
fluid & gas handling
hydraulics
pneumatics
process control
sealing & shielding

Parker domnick hunter

ENGINEERING YOUR SUCCESS.

FILTER DH-OIL-X EVO AO AA 01-

FILTER DH-OIL-X EVO AO AA 01-

Warning

- Highlights actions or procedures, which if not performed correctly, may lead to personal injury or death.
- Benadrukt de acties of procedures die, indien niet juist uitgevoerd, lichamelijk letsel of de dood kunnen veroorzaken.
- Weist auf Aktionen oder Verfahren hin, die bei fehlerhafter Durchführung zu Verletzungen und tödlichen Unfällen führen können.
- Met en relief les actions ou procédures qui, si elles ne sont pas exécutées correctement, peuvent entraîner des dommages corporels ou la mort.
- Osoittaa toimenpiteitä tai menettelytapoja, jotka väärin suoritettuina saattavat aiheuttaa henkilövahingon tai kuoleman.
- Anger åtgärder och metoder som kan orsaka personskador eller dödsfall om de inte utförs korrekt.
- Fremhever handlinger eller prosedyrer som kan føre til personskade eller dødsfall hvis de ikke utføres på korrekt måte.
- Fremhæver handlinger eller fremgangsmåder, som kan medføre personskade eller dødsfald, hvis de ikke udføres korrekt.
- Επισημαίνει τις ενέργειες ή τις διαδικασίες, οι οποίες αν δεν πραγματοποιηθούν σωστά, μπορεί να οδηγήσουν σε τραυματισμό προσωπικού ή σε θάνατο
- Destaca acciones o procedimientos que, de no realizarse correctamente, pueden ocasionar daños personales o la muerte.
- Realça as acções ou procedimentos que, se não forem executados correctamente, poderão provocar danos pessoais ou morte.
- Segnala azioni o procedure che, se non eseguite correttamente, comportano il rischio di infortuni o morte.
- Wskazuje działania i procedury, które w razie niewłaściwego wykonania mogą prowadzić do obrażeń ciała lub śmierci.
- Zvýrazňuje činnosti alebo postupy, ktoré môžu v prípade nesprávneho vykonania viesť zraneniu alebo usmrteniu.
- Upozornění na činnosti nebo postupy, jejichž nesprávné provádění může vést ke zranění nebo usmrcení osob.
- Tõstab esile toimingud või protseduurid, mis väära teostamise korral võivad põhjustada kehavigastusi või surma.
- Olyan műveleteket vagy eljárásokat jelöl, amelyek nem megfelelő módon történő végrehajtása súlyos vagy végzetes személyi sérülést okozhat.
- Uzsver darbības vai procedūras, kuru rezultātā, ja tās neveic pareizi, var izraisīt ievainojumus vai nāvi.
- Žymi veiksmus ar procedūras, kuriuos atlikus neteisingai, galima susižeisti ar mirti.
- Указывает на действия, ненадлежащее выполнение которых может привести к нанесению вреда здоровью или смерти
- Označuje dejanja ali postopke, ki lahko ob nepravilnem izvajanju poškodujejo človeka ali povzročijo smrt.
- Doğru bir şekilde yerine getirilmediği takdirde bu ürüne hasar verebilecek işlem ve süreçleri vurgular.
- Tissottolinea l-azzjonijiet jew il-proċeduri, li jekk ma jsirux kif suppost, jista' jkun hemm korriment jew mewt
- Evidențiază acțiuni sau proceduri care, dacă nu sunt corect efectuate, pot duce la leziuni personale sau la deces.

Caution

- Highlights actions or procedures, which if not performed correctly, may lead to damage to this product.
- Benadrukt de acties of procedures die, indien niet juist uitgevoerd, schade kunnen berokkenen aan dit product.
- Weist auf Aktionen oder Verfahren hin, die bei fehlerhafter Durchführung zu Schäden am Gerät führen können.
- Met en relief les actions ou procédures qui, si elles ne sont pas exécutées correctement, peuvent endommager ce produit.
- Osoittaa toimenpiteitä tai menettelytapoja, jotka väärin suoritettuina saattavat vaurioittaa tätä laitetta.
- Anger åtgärder och metoder som kan orsaka skador på den här produkten om de inte utförs korrekt.
- Fremhever handlinger eller prosedyrer som kan føre til skade på produktet hvis de ikke utføres på korrekt måte.
- Fremhæver handlinger eller fremgangsmåder, som kan medføre beskadigelse af dette produkt, hvis de ikke udføres korrekt.
- Επισημαίνει τις ενέργειες ή τις διαδικασίες, οι οποίες αν δεν πραγματοποιηθούν σωστά, μπορεί να προκαλέσουν ζημιά στο προϊόν αυτό
- Destaca acciones o procedimientos que, de no realizarse correctamente, pueden ocasionar el deterioro del producto.
- Realça as acções ou procedimentos que, se não forem executados correctamente, poderão danificar este produto.
- Segnala azioni o procedure che, se non eseguite correttamente, comportano il rischio di danneggiare il prodotto.
- Wskazuje działania i procedury, które w razie niewłaściwego wykonania mogą powodować uszkodzenie produktu.
- Zvýrazňuje činnosti alebo postupy, ktoré v prípade nesprávneho vykonania môžu viesť k poškodeniu tohto výrobku.
- Upozornění na činnosti nebo postupy, jejichž nesprávné provádění může vést k poškození tohoto výrobku.
- Tõstab esile toimingud või protseduurid, mis väära teostamise korral võivad käesolevat toodet kahjustada.
- Olyan műveleteket vagy eljárásokat jelöl, amelyek nem megfelelő módon történő végrehajtása a termék károsodásához vezethet.
- Uzsver darbības vai procedūras, kuru rezultātā, ja tās neveic pareizi, var sabojāt šo izstrādājumu.
- Žymi veiksmus ar procedūras, kuriuos atlikus neteisingai, galima sugadinti šį gaminį.
- Указывает на действия, ненадлежащее выполнение которых может привести к повреждениям данного изделия
- Označuje dejanja ali postopke, ki lahko ob nepravilnem izvajanju poškodujejo izdelek.
- Doğru bir şekilde yerine getirilmediği takdirde yaralanma ya da ölüme yol açabilecek işlem ve süreçleri vurgular
- Tissottolinea l-azzjonijiet jew il-proċeduri, li jekk ma jsirux kif suppost, tista' ssir ħsara lil dan il prodott
- Evidențiază acțiuni sau proceduri care, dacă nu sunt corect efectuate, pot duce la deteriorarea acestui produs.



- Suitable gloves must be worn.
- Geeignete Schutzhandschuhe tragen.
- Käytettävä asianmukaisia käsineitä.
- Bruk egnede hansker.
- Απαιτείται να φοράτε κατάλληλα γάντια
- Devem ser utilizadas luvas adequadas.
- Należy zakładać odpowiednie rękawice
- Kohustuslik kanda sobivaid kaitsekindaid
- Jāvalkā piemēroti cimdi.
- Работы должны проводиться в соответствующих перчатках
- Uygun eldiven giyilmelidir
- Este necesară purtarea unor mănuşi adecvate.
- Altijd geschikte handschoenen dragen.
- Le port de gants adaptés est obligatoire.
- Använd lämpliga handskar.
- Der skal anvendes egnede handsker.
- Se deben llevar puestos guantes apropiados.
- Indossare guanti di protezione.
- Je nutné použít vhodné rukavice.
- Viseljen megfelelő védőkesztyűt.
- Reikia mūvėti tinkamas pirštines.
- Uporabiti je treba ustrezne rokavice.
- Għandhom jintlibsu ingwanti adatti



- Highlights the requirements for disposing of used parts and waste.
- Benadrukt de vereisten voor het weggooien van gebruikte onderdelen en afval.
- Weist auf die Anforderungen zur Entsorgung gebrauchter Teile und Abfall hin.
- Met en relief les consignes de mise au rebut des pièces usagées et des déchets.
- Osoittaa käytettyjen osien ja jätteen hävittämistä koskevia vaatimuksia.
- Anger de krav som ställs på bortskaffande av gamla delar och avfall.
- Fremhever kravene for avhending av brukte deler og avfall.
- Fremhæver kravene til bortskaffelse af udtjente dele og affald.
- Επισημαίνει τις απαιτήσεις απόρριψης των χρησιμοποιημένων εξαρτημάτων και των απορριμμάτων
- Destaca los requisitos para desechar las piezas usadas y los residuos.
- Realça os requisitos para eliminar as peças utilizadas e os desperdícios.
- Segnala i criteri per lo smaltimento di componenti usati e rifiuti.
- Wskazuje wymagania dotyczące usuwania zużytych części i odpadów.
- Zvýrazňuje požiadavky pre zneškodňovanie použitých dielov a odpadu.
- Upozornění na požadavky týkající se likvidace použitých dílů a odpadu.
- Tõstab esile kasutatud osade ja jääkide utiliseerimisele esitatavad nõuded
- A használt alkatrészek és a hulladék megfelelő módon történő elhelyezésére hívja fel a figyelmet.
- Uzsver prasības tam, kā atbrīvoties no lietotajām detaļām un atkritumiem.
- Žymi panaudotų dalių ir atliekų išmetimo reikalavimus.
- Указывает на требования по уничтожению использованных деталей и отходов
- Označuje zahteve za odlaganje rabljenih delov in odpadkov.
- Kullanılmış parçaların ve atıkların atılmasına ilişkin gereklilikleri vurgular
- Tissottolinea l-kundizzjonijiet biex wieħed jarmi l-partijiet użati u l-iskart
- Evidențiază cerințele pentru depunerea la deșeuri a pieselor uzate și a reziduurilor.



- Pressure. • Druk • Druck. • Pression.
- Paine. • Tryck • Trykk • Tryk
- Πίεση • Presión. • Pressão. • Pressione.
- Ciśnienie • Tlak.. • Tlak. • Surve.
- Nyomás alatt. • Spiediens. • Slėgis. • Давление
- Tlak • Basınç • Pressjoni • Presiune.



- Release Pressure. • Druk aflaten. • Druck ablassen.
- Évacuation de pression. • Vapauta paine. • Tryckutsläpp.
- Avlast trykk • Aflast tryk • Εκτόνωση πίεσης
- Despresurizar. • Liberta Pressão. • Scaricare la pressione.
- Ciśnienie spustowe • Uvoľnite tlak. • Uvolnění tlaku.
- Surve väljalase • Engedje ki a nyomást. • Pazeminiet spiedienu.
- Išleiskite slėgį. • Стравить давление • Sprostitev tlaka.
- Basıncı Kaldırın • Neħħi l-pressjoni • Depresurizare.



- Replace every year • Elk jaar vervangen • Jährlich austauschen
- Remplacer tous les ans. • Vaihda vuosittain. • Byt varje år
- Skift ut hvert år • Udskift en gang om året • Αντικατάσταση κάθε χρόνο
- Sustituir anualmente • Substituir todos os anos • Sostituire ogni anno
- Należy wymieniać raz w roku • Každý rok vymieňajte • Nutná výměna každý rok.
- Asendage igal aastal • Évente cserélje • Nomainiet reizi gadā
- Keiskite kartą per metus • Заменять каждый год. • Zamenjajte vsako leto.
- Her yıl değiştirin • Ibdel kull sena • Înlocuire anuală



- Filter housing / Model • Filterhuis / Model • Filtergehäuse / Modell
- Logement du filtre/modèle. • Suodatinkotelo/-malli • Filterhus/modell
- Filterhus/-modell • Filterhus/modell • Υποδοχή/μοντέλο φίλτρου
- Caja de filtro/modelo. • Caixa / Modelo do filtro • Corpo del filtro / Modello
- Obudowa filtra / model. • Kryt filtra / Model • Kryt filtru / Model
- Filtri korpus/mudel • Szűrőház / típus • Filtra korpuss / modelis
- Filtro korpusas / modelis • Корпус фильтра / модель • Ohišje filtra / Model
- Filtre muhafazası / Model • Kontenitur tal-filtru - Mudell • Carcasă filtru / Model



- High efficiency filter element • Zeer efficiënt filterelement
- Hochleistungsfilterelement • Cartouche filtrante haute efficacité.
- Tehokas suodatinelementti • Högeffektivt filterelement
- Høyeffektivt filterelement • Högeffektivt filterelement
- Φίλτρο υψηλής απόδοσης • Elemento filtrante de gran eficiencia.
- Elemento do filtro de elevado rendimento • Elemento filtrante ad alta efficienza
- Wysokowydajny wkład filtra • Vysoko účinný filtračný článok
- Vysoce účinný filtrační prvek • Kõrgtootlik filterelement
- Nagy hatékonyságú szűrőelem • Augstas produktivitātes filtra elements
- Labai efektyvus filtravimo elementas • Высокоэффективный фильтрующий элемент
- Visoko učinkovit filtrirni element • Yüksek etkinlikli filtre öğesi
- Element tal-filtru b'effiċjenza kbira • Element filtrant cu eficienţă ridicată



- Ensure correct tool is used • Stellen Sie sicher, dass Sie das richtige Werkzeug verwenden.
- Zorg dat het juiste gereedschap wordt gebruik • Käytettävä oikeaa työkalua
- Vérifier que les outils adéquats sont utilisés. • Pass på at korrekt verktøy brukes
- Se till att rätt verktyg används. • Βεβαιωθείτε ότι χρησιμοποιείται το σωστό εργαλείο
- Sørg for at benytte korrekt værktøj • Certifique-se de que é utilizada a ferramenta correcta
- Asegúrese de que se utiliza la herramienta adecuada • Należy używać odpowiedniego narzędzia.
- Assicurarsi di utilizzare l'utensile corretto • Zkontrolujte použití správného nástroje
- Uistite sa, že používate správny nástroj • Mindig a célnak megfelelő szerszámot használja
- Tagage õige tööriista kasutamine • Įsitikinkite, kad naudojamas reikiamas įrankis
- Izmantojiet tikai atbilstošus darbarīkus • Poskrbite, da boste uporabili ustrezno orodje
- Убедитесь, что используется правильный инструмент • Kun żgur li tintuża l-għodda t-tajba
- Doğru alet kullanılmasını sağlayın • Asigurați-vă că este utilizată scula corectă
-



- Next service date (month/year) • Volgende onderhoudsdatum (maand / jaar)
- Nächster Wartungstermin (Monat/Jahr) • Date de la prochaine révision (mois/année)
- Seuraava huollon päivämäärä (kuukausi/vuosi) • Nästa servicedatum (månad/år)
- Neste servicedato (måned/år) • Næste servicedato (måned/år)
- Επόμενη ημερομηνία σέρβις (μήνας / έτος) • Fecha de siguiente revisión (mes/año)
- Data da próxima intervenção técnica (mês / ano) • Prossimo intervento di assistenza (mese / anno)
- Data następnego serwisu (miesiąc/rok) • Dátum nasledujúcej opravy (mesiac/rok)
- Datum příští prohlídky (měsíc / rok) • Järgmise hoolduse kuupäev (kuu / aasta)
- Következő szerviz dátuma (hó / év) • Nākamais apkopes datums (mēnesis / gads)
- Kitos techninės priežiūros data (mėnuo / metai) • Дата следующего обслуживания (месяц/год)
- Datum naslednjega servisa (mesec / leto) • Bir sonraki servis tarihi (ay / yıl)
- Id-data tas-servis li jmiss (xahar / sena) • Data următoarei vizite de service (lună/an



Warning!
This product must be installed and maintained by competent and authorised personnel only, under strict observance of these operating instructions, any relevant standards and legal requirements where appropriate.

Retain this user guide for future reference

Waarschuwing!
Dit product mag alleen geïnstalleerd en onderhouden worden door deskundig en bevoegd personeel met strikte inachtneming van deze bedieningsinstructies en de betreffende normen en wettelijke vereisten indien van toepassing.

Bewaar deze handleiding als naslag.

Warnung!
Das Produkt darf ausschließlich von autorisiertem Fachpersonal unter strikter Befolgung dieser Betriebsanleitung, ggf. relevanter Normen sowie gesetzlicher Vorschriften installiert und gewartet werden.

Bewahren Sie die Bedienungsanleitung zu Referenzzwecken auf.

Attention !
Ce produit doit être installé et entretenu exclusivement par un personnel compétent et autorisé, dans le respect le plus strict de ce mode d'emploi et des normes applicables et exigences légales éventuelles.

Conserver ce guide de l'utilisateur à titre de référence future

Varoitus!
Tämän tuotteen saa asentaa ja huoltaa vain pätevä ja valtuutettu henkilöstö, noudattaen tarkasti näitä käyttöohjeita, kaikkia asiaankuuluvia normeja ja tarpeen vaatiessa lain asettamia vaatimuksia.

Säilytä tämä käyttöohje tulevaa tarvetta varten.

Varning!
Produkten får endast installeras och underhållas av utbildad och behörig personal, som följer denna bruksanvisning och eventuella tillämpliga normer och lagföreskrifter noga i förekommande fall.

Behåll denna användarhandbok som referens

Advarsel!
Dette produktet må bare installeres og vedlikeholdes av kompetent og autorisert personale, i streng overholdelse av disse betjeningsanvisningene, alle relevante standarder og rettslige krav der det passer.

Ta vare på denne brukerveiledningen for senere bruk

Advarsel!
Dette produkt må kun installeres og vedligeholdes af autoriseret personale, under nøje overholdelse af disse driftsinstruktioner, relevante standarder og lovgivningsmæssige krav, hvor dette er aktuelt.

Gem denne vejledning til senere reference.

Προειδοποίηση!
Η εγκατάσταση και συντήρηση αυτού του προϊόντος πρέπει να γίνεται μόνο από κατάλληλα εκπαιδευμένο και εξουσιοδοτημένο προσωπικό, με αυστηρή τήρηση των οδηγιών χειρισμού, των εφαρμοζόμενων προτύπων και των νομικών απαιτήσεων όπου απαιτείται.

Φυλάξτε αυτό το εγχειρίδιο χρήσης για μελλοντική αναφορά

Advertencia
La instalación y mantenimiento de este producto debe ser efectuada únicamente por personal competente y autorizado, respetándose de forma estricta estas instrucciones de funcionamiento, así como cualquier norma y requerimiento legal que sean aplicables.

Conserve esta guía del usuario para poder consultarla en el futuro.

Advertência!
A instalação e a manutenção deste produto só deve ser realizada por pessoal autorizado e competente, sob estrita observância destas instruções de utilização e de quaisquer normas e requisitos legais relevantes, quando adequado.

Conserve este guia do utilizador para referência futura

Attenzione
L'installazione e la manutenzione del prodotto devono essere affidate a personale competente e autorizzato, nel rigoroso rispetto delle presenti istruzioni di funzionamento, degli standard applicabili e delle normative in vigore, qualora appropriato.

Conservare questa guida utente per consultarla in seguito

Ostrzeżenie!
Instalacja i konserwacja urządzenia muszą być prowadzone przez wykwalifikowany personel, w zgodzie z poniższymi instrukcjami, obowiązującymi standardami i wymogami prawa.

Niniejszą instrukcję należy zachować do późniejszego wykorzystania.

Pozor!
Tento výrobok musí byť nainštalovaný a udržiavaný iba kompetentnou a autorizovanou osobou, pri prísnom dodržiavaní tohto návodu na použitie, príslušných štandardov a zákonných požiadaviek v prípade potreby.

Uschovajte túto užívateľskú príručku pre budúce použitie

Upozornění!
Tento produkt smí instalovat a údržbu smí provádět pouze kompetentní a autorizovaný personál, a to za přísného dodržování tohoto návodu k obsluze, veškerých relevantních norem a zákonných požadavků tam, kde je to nutné.

Tuto uživatelskou příručku uschovejte pro pozdější potřebu.

Hoiatus!
Toote paigaldamine ja hooldamine on lubatud ainult pädeval, vastavate volitustega töötajal, kes tegutseb kasutusjuhendi nõudeid, asjakohaseid standardeid ja kehtivaid eeskirju järgides

Hoidke käesolev kasutusjuhend alal edaspidiseks kasutamiseks

Figyelem!
A terméket csak szakképzett és felhatalmazott személy helyezheti üzembe és tarthatja karban, a kezelési utasítások, a vonatkozó szabványok és jogi előírások szigorú betartása mellett, ahol azok alkalmazhatóak.

A leírást tartsa mindig elérhető helyen

Brīdinājums!
Iekārtas uzstādīšanu un apkopi drīkst veikt tikai kompetents un pilnvarots personāls, stingri ievērojot lietošanas instrukciju un citus saistītus standartus un likumdošanā noteiktās prasības, kad nepieciešams.

Saglabājiet šo lietotāja rokasgrāmatu turpmākām uzziņām

Įspėjimas!
Montuoti ir prižiūrėti šį gaminį gali tik kompetentingi ir įgalioti darbuotojai, griežtai laikydamiesi šių naudojimo instrukcijų, visų atitinkamų standartų bei teisinių reikalavimų, jei tai yra taikytina.

Pasilikite šį vartotojo vadovą, jame esančios informacijos gali prireikti vėliau

Предупреждение!
Установку и техническое обслуживание данного оборудования разрешается выполнять только специалисту, имеющему допуск к выполнению таких работ, при строгом соблюдении данной инструкции по эксплуатации, соответствующих стандартов и применимых нормативных актов.

Сохраните это руководство пользователя, чтобы обращаться к нему в дальнейшем

Opozorilo!
Izdelek lahko namestijo in vzdržujejo le usposobljeni in pooblaščeni delavci, ki morajo pri tem strogo upoštevati navodila za uporabo, vse standarde in zakonske zahteve, ki veljajo za posamezno situacijo.

Shranite ta navodila za uporabo za v prihodnje

Dikkat!
Bu ürün yalnızca yetkili ve kalifiye personel tarafından monte edilmeli ve bakımı yapılmalıdır. Kullanım talimatına, ilgili standartlara ve yasal şartlara harfiyen uyulmalıdır.

Bu kullanım kılavuzunu ileride başvurmak için saklayın.

Twissija!
Dan il-prodott għandu jiġi installat u jingħata l-manutenzjoni minn personal kompetenti u awtorizzat biss, taħt sorveljanza stretta ta' dawn l-istruzzjonijiet tat-tħaddim, u kwalunkwe standards u ħtiġijiet legali rilevanti fejn hu xieraq.

Erfa' din il-gwida biex tikkonsultaha fil-futur.

Vertizare!
Acest produs trebuie instalat și întreținut numai de către personal competent și autorizat, cu respectarea strictă a acestor instrucțiuni de utilizare, a tuturor standardelor relevante și a cerințelor legale, unde este cazul.

Păstrați acest ghid al utilizatorului pentru consultări ulterioare

Index

• **Index** • Stichwortverzeichnis • **Index** • Sisältö • **Index** • Innholdsfortegnelse • **Indeks** • Ευρετήριο • **Índice** • Índice • **Indice** • Skorowidz
• Obsah • Rejstřík • Register • Index • Saturs • Turinys • Указатель • Kazalo • **Dizin** • Indiċi • **Index**

1. Technical Specification

• **Technische specificaties** • **Technische Angaben** • **Caractéristiques techniques** • **Tekniset tiedot** • **Tekniska specifikationer**
• **Tekniske spesifikasjoner** • **Tekniske specifikationer** • **Τεχνικές προδιαγραφές** • **Especificaciones técnicas** • **Especificações Técnicas**
• **Caratteristiche tecniche** • Dane techniczne • Technická špecifikácia • Technická specifikace • Tehnilised andmed • Műszaki adatok
• Tehniskā specifikācija • Techninė specifikacija • Технические характеристики • Tehnične specifikacije • **Teknik Spesifikasyon**
• Speċifikazzjoni Teknika • **Specificaţie tehnică**

2. Installation Recommendations

• **Installatie** • Installation • **Installation** • Asennus • **Installation** • Innstallasjon • **Installation** • Εγκατάσταση • **Instalación** • Instalação
• **Installazione** • Zalecenia dotyczące instalacji • Odporúčania ohľadom inštalácie • Doporučení ohledně instalace • Paigaldussoovitused
• Telepítési követelmények • Ieteikumi uzstādīšanai • Montavimo rekomendacijos • Рекомендации по установке
• Priporočila za namestitev • **Kurma Konusunda Tavsiyeler** • Rakkomandazzjonijiet għall-Installazzjoni • **Recomandări de instalare**

3. Startup and Operation

• **Starten en bediening** • Start und Betrieb • **Démarrage et exploitation** • Käynnistys ja toiminta • **Start och drift** • Oppstart og betjening
• **Start og drift** • Έναρξη λειτουργίας και χειρισμός • **Puesta en marcha y funcionamiento** • Arranque e Operação • **Avvio e funzionamento**
• Uruchomienie i eksploatacja • Spustenie a prevádzka • Spuštění a provoz • Käikulaskmine ja töötamine • Beindítás és üzemeltetés
• Darbības uzsākšana un darbība • Paleidimas ir naudojimas • Запуск и эксплуатация • Zagon in uporaba • **Çalıştırma ve İşletme**
• Kif Tixgħel u Kif Thaddem • **Pornire şi funcţionare**

4. Accessories

• **Toebehoren** • Zubehör • **Accessoires** • Lisävarusteet • **Tillbehör** Tilbehør • **Tilbehør** • Εξαρτήματα • **Accesorios** • Acessórios • **Accessori**
• Wyposażenie • Príslušenstvo • Příslušenství • Tarvikud • Tartozékok • Piederumi • Priedai • Принадлежности • Dodatna oprema
• **Aksesuarlar** • Aċċessorji • **Accesorii**

5. Spare Parts (Service Kits)

• **Reserve-onderdelen (servicekits)** • Ersatzteile (Service-Kits) • **Pièces de rechange (nécessaires d'entretien)** • Varaosat (Huoltopakkaukset)
• **Reservdelar (servicesatser)** • Reservedeler (service-sett) • **Reservedele (Servicekit)** • Ανταλλακτικά (Πακέτα τεχνικής υποστήριξης)
• **Piezas de repuesto (kits de mantenimiento)** • Peças Sobressalentes (Kit de Reparação) • **Ricambi (kit per l'assistenza)**
• Części zamienne (zestawy serwisowe) • Náhradné diely (Servisná súprava) • Náhradní díly (Sady pro údržbu)
• Varuosad (hooldekomplektid) • Pótalkatrészek (szervizkészletek) • Rezerves daļas (apkopes komplekti)
• Atsarginės dalys (priežiros detalių komplektai) • Запасные части (ЗИП) • Nadomestni deli (servisni kompleti)
• **Yedek parça (Servis kitleri)** • Partijiet Ghat-Tibdil (Kitts tas-Servizz) • **Piese de schimb (Truse de service)**

6. Maintenance

• **Onderhoud** • Wartung • **Entretien** • Kunnossapito • **Underhåll** • Vedlikehold • **Vedligeholdelse** • Συντήρηση • **Mantenimiento** • Manutenção
• **Manutenzione** • Konserwacja • Údržba • Údržb • Hooldus • Karbantartás • Tehniskā apkope • Techninė priežiūra • Обслуживание
• Vzdrževanja • **Bakım** • Manutenzjoni • **Întreţinere**

	Model	BSPT/NPT Port Size	Flow Rate	Dimensions	Weight	Operating Parameters	Filter Grade	Filter Models	Max Operating Pressure	Max Operating Temperature	Min Operating Temperature
EN	Model	BSPT/NPT Port Size	Flow Rate	Dimensions	Weight	Operating Parameters	Filter Grade	Filter Models	Max Operating Pressure	Max Operating Temperature	Min Operating Temperature
NL	Model	BSPT/NPT poortafmeting	Stroom snelheid	Afmetingen	Gewicht	Bedrijfs parameters	Filter kwaliteitsgraad	Filter modellen	Maximale bedrijfs druk	Maximale bedrijfs temperatuur	Minimale bedrijfs temperatuur
DE	Modell	BSPT/NPT Anschlussgröße	Durchfluss-rate	Abmessungen	Gewicht	Betriebsparameter	Filterklasse	Filtermodell	Max. Betriebs-druck	Max. Betriebstemperatur	Min. Betriebstem peratur
FR	Modèle	Taille du port BSPT/NPT	Débit	Dimensions	Poids	Paramètres de fonctionnement	Grade de filtres	Modèles de filtres	Pression de fonctionnement max.	Température de fonctionnement max.	Température de fonctionnement min.
F	Malli	BSPT NPT-portin koko	Virtaus-nopeus	Mitat	Paino	Käyttö-parametrit	Suodatin-luokka	Suodatin-mallit	Suurin käyttö-paine	Suurin käyttö-lämpötila	Pienin käyttö-lämpötila
SV	Modell	BSPT NPT-öppningsstorlek	Flödes-hastighet	Mått	Vikt	Drifts-parametrar	Filter-klass	Filter-modeller	Högsta drifts-tryck	Högsta drifts-temperatur	Lägsta drifts-temperatur
NO	Modell	BSPT NPT-Portstørrelse	Strømnings-hastighet	Mål	Vekt	Drifts-parametere	Filter-type	Filter-modeller:	Maks. drifts-trykk	Maks. drifts-temperatur	Min.drifts-temperatur
DA	Model	BSPT NPT-portstørrelse	Flow-hastighed	Mål	Vægt	Drifts-parametre	Filter-kvalitet	Filter-modeller	Maks. drifts-tryk	Maks. drifts-temperatur	Min.drifts-temperatur
EL	Μοντέλο	Μέγεθος θύρας BSPT/NPT	Ρυθμός παροχής	Διαστάσεις	Βάρος	Παράμετροι λειτουργίας	Κατηγορία φίλτρου	Μοντέλα φίλτρων	Μέγ. πίεση λειτουργίας	Μέγ. θερμοκρασία λειτουργίας	Ελάχ. θερμοκρασία λειτουργίας
ES	Modelo	Tamaño de puerto BSPT/NPT	Caudal	Dimensiones	Peso	Parámetros de funcionamiento	Grado del filtro	Modelos de filtros	Presión de funcionamiento máxima	Temperatura de funcionamiento máxima	Temperatura de funcionamiento mínima
PT	Modelo	Tamanho da Porta BSPT NPT	Taxa de Fluxo	Dimensões	Peso	Parâmetros de Funcionamento	Grau do Filtro	Modelos do Filtro	Pressão Máx. de Funcionamento	Temperatura Máxima de Funcionamento	Temperatura Mínima de Funcionamento
T	Modello	Dimensioni collega-mento BSPT/NPT	Portata	Dimensioni	Peso	Parametri di esercizio	Grado di filtrazione	Filtri	Pressione di esercizio massima	Temperatura di esercizio massima	Temperatura di esercizio minima
PL	Model	Wielkość otworu BSPT/NPT	Prędkość przepływu	Wymiary	Ciężar	Parametry pracy	Klasa filtra	Typy filtrów	Maks. ciśnienie robocze	Maks. temperatura pracy	Min. temperatura pracy
SK	Model	BSPT/NPT Veľkosť portu	Prietoková rýchlosť Rate	Rozmery	Hmotnosť	Prevádzkové parametre	Trieda filtra	Typy filtrov	Max. prevádzkový tlak	Max. prevádzková teplota	Min. prevádzková teplota
CS	Model	Velikost závitu BSPT/NPT	Rychlost průtoku	Rozměry	Hmotnost	Provozní parametry	Klasifikace filtru	Modely filtru	Maximální provozní tlak	Maximální provozní teplota	Minimální provozní teplota
ET	Mudel	BSPT/NPT pordi suurus	Voolukulu	Mõõtmed	Kaal	Talitlusparameetrid	Filtratsiooniaste	Filtri mudelid	Maksimaalne töösurve	Maksimaalne töötemperatuur	Minimaalne töötemperatuur
HU	Típus	BSPT/NPT Csőcsonk mérete	Áramlási sebesség	Méretek	Tömeg	Üzemi paraméterek	Szűrő fokozat	Szűrő típusa	Max. üzemi nyomás	Max. Üzemi hőmérséklet	Min. Üzemi hőmérséklet
LV	Modelis	BSPT/NPT porta lielums	Plūsmas ātrums	Izmēri	Svars	Darbības parametri	Filtru kategorija	Filtru modeli	Maks. darbības spiediens	Maks. darbības temperatūra	Min. darbības temperatūra
LT	Modelis	BSPT/NPT Prievado dydis	Srauto tėkmgreitisės	Matmenys	Svoris	Darbiniai parametrai	Filtro klasė	Filtro modeliai	Maks. darbinis slėgis	Maks. darbinė temperatūra	Min. darbinė temperatūra
RU	Модель	Диаметр отверстия BSPT/NPT	Скорпотока	Габариты	Вес	Рабочие параметры	Качество фильтра	Модели фильтров	Макс. рабочее давление	Макс. рабочая температура	Мин. рабочая температура
SL	Model	Velikost vrat BSPT/NPT	Hitrost pretoka	Mere	Teža	Delovni parametri	Razred filtra	Modeli filtrov	Maks. delovni tlak	Maks. delovna temperatura	Min. delovna temperatura
TR	Model	BSPT/NPT Port Boyu	Akım Hızı	Boyutlar	Ağırlık	İşletim Parametreleri	Filtre Derecesi	Filtre Modelleri	Azami İşletme Basıncı	Azami İşletme Isısı	Asgari İşletme Isısı
MT	Mudell	Daqs tal-Port BSPT/NPT	Rata tal-Fluss	Dimensjonijiet	Piż	Parametri ta l-Operar	Grad tal-Filtru	Mudelli tal-Filtru	Pressjoni Massima ta' l-Operar	Temperatura Massima ta' l-Operar	Temperatura Minima ta' l-Operar
RO	Mode	Dimensiune port BSPT/NP	Debi	Dimensiun	Greutat	Parametri de funcţionar	Gradul filtrului	Modele de filtr	Presiune maxim„ de funcţionar	Temperatur„ maxim„ de funcţionar	Temperatur„ minim„ de funcţionar

1. Technical Specification

• Technische specificaties • Technische Angaben • Caractéristiques techniques • Tekniset tiedot • Tekniska specifikationer
• Tekniske spesifikasjoner • Tekniske specifikationer • Τεχνικές προδιαγραφές • Especificaciones técnicas • Especificações Técnicas
• Caratteristiche tecniche • Dane techniczne • Technická špecifikácia • Technická specifikace • Tehnilised andmed • Műszaki adatok
• Tehniskā specifikācija • Techninė specifikacija • Технические характеристики • Tehnične specifikacije • Teknik Spesifikasyon
• Speċifikazzjoni Teknika • **Specificație tehnică**

Model	Pipe Size	L/s	m³/min	m³/hr	cfm
005A	¼"	6	0.4	22	13
005B	⅜"	6	0.4	22	13
005C	½"	6	0.4	22	13
010A	¼"	10	0.6	36	21
010B	⅜"	10	0.6	36	21
010C	½"	10	0.6	36	21
015B	⅜"	20	1.2	72	42
015C	½"	20	1.2	72	42
020C	½"	30	1.8	108	64
020D	¾"	30	1.8	108	64
020E	1"	30	1.8	108	64
025D	¾"	60	3.6	216	127
025E	1"	60	3.6	216	127
030E	1"	110	6.6	396	233
030F	1¼"	110	6.6	396	233
030G	1½"	110	6.6	396	233
035F	1¼"	160	9.6	576	339
035G	1½"	160	9.6	576	339
040G	1½"	220	13.2	792	466
040H	2"	220	13.2	792	466
045H	2"	330	19.8	1188	699
050I	2½"	430	25.9	1548	911
050J	3"	430	25.9	1548	911
055I	2½"	620	37.3	2232	1314
055J	3"	620	37.3	2232	1314

BSPT / NPT

AA005A □ FX

- B = BSPT
- N = NPT

Filter Grade	Models	Max Operating Pressure		Max Recommended Operating Temperature		Min Recommended Operating Temperature	
		bar g	psi g				
AO	005□□F□-055□□F□	16	232	80ºC	176ºF	1.5ºC	35ºF
AO	005□□M□-055□□M□	20	290	100ºC	212ºF	1.5ºC	35ºF
AA	005□□F□-055□□F□	16	232	80ºC	176ºF	1.5ºC	35ºF
AA	005□□M□-055□□M□	20	290	100ºC	212ºF	1.5ºC	35ºF
AR	005□□M□-055□□M□	20	290	100ºC	212ºF	1.5ºC	35ºF
AAR	005□□M□-055□□M□	20	290	100ºC	212ºF	1.5ºC	35ºF
ACS	005□□M□-055□□M□	20	290	50ºC	122ºF	1.5ºC	35ºF

Weights and Dimensions

• Gewichten en afmetingen • Gewicht und Abmessungen • Poids et dimensions • Painot ja mitat • Vikter och mått • Vekt og dimensjone • Vægt og mål • VΨgt og m¨l • Pesos y dimensiones • Pesos e Dimensões • Pesi e dimensioni • Ciężary i wymiary • Hmotnosti a rozmery • Hmotnost arozměry • Kaalud ja mõõtmed • Tömeg és méretek • Svars un izmēri • Svoris ir matmenys • Вес игабариты • Teže in mere • Ağırlıklar ve Boyutlar • Piżijiet u Dimensjonijiet • **Greutăți și dimensiuni**

Model	Pipe Size	A		B		C		D		Weight	
		mm	ins	mm	ins	mm	ins	mm	ins	kg	lbs
005A	¼"	76	3	154.5	6.1	126.5	5	40	1.58	0.5	1.1
005B	⅜"	76	3	154.5	6.1	126.5	5	40	1.58	0.5	1.1
005C	½"	76	3	154.5	6.1	126.5	5	40	1.58	0.5	1.1
010A	¼"	76	3	181.5	7.2	153	6	40	1.58	0.6	1.3
010B	⅜"	76	3	181.5	7.2	153	6	40	1.58	0.6	1.3
010C	½"	76	3	181.5	7.2	153	6	40	1.58	0.6	1.3
015B	⅜"	97.5	3.8	235	9.3	201	7.9	50	1.97	1.1	2.4
015C	½"	97.5	3.8	235	9.3	201	7.9	50	1.97	1.1	2.4
020C	½"	97.5	3.8	235	9.3	201	7.9	50	1.97	1.1	2.4
020D	¾"	97.5	3.8	235	9.3	201	7.9	50	1.97	1.1	2.4
020E	1"	97.5	3.8	235	9.3	201	7.9	50	1.97	1.1	2.4
025D	¾"	129	5.1	275	10.8	232.5	9.2	70	2.76	2.2	2.5
025E	1"	129	5.1	275	10.8	232.5	9.2	70	2.76	2.2	2.5
030E	1"	129	5.1	364.5	14.3	322	12.7	70	2.76	2.7	2.9
030F	1¼"	129	5.1	364.5	14.3	322	12.7	70	2.76	2.7	2.9
030G	1½"	129	5.1	364.5	14.3	322	12.7	70	2.76	2.7	2.9
035F	1¼"	170	6.7	432.5	17	382.5	15.1	100	3.94	5.1	11.2
035G	1½"	170	6.7	432.5	17	382.5	15.1	100	3.94	5.1	11.2
040G	1½"	170	6.7	524.5	20.6	474.5	18.7	100	3.94	7	12.5
040H	2"	170	6.7	524.5	20.6	474.5	18.7	100	3.94	7	12.5
045H	2"	170	6.7	524.5	20.6	474.5	18.7	100	3.94	7	12.5
050I	2½"	205	8.1	641.5	25.3	581.5	22.9	120	4.72	11.1	24.4
050J	3"	205	8.1	641.5	25.3	581.5	22.9	120	4.72	11.1	24.4
055I	2½"	205	8.1	832	32.8	772	30.4	120	4.72	13.9	30.6
055J	3"	205	8.1	832	32.8	772	30.4	120	4.72	13.9	30.6

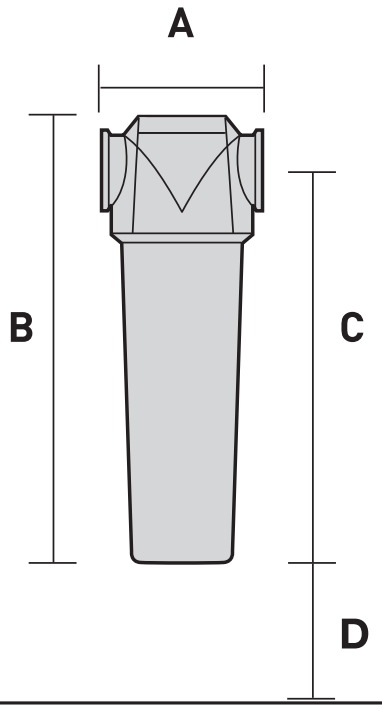

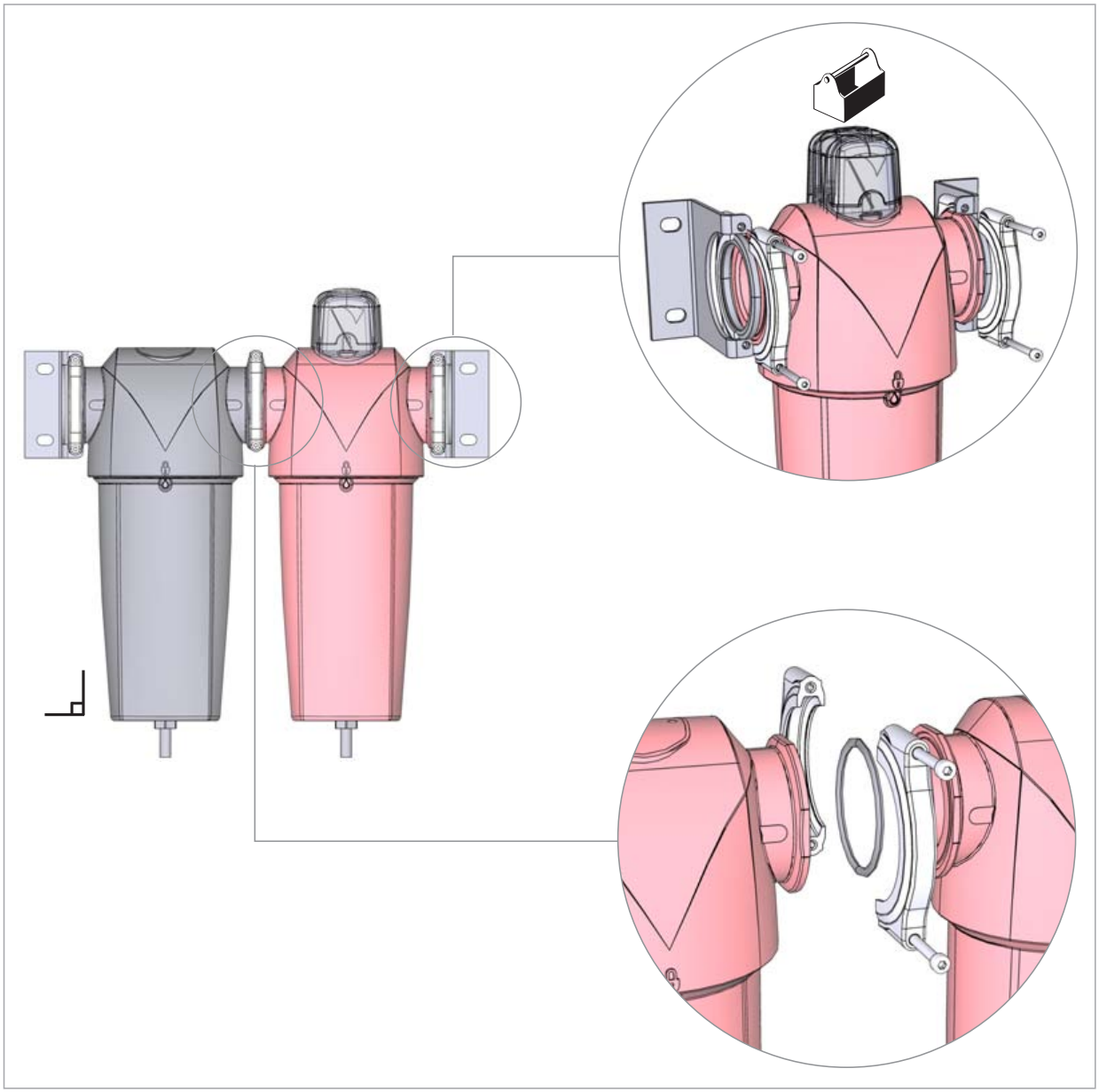

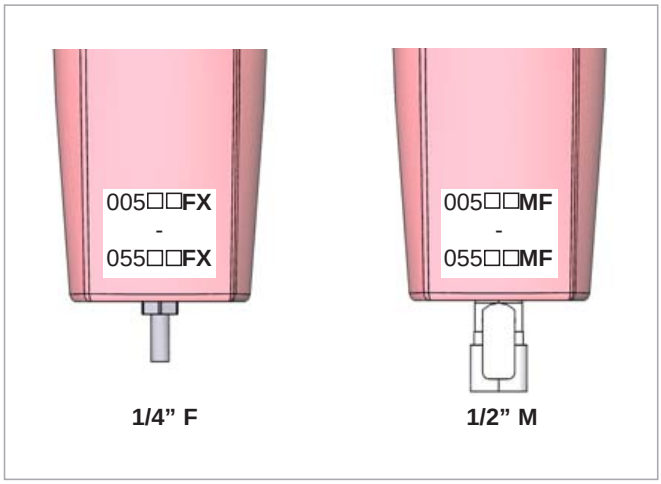
005□□FX
-
055□□FX
005□□MF
-
055□□MF
1/4” F
1/2” M

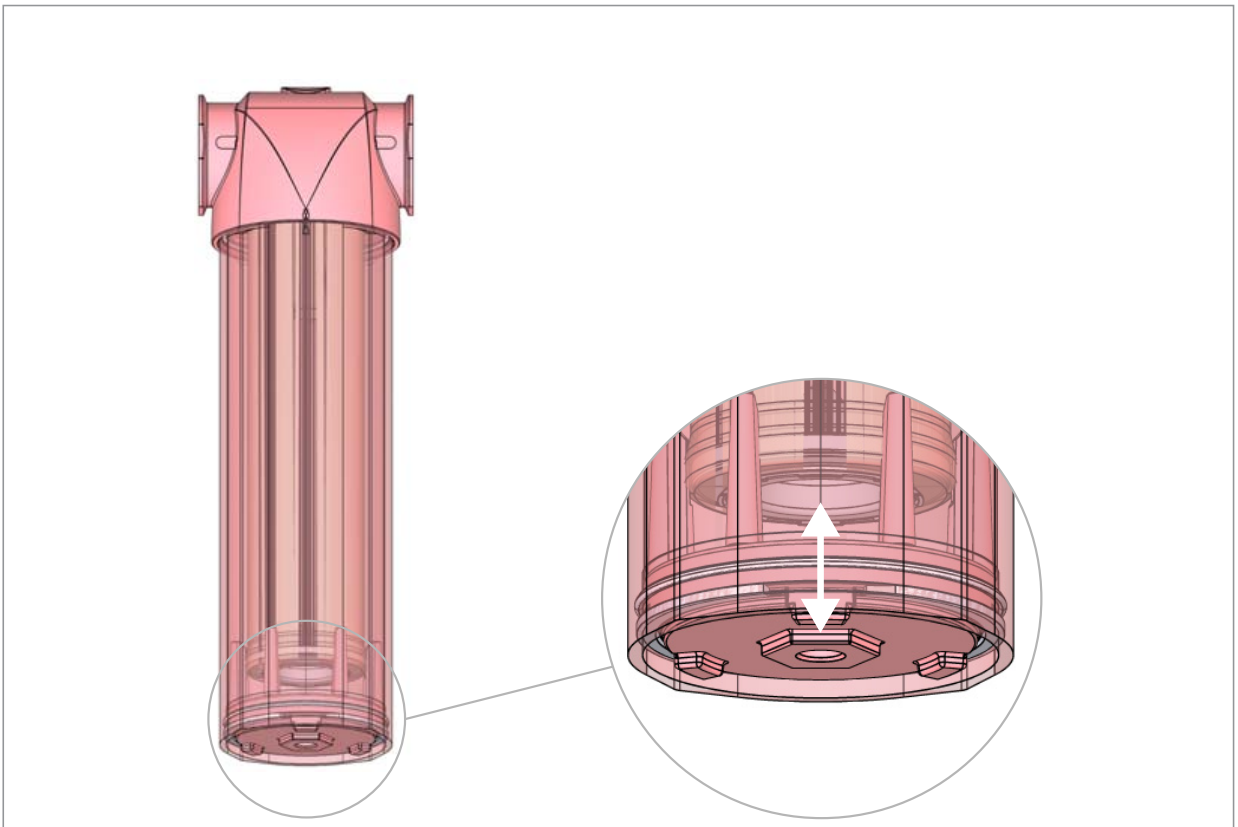

050 & 055

EN The lower closure plate may move when the filter is not pressurised.

NL Het onderste sluitplaatje zou kunnen bewegen wanneer het filter niet onder druk staat.

DE Die untere Verschlussplatte kann sich bewegen, wenn der Filter nicht mit Druck beaufschlagt ist.

FR La plaque d'obturation la plus basse peut bouger si le filtre n'est pas pressurisé.

FI Alempi sulkulevy saattaa liikkua, kun suodatin ei ole paineistettu.

SV Den lägre slutningsplattan kan rubbas när filtret inte är trycksatt.

NO Den nedre trykkplaten kan bevege seg når filteret ikke er trykksatt.

DA Den nedre lukkeplade kan bevæge sig, når filtret ikke sættes under tryk.

EL Η κάτω πλάκα κλεισίματος μπορεί να μετακινηθεί εάν το φίλτρο δεν βρίσκεται υπό πίεση.

ES La placa inferior de cierre puede moverse si el filtro no está presurizado.

PT A placa de isolamento inferior pode deslocar-se se o filtro não estiver pressurizado.

IT Quando il filtro non è sotto pressione, la piastra di chiusura inferiore potrebbe spostarsi.

PL Pokrywa dolna może się przesuwać, gdy filtr nie będzie pod ciśnieniem.

SK Ak filter nie je natlakovaný, spodná uzatváracia platňa sa môže posunúť.

CS Spodní uzavírací deska se může pohybovat, pokud je filtr pod tlakem.

ET Alumine sulgurplaat võib liikuda, kui filter ei ole rõhu all.

HU Az alsó zárólemez elmozdulhat, ha a szűrő nincs nyomás alatt.

LV Apakšējā noslēgplāksne var kustēties, ja filtrs nav zem spiediena.

LT Jeigu filtre nėra slėgio, apatinė uždaromoji plokštė gali judėti.

RU Если фильтр не загерметизирован, возможно смещение нижней замыкающей пластины.

SL Spodnja plošča za zapiranje se lahko premika, ko filter ni pod pritiskom.

TR Filtreye basınç uygulanmadığında alt kapama levhası hareket edebilir.

MT L-aċċessorji għandhom ikunu mqabbdin ma' l-ert - art

RO Placa inferioară de acoperire se poate deplasa atunci când filtrul nu este presurizat

3. Startup and Operation

• **Starten en bediening** • Start und Betrieb • **Démarrage et exploitation** • Käynnistys ja toiminta • **Start och drift** • Oppstart og betjening • **Start og drift** • Έναρξη λειτουργίας και χειρισμός • **Puesta en marcha y funcionamiento** • Arranque e Operação • **Avvio e funzionamento** • Uruchomienie i eksploatacja • Spustenie a prevádzka • Spuštění a provoz • Käikulaskmine ja töötamine • Beindítás és üzemeltetés • Darbības uzsākšana un darbība • Paleidimas ir naudojimas • Запуск и эксплуатация • Zagon in uporaba • **Çalıştırma ve İşletme** • Kif Tixghel u Kif Thaddem

EN

1. Open inlet valve slowly to gradually pressurise the unit.

2. Open outlet valve slowly to re-pressurise the downstream piping

Do not open inlet or outlet valves rapidly or subject unit to excessive pressure differential or damage may occur.

NL

1. Doe de inlaatklep langzaam open om het toestel geleidelijk onder druk te zetten.

2. Doe de uitlaatklep langzaam open om de leidingen verderop in het systeem opnieuw onder druk te zetten.

De inlaat- en uitlaatkleppen niet snel openen en het toestel niet aan een te groot drukdifferentieel blootstellen om schade te voorkomen.

DE

1. Einlassventil langsam öffnen, damit Einheit allmählich mit Druck beaufschlagt wird.

2. Auslassventil langsam öffnen, damit nachgeschaltete Rohrleitungen erneut mit Druck beaufschlagt werden.

Einlass- und Auslassventil nicht schnell öffnen. Einheit nicht extremen Druckunterschieden aussetzen. Gefahr von Schäden.

FR

1. Ouvrez lentement la soupape d'admission pour mettre progressivement l'unité sous pression.

2. Ouvrez lentement la soupape de refoulement pour faire remonter la pression des conduits en aval.

Évitez d'ouvrir la soupape d'admission ou la soupape de refoulement trop rapidement ou de soumettre l'unité à une pression différentielle trop importante au risque d'entraîner des dommages.

FI

1. Paineista yksikkö asteittain avaamalla tuloventtiili.

2. Paineista laskuputkisto uudelleen avaamalla lähtöventtiili hitaasti

Älä avaa tulo- tai lähtöventtiiliä nopeasti tai altista yksikköä liialliselle paine-erolle, sillä yksikkö voi vaurioitua.

SV

1. Öppna inloppsventilen långsamt så att enheten trycksätts gradvis.

2. Öppna utloppsventilen långsamt för att trycksätta rören nedströms på nytt.

Öppna inte inlopps- eller utloppsventilerna snabbt och utsätt inte enheten för överdrivet differentialtryck, eftersom det kan orsaka skador.

NO

1. Åpne inntaksventilen langsomt for å sette enheten gradvis under trykk.

2. Åpne uttaksventilen langsomt for å sette nedstrømsrørene under trykk igjen.

Ikke åpne inntaks- eller uttaksventilene rast eller utsett enheten for høyt differensialtrykk, da dette kan føre til skade.

DA

1. Åbn langsomt indgangsventilen for gradvist at sætte enheden under tryk.

2. Åbn langsomt udløbsventilen for at sætte rørene længere fremme under tryk igen.

Åbn ikke indgangs- eller udgangsventiler hurtigt, og udsæt ikke enheden for store trykforskelle, da det kan medføre skader.

EL

1. Ανοίξτε αργά τη βαλβίδα εισαγωγής για να ανέβει σταδιακά η πίεση της μονάδας.

2. Ανοίξτε αργά τη βαλβίδα εξαγωγής για να ανέβει η πίεση της σωλήνωσης κατάντι

Μην ανοίγετε γρήγορα τις βαλβίδες εισαγωγής ή εξαγωγής και μην υποβάλλετε τη μονάδα σε υπερβολική διαφορική πίεση, διότι μπορεί να προκύψει βλάβη.

ES

1. Abra lentamente la válvula de admisión para presurizar progresivamente la unidad.

2. Abra lentamente la válvula de descarga para volver a presurizar las tuberías aguas abajo.

Para evitar daños, no abra bruscamente las válvulas de admisión o de descarga ni someta la unidad a una diferencia de presiones excesiva.

PT

1. Abra lentamente a válvula de entrada para pressurizar gradualmente a unidade.

2. Abra lentamente a válvula de saída para pressurizar novamente a tubagem a jusante

Não abra rapidamente as válvulas de entrada ou saída nem sujeite a unidade a uma pressão diferencial excessiva, caso contrário poderão ocorrer danos.

IT

1. Aprire lentamente la valvola di mandata per aumentare gradualmente la pressione nell'unità.

2. Aprire lentamente la valvola di scarico per pressurizzare i tubi a valle

Non aprire rapidamente le valvole di mandata o scarico o sottoporre l'unità a una differenza di pressione eccessiva; rischio di danni.

PL

1. Powoli otwórz zawór wlotowy, aby stopniowo zwiększyć ciśnienie w urządzeniu.

2. Powoli otwórz zawór wylotowy, aby zwiększyć ciśnienie w rurach w dół przepływu.

Nie wolno szybko otwierać zaworów wlotowych ani wylotowych, ponieważ może to doprowadzić do zbyt dużej różnicy ciśnień w urządzeniu i do jego uszkodzenia.

SK

1. Pre postupné natlakovanie jednotky pomaly otvorte prívodný ventil.

2. Pre opätovné natlakovanie potrubia v smere toku pomaly otvorte vývodný ventil.

Neotvárajte prívodný alebo vývodný ventil rýchlo ani nevystavujte jednotku nadmernému rozdielu tlaku, lebo môže dôjsť k poškodeniu.

CS

1. Pomalým otevřením přívodního ventilu jednotku pozvolna natlakujte.

2. Pomalým otevřením výstupního ventilu znovu natlakujte potrubí ve směru rozvodu.

Přívodní ani výstupní ventily neotvírejte rychle, ani jednotku nevystavujte nadměrným rozdílům tlaku, v opačném případě může dojít k poškození.

ET

1. Üksuse järkjärguliseks survestamiseks avage sisselaskeventiil aeglaselt.

2. Surve taastamiseks väljavoolutorustikus avage väljalaskeventiil aeglaselt.

Sisselaske- ja väljalaskeventiile ei tohi avada kiiresti ega põhjustada üksuses liiga suurt survelangu, mis võib tekitada sellele kahjustusi.

HU

1. Az egység fokozatosan történő nyomás alá helyezéséhez a bemenő szelepet lassan nyissa meg.

2. Az elmenő csővezeték nyomásának visszaállításához lassan nyissa meg az elmenő szelepet

A berendezés károsodásának elkerülése érdekében ne nyissa meg túl gyorsan a bemenő vagy az elmenő szelepet, és ne tegye ki az egységet nagy nyomáskülönbségnek.

LV

1. Lēnām atveriet ieplūdes vārstu, lai iekārtā pamazām paaugstinātu spiedienu.
2. Lēnām atveriet izplūdes vārstu, lai caurulēs plūsmas virzienā samazinātu spiedienu

Neatveriet ieplūdes un izplūdes vārstus strauji, pretējā gadījumā attiecīgajā iekārtā var rasties pārmērīgi liels spiediens vai tā var sabojāties.

LT

1. Lėtai atidarydami įleidimo vožtuvą, palaipsniui sudarykite slėgį įrenginyje.
2. Lėtai atidarydami išleidimo vožtuvą, iš naujo sudarykite slėgį pasroviui esančiame vamzdyne

Negalima staigiai atidaryti įleidimo ar išleidimo vožtuvų, nei paveikti įrenginio pernelyg dideliu diferencialiniu slėgiu, nes galima sugadinti įrangą.

RU

1. Впускной клапан следует открывать плавно, чтобы постепенно создать давление в устройстве.
2. Плавно откройте впускной клапан, чтобы создать давление в системе трубопровода

Запрещено резко открывать впускной или выпускной клапаны, а также используемое устройство, так как это может привести к перепаду давления и повреждениям.

SL

1. Za počasno dajanje pod pritisk počasi odprite dovodni ventil.
2. Počasi odprite dovodni ventil za ponovno dajanje spodnjih cevi pod pritisk.

Dovodne ali odvodne ventile odpirajte počasi in enote ne izpostavljajte prevelikim nihanjem tlaka, saj lahko to povzroči škodo.

TR

1. Giriş valfini yavaşça açıp üniteye yavaş yavaş basınç uygulayın.
2. Mensap tarafındaki borulara yeniden basınç uygulamak için çıkış valfini yavaşça açın

Giriş ve çıkış valflerini hızla açmayın ve üniteyi aşırı basınç farklarına maruz bırakmayın; aksi halde hasar görebilir.

MT

1. Iftaħ il-valv tad-dħul bil-mod, biex bil-mod tiżdied il-pressjoni fit-tagħmir.
2. Iftaħ il-valv tal-ħruġ bil-mod biex terġa' tibni l-pressjoni fil-pajps li jwasslu 'l isfel

Ara li ma tiftaħx il-valvs tad-dħul jew tal-ħruġ f'daqqa jew b'xi mod tikkawża differenza eċċessiva fil-pressjoni tat-tagħmir għax tista' tagħmel il-ħsara.

RO

1. Deschide¸i lent supapa de admisie, pentru a presuriza gradat aparatul.
2. Deschide¸i lent supapa de evacuare pentru a represuriza sistemul de conducte din aval

Nu deschide¸i rapid supapele de admisie sau de evacuare ƒi nu supune¸i aparatul la o diferen¸„ excesiv„ de presiune; Ón caz contrar, aparatul poate suferi deterior„ri

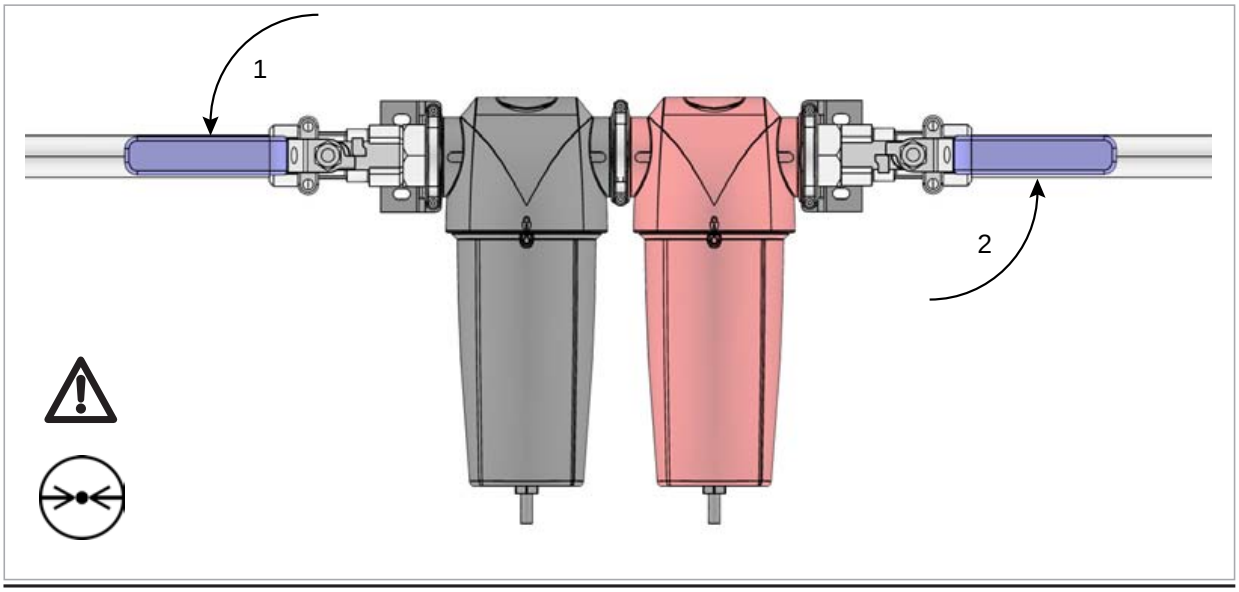

4. Accessories

• **Toebehoren** • Zubehör • **Accessoires** • Lisävarusteet • **Tillbehör** • Tilbehør • **Tilbehør** • Εξαρτήματα • **Accesorios** • Acessórios • **Accessori** • Wyposażenie • Príslušenstvo • Příslušenství • Tarvikud • Tartozékok • Piederumi • Priedai • Принадлежности • Dodatna oprema • **Aksesuarlar** • Аċċessorji • **Accesorii**

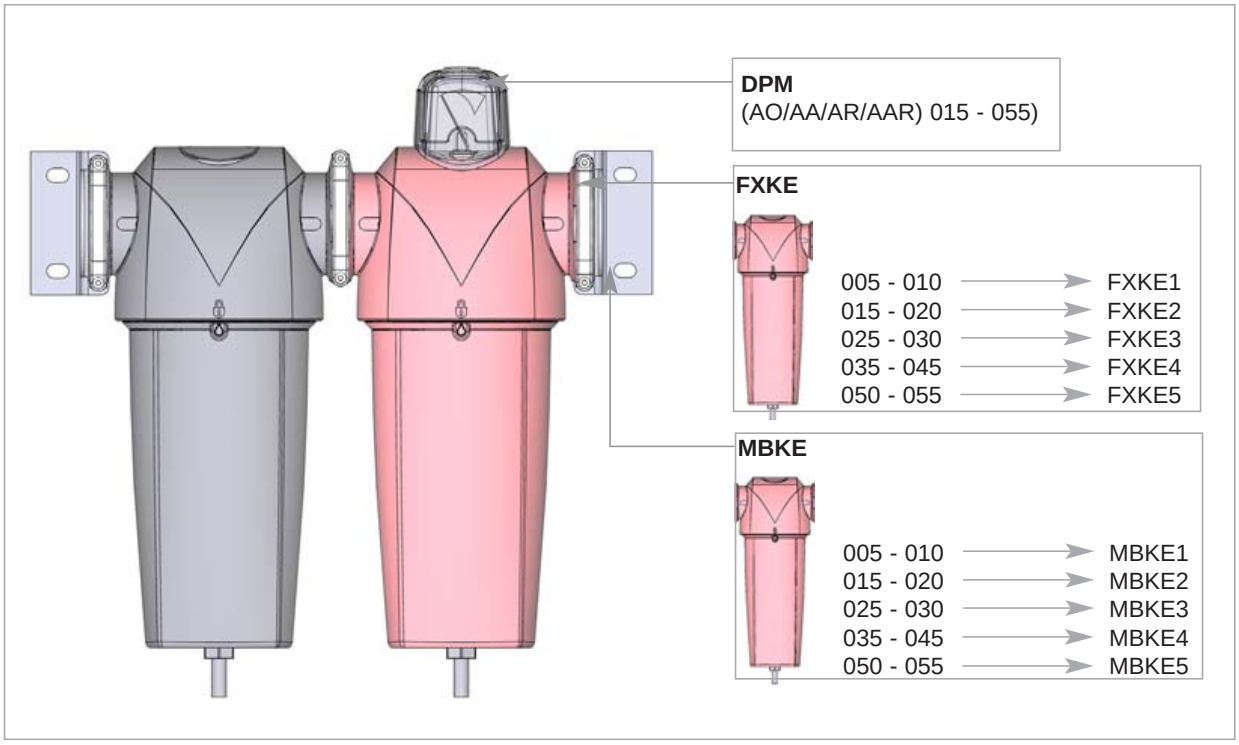

AO, AA, ACS, AR, AAR 005 - 055

5. Spare Parts (Service Kits)

• **Reserve-onderdelen (servicekits)** • Ersatzteile (Service-Kits) • **Pièces de rechange (nécessaires d'entretien)** • Varaosat (Huoltopakkaukset) • **Reservdelar (servicesatser)** • Reservedeler (service-sett) • **Reservedele (Servicekit)** • Ανταλλακτικά (Πακέτα τεχνικής υποστήριξης) • **Piezas de repuesto (kits de mantenimiento)** • Peças Sobressalentes (Kit de Reparação) • **Ricambi (kit per l'assistenza)** • Części zamienne (zestawy serwisowe) • Náhradné diely (Servisná súprava) • Náhradní díly (Sady pro údržbu) • Varuosad (hooldekomplektid) • Pótalkatrészek (szervizkészletek) • Rezerves daļas (apkopes komplekti) • Atsarginės dalys (priežiros detalių komplektai) • Запасные части (ЗИП) • Nadomestni deli (servisni kompleti) • **Yedek parça (Servis kitleri)** • Partijiet Ghat-Tibdil (Kitts tas-Servizz) • **Piese de schimb (Truse de service)**



EF1

- **AUTOMATIC DRAIN**
- **AUTOMATISCHER ABLAUF**
- **VIDANGE AUTOMATIQUE**
- **AUTOMISCHAFTAPPEN**
- **DRENAJE AUTOMATICO**
- **SCARIO AUTOMATICO**
- **AUTOMATISK AFLØB**
- **DRENO AUTOMÁTICO**
- ΑΥΤΟΜΑΤΗ ΑΠΟΣΤΡΑΓΓΙΣΗ
- **AUTOMATDRÄNERING**
- **AUTOMAATTINEN**
- **TYHJENNYSKAPPALE**
- DREN AUTOMATYCZNY
- AUTOMATICKÉ VYSUŠENIE
- AUTOMATICKÉ VYPOUŠTĚNÍ
- AUTOMAATNE VÄLJALASE
- AUTOMATIKUS LEERESZTÉS
- AUTOMĀTISKA IZTECINĀŠANA
- AUTOMATINIS IŠLEIDIMAS
- АВТОМАТИЧЕСКИЙ ДРЕНАЖ
- SAMODEJNI ODTOK
- **OTOMATİK SÜZDÜRÜCÜ**
- **DREJN AWTOMATIKU**
- **EVACUARE AUTOMAT√**

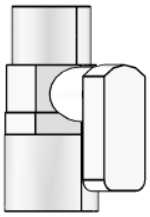

EM1

- **MANUAL DRAIN**
- **MANUELLER ABLAUF**
- **VIDANGE MANUELLE**
- **MANUEEL AFTAPPEN**
- **DRENAJE MANUAL**
- **SCARIO MANUALE**
- **MANUELT AFLØB**
- **DRENO MANUAL**
- ΧΕΙΡΟΚΙΝΗΤΗ ΑΠΟΣΤΡΑΓΓΙΣΗ
- **MANUELL DRÄNERING**
- **KÄSIKÄYTTÖINEN**
- **TYHJENNYSKAPPALE**
- DREN RĘCZNY
- RUČNÉ VYSUŠENIE
- RUČNÍ VYPOUŠTĚNÍ
- KÄSITSI VÄLJALASE
- KÉZI LEERESZTÉS
- MANUĀLA IZTECINĀŠANA
- RANKINIS IŠLEIDIMAS
- ДРЕНАЖ ВРУЧНУЮ
- ROČNI ODTOK
- **ELLE KULLANILACAK SÜZDÜRÜCÜ**
- **DREJN MANWALI**
- **EVACUARE MANUAL√**

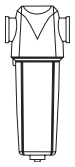
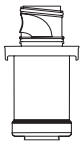

AO005A	005AO
AO005B	005AO
AO005C	005AO
AO010A	010AO
AO010B	010AO
AO010C	010AO
AO015B	015AO
AO015C	015AO
AO020C	020AO
AO020D	020AO
AO020E	020AO
AO025D	025AO
AO025E	025AO
AO030E	030AO
AO030F	030AO
AO030G	030AO
AO040G	040AO
AO040H	040AO
AO045H	045AO
AO050I	050AO
AO050J	050AO
AO055I	055AO
AO055J	055AO

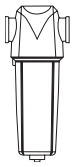
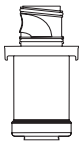

AA005A	005AA
AA005B	005AA
AA005C	005AA
AA010A	010AA
AA010B	010AA
AA010C	010AA
AA015B	015AA
AA015C	015AA
AA020C	020AA
AA020D	020AA
AA020E	020AA
AA025D	025AA
AA025E	025AA
AA030E	030AA
AA030F	030AA
AA030G	030AA
AA040G	040AA
AA040H	040AA
AA045H	045AA
AA050I	050AA
AA050J	050AA
AA055I	055AA
AA055J	055AA

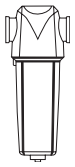


ACS005A	005ACS
ACS005B	005ACS
ACS005C	005ACS
ACS010A	010ACS
ACS010B	010ACS
ACS010C	010ACS
ACS015B	015ACS
ACS015C	015ACS
ACS020C	020ACS
ACS020D	020ACS
ACS020E	020ACS
ACS025D	025ACS
ACS025E	025ACS
ACS030E	030ACS
ACS030F	030ACS
ACS030G	030ACS
ACS040G	040ACS
ACS040H	040ACS
ACS045H	045ACS
ACS050I	050ACS
ACS050J	050ACS
ACS055I	055ACS
ACS055J	055ACS

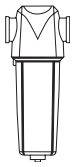
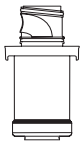

AR005A	005AR
AR005B	005AR
AR005C	005AR
AR010A	010AR
AR010B	010AR
AR010C	010AR
AR015B	015AR
AR015C	015AR
AR020C	020AR
AR020D	020AR
AR020E	020AR
AR025D	025AR
AR025E	025AR
AR030E	030AR
AR030F	030AR
AR030G	030AR
AR040G	040AR
AR040H	040AR
AR045H	045AR
AR050I	050AR
AR050J	050AR
AR055I	055AR
AR055J	055AR

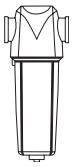


AAR005A	005AAR
AAR005B	005AAR
AAR005C	005AAR
AAR010A	010AAR
AAR010B	010AAR
AAR010C	010AAR
AAR015B	015AAAR
AAR015C	015AAR
AAR020C	020AAR
AAR020D	020AAR
AAR020E	020AAR
AAR025D	025AAR
AAR025E	025AAR
AAR030E	030AAR
AAR030F	030AAR
AAR030G	030AAR
AAR040G	040AAR
AAR040H	040AAR
AAR045H	045AAR
AAR050I	050AAR
AAR050J	050AAR
AAR055I	055AAR
AAR055J	055AAR

EMAK1	005 - 010
EMAK2	015 - 020
EMAK3	025 - 030
EMAK4	035 - 045
EMAK5	050 - 055

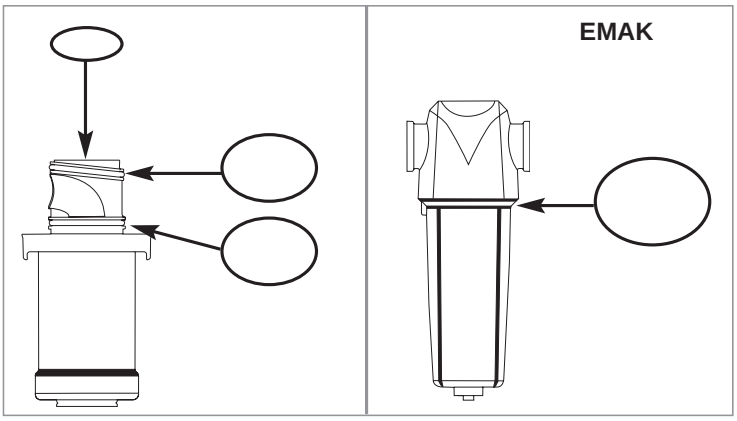

6. Maintenance

• **Onderhoud** • Wartung • **Entretien** • Kunnossapito • **Underhåll** • Vedlikehold • **Vedligeholdelse** • Συντήρηση • **Mantenimiento** • Manutenção • **Manutenzione** • Konserwacja • Údržba • Údržba • Hooldus • Karbantartás • Tehniskā apkope • Techninė priežiūra • Обслуживание • Vzdrževanja • **Bakım** • Manutenzjoni • **Întreținere**

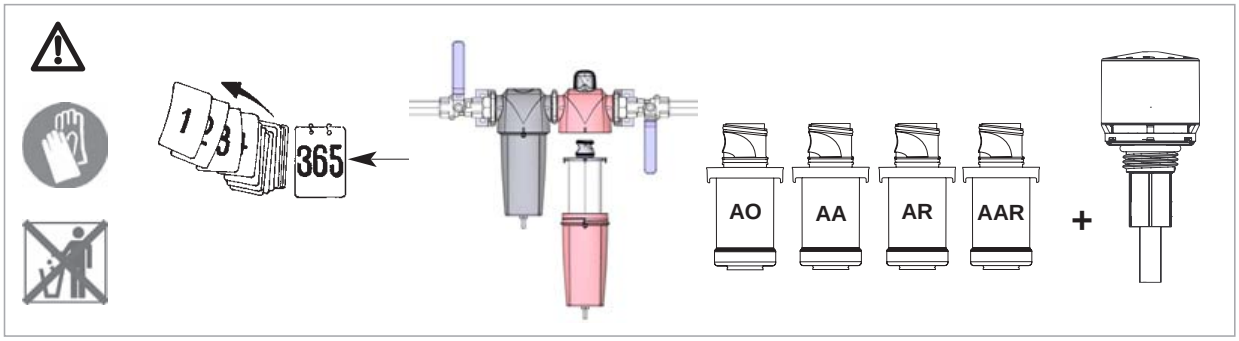

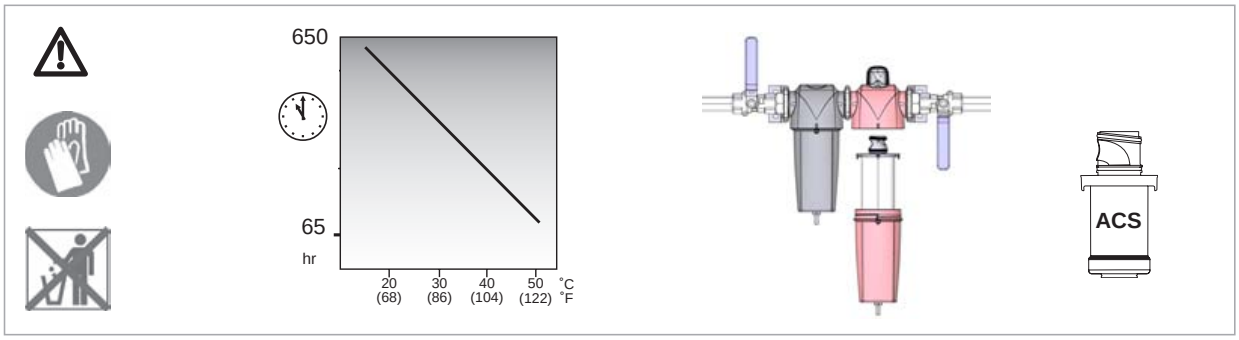

1

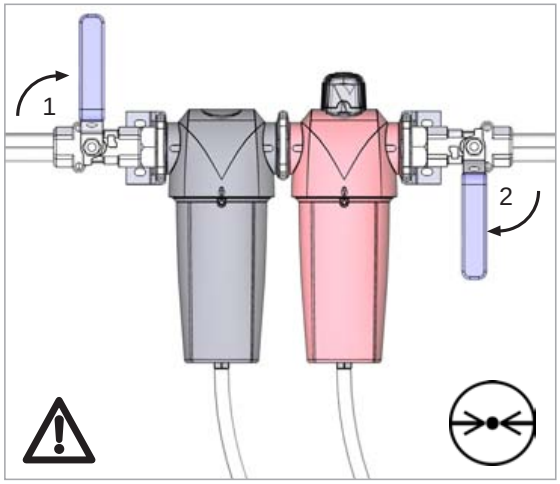

2

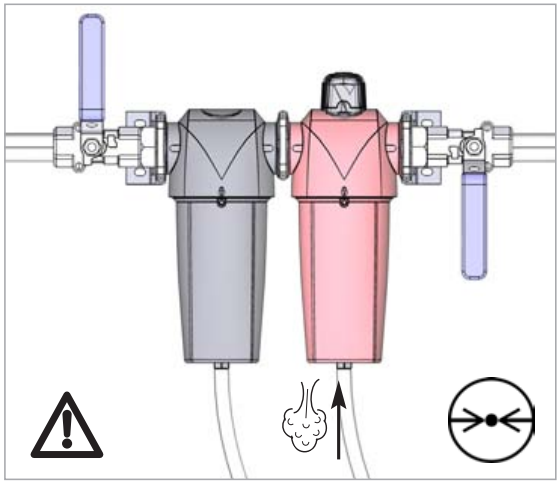

3

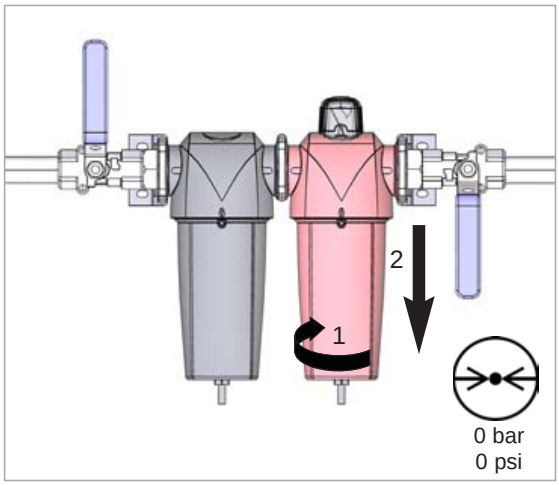

4

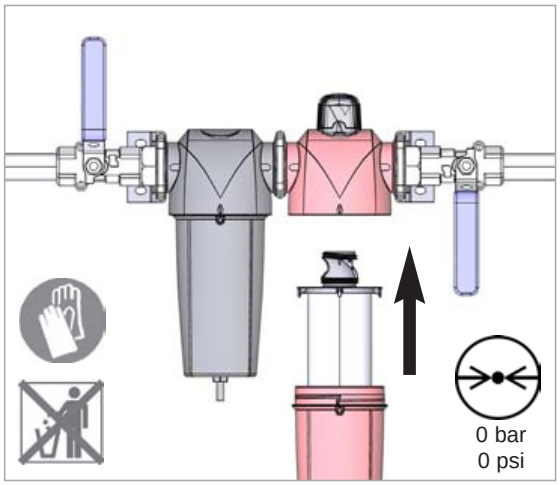

5

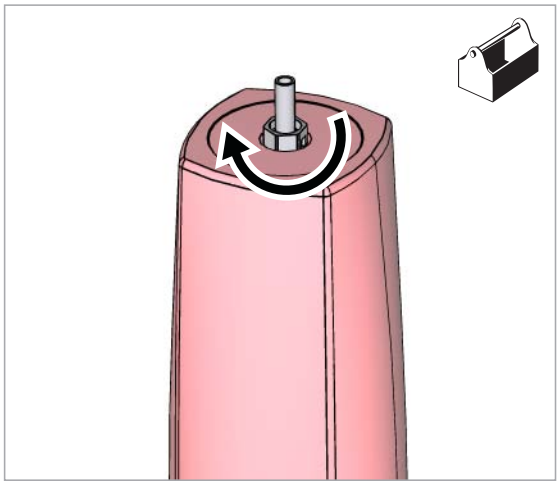

6

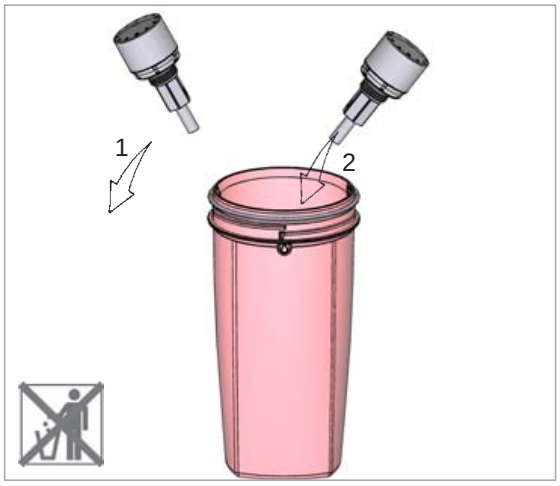

7

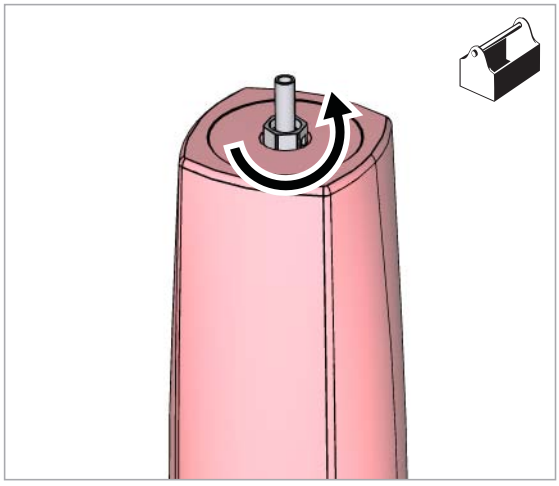

8

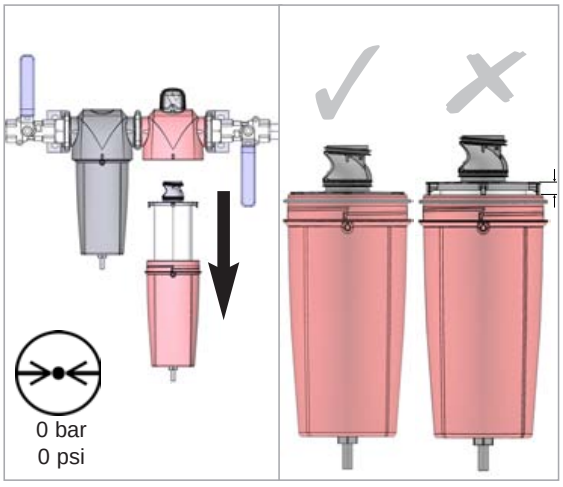

9

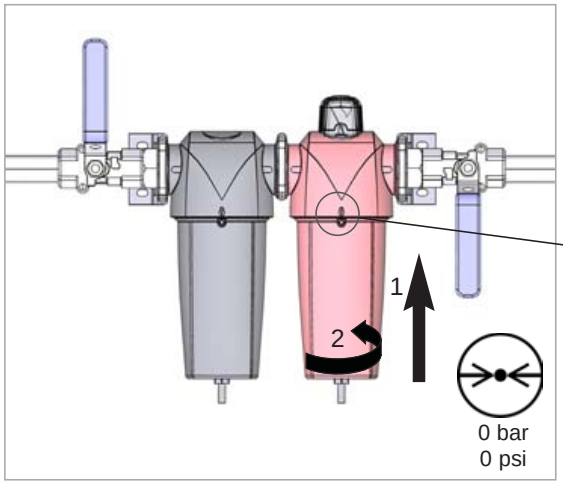

10

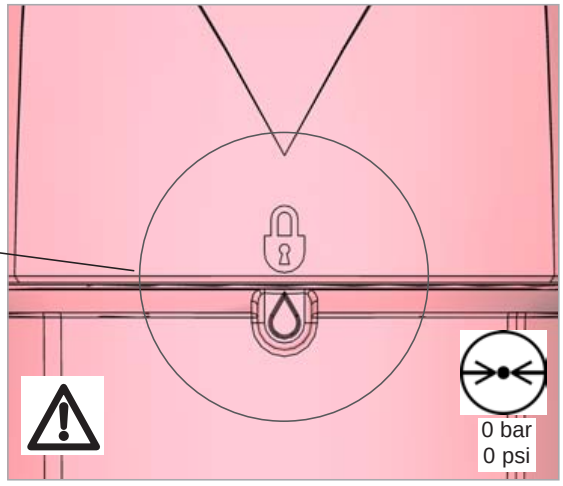

11

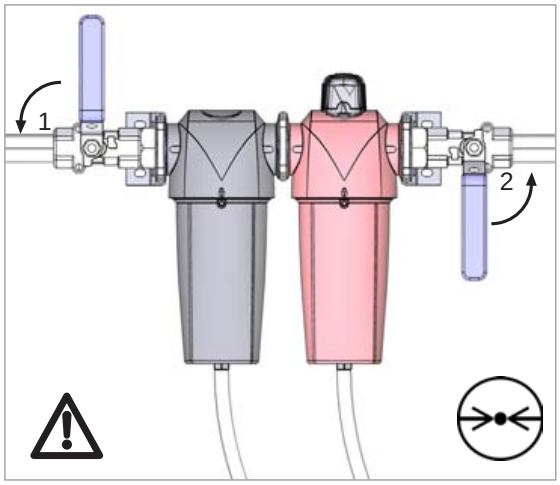

12

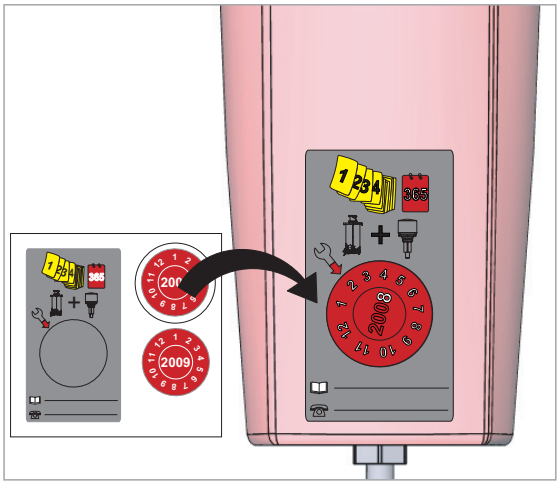

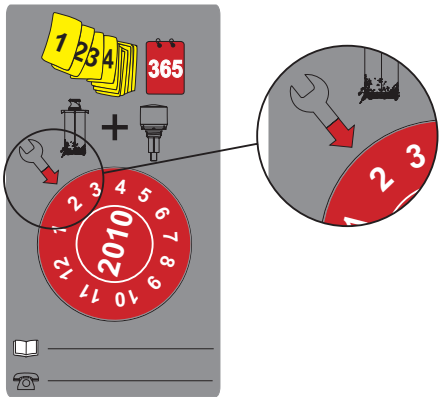

(EN) Align the arrow to the month and year of the next ervice
(NL) Breng de pijl op een lijn met de maand en het jaar van de volgende onderhoud beurt
(DE) Stellen Sie den Pfeil auf Monat und Jahr de näch ten Wartung termin Alignez la flèche ur
(FR) le moi et l'année de la prochaine révi ion
(FI) Kohdi ta nuoli euraavan huollon kuukauteen ja vuoteen
(SV) Rikta pilen mot månaden och året för nä ta ervice
(NO) Ju ter pilen til måneden og året for ne te ervice
(DA) Stil pilen på måned og år for næ te ervice
(EL) Ευθυγραμμίστε το βέλος με το μήνα και έτος του επόμενου σέρβις
(ES) Alinee la flecha con el me y año de la iguiente revi ión
(PT) Alinhe a eta com o mê e o ano da próxima intervenção técnica
(IT) Allineare la freccia in corri pondenza del me e e anno del pro imo intervento di a i tenza
(PL) Należy ustawić strzałkę na miesiąc i rok daty następnego serwisu
(SK) Šípku nasmerujte na mesiac a rok nasledujúcej opravy
(CS) Umístěte šipku na měsíc a rok příští prohlídky
(ET) Joondage nool järgmi e hooldu e kuu ja aa taga
(HU) Irányítsa a nyilat a következő szerviz hónapjára és évére
(LV) Irányítsa a nyilat a következő szerviz hónapjára és évére
(LT) Nustatykite rodyklę ties kitos techninės priežiūros mėnesiu ir metais
(RU) Совместите стрелку с месяцем и годом следующего обслуживания
(SL) Puščico nastavite na mesec in leto naslednjega servisa
(TR) Oku bir sonraki servis işleminin ay ve yılına hizalayın
(MT) Allinja l-vleġġa għax-xahar u s-sena tas-servis li jmiss
(RO) Aliniați săgeata în dreptul lunii și al anului următoarei vizite de service



ФЕДЕРАЛЬНАЯ СЛУЖБА
ПО ЭКОЛОГИЧЕСКОМУ, ТЕХНОЛОГИЧЕСКОМУ И АТОМНОМУ НАДЗОРУ

РАЗРЕШЕНИЕ

№ РРС 00-32481

На применение

Оборудование (техническое устройство, материал):
Оборудование, работающее под давлением, в соответствии с перечнем в приложении к настоящему разрешению.

Код ОКП (ТН ВЭД): Оборудование комплектное, коды ОКП (ТН ВЭД) в соответствии с технической документацией.

Изготовитель (поставщик): Фирма "Parker Hannifin Ltd. domnick hunter division" (Великобритания).

Основание выдачи разрешения: Техническая документация, заключение экспертизы промышленной безопасности ООО "ХАНК" № 419-840-2008 от 27.10.2008 г., сертификаты соответствия ОС ООО "ХАНК" № РОСС GB.ГС03.В00284 - №РОСС GB.ГС03.В00286 от 29.10.2008 г.

Условия применения:
1. Оформление технической документации на оборудование (паспортов, чертежей, инструкций по монтажу и эксплуатации) в соответствии с требованиями действующих в России правил промышленной безопасности на русском языке.
2. Осуществление монтажа, ввода в работу и эксплуатации оборудования в соответствии с требованиями "Правил устройства и безопасной эксплуатации сосудов, работающих под давлением".

Срок действия разрешения до 17.12.2013

Дата выдачи 17.12.2008

Заместитель руководителя
Б.А. Красных

АА 009261

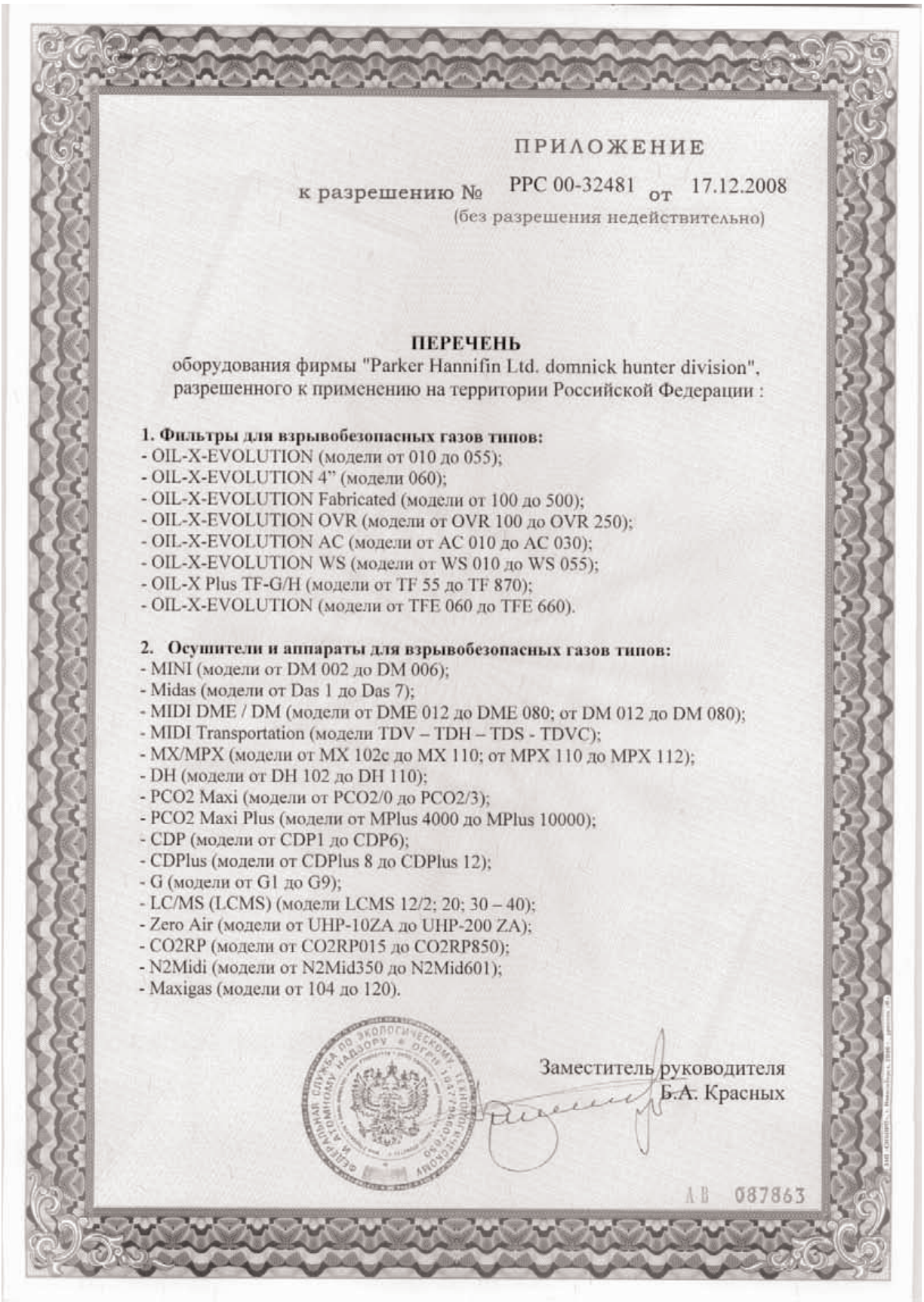

ПРИЛОЖЕНИЕ

к разрешению № РРС 00-32481 от 17.12.2008

(без разрешения недействительно)

ПЕРЕЧЕНЬ

оборудования фирмы "Parker Hannifin Ltd. domnick hunter division", разрешенного к применению на территории Российской Федерации :

1. Фильтры для взрывобезопасных газов типов:
- OIL-X-EVOLUTION (модели от 010 до 055);
- OIL-X-EVOLUTION 4" (модели 060);
- OIL-X-EVOLUTION Fabricated (модели от 100 до 500);
- OIL-X-EVOLUTION OVR (модели от OVR 100 до OVR 250);
- OIL-X-EVOLUTION AC (модели от AC 010 до AC 030);
- OIL-X-EVOLUTION WS (модели от WS 010 до WS 055);
- OIL-X Plus TF-G/H (модели от TF 55 до TF 870);
- OIL-X-EVOLUTION (модели от TFE 060 до TFE 660).

2. Осушители и аппараты для взрывобезопасных газов типов:
- MINI (модели от DM 002 до DM 006);
- Midas (модели от Das 1 до Das 7);
- MIDI DME / DM (модели от DME 012 до DME 080; от DM 012 до DM 080);
- MIDI Transportation (модели TDV – TDH – TDS - TDVC);
- MX/MPX (модели от MX 102c до MX 110; от MPX 110 до MPX 112);
- DH (модели от DH 102 до DH 110);
- PCO2 Maxi (модели от PCO2/0 до PCO2/3);
- PCO2 Maxi Plus (модели от MPlus 4000 до MPlus 10000);
- CDP (модели от CDP1 до CDP6);
- CDPlus (модели от CDPlus 8 до CDPlus 12);
- G (модели от G1 до G9);
- LC/MS (LCMS) (модели LCMS 12/2; 20; 30 – 40);
- Zero Air (модели от UHP-10ZA до UHP-200 ZA);
- CO2RP (модели от CO2RP015 до CO2RP850);
- N2Midi (модели от N2Mid350 до N2Mid601);
- Maxigas (модели от 104 до 120).

Заместитель руководителя
Б.А. Красных

АВ 087863

Declaration of Conformity **EN**

Parker Hannifin ltd domn ck hunter divis on
Dukesway TVTE Gateshead Tyne & Wear NE11 0PZ UK

OIL X Evolution
AO AA ACS AR AAR 005 010 015 020 025 030
AO AA ACS AR AAR 035 040 045
AO AA ACS AR AAR 050 055

Directives	97 23/EC
Standards used	Genera ly in accordance wi h ASMEVIII Div 1 2004
PED Assessment Route	Article 3 3 (AO AA ACS AAR 005 010 015 020 025 030) Module A (AO AA ACS AAR 035 040 045) Module B (AO AA ACS AR AAR 050 055)
Notified body for PED	Lloyds Register Ve if cation 71 Fenchurch St London EC3M 4BS
EC Type exam nat on Certificate	COV0413459/TEC
Authorised Representative	Derek Bank er Divisional Qual ty Manager Parker Hannifin ltd domn ck hunter d v s on

Declaration

I declare that as the author sed representat ve he above information n relation to the supply / manufacture of this product s n conformity wi h he standards and o her related documents fo low ng the provisions of the above D rect ves

Signature **Date** 8/8/2007

Declaration Number 0002/8807

Déclaration de conformité **FR**

Parker Hannifin ltd domn ck hunter division
Dukesway TVTE Gateshead Tyne & Wear NE11 0PZ UK

OIL X Evolution
AO AA ACS AR AAR 005 010 015 020 025 030
AO AA ACS AR AAR 035 040 045
AO AA ACS AR AAR 050 055

Directives	97/23 EC
Normes utilisées	Géné alement conforme à ASMEVIII d v 1 2004
Mé hode d'évaluation de la directive d'équipements de pression	Article 3 3 (AO AA ACS AAR 005 010 015 020 025 030) Module A (AO AA ACS AAR 035 040 045) Module B (AO AA ACS AR AAR 050 055)
Organisme de notificat on pour la directive d'équipement sous pression	Lloyds Reg ster Ver fication 71 Fenchurch St London EC3M 4BS
Certificat d'examen de type CE	COV0413459/TEC
Représentant agréé	Derek Bankier D v s onal Quality Manager Parker Hannif n td domn ck hunter division

Déclaration

Je déclare à titre de représentant agréé que les informations ci dessus liées à la fourniture/fabrication de ce produit sont en conformité avec les normes et autres documents l és décla és selon les dispos tions des d rect ves susment onnées

S gnature **Date** 8/8/2007

N° de déclaration 0002/8807

Verklaring van Conformiteit **NL**

Parker Hannifin ltd domn ck hunter divis on
Dukesway TVTE Gateshead Tyne & Wear NE11 0PZ UK

OIL X Evolution
AO AA ACS AR AAR 005 010 015 020 025 030
AO AA ACS AR AAR 035 040 045
AO AA ACS AR AAR 050 055

Richtlijnen	97 23/EC
Gehanteerde normen	Gewoonlijk volgens ASMEV II D v 1 2004
PED beoordelingstraject	Artikel 3 3 (AO AA ACS AAR 005 010 015 020 025 030) Module A (AO AA ACS AAR 035 040 045) Module B (AO AA ACS AR AAR 050 055)
Aangemelde instantie voor PED	Lloyds Register Ver fication 71 Fenchu ch St London EC3M 4BS
EC Type onderzoekscertif caat	COV0413459/TEC
Bevoegde vertegenwoord ger	Derek Bankier D v s onal Quality Manager Parker Hannifin ltd domn ck hunter d v s on

Verklar ng

Als bevoegde vertegenwoord ger verklaar k dat bovenstaande informatie met betrekking tot de levering / vervaard ging van dit product overeenstemt met de normen en andere b jbehorende documentatie volgens de bepalingen van bovengenoemde richtlijnen

Handtekening **Datum** 8/8 2007

Verklaringnummer 0002/8807

Vaatimustenmukaisuusvakuutus **FI**

Parker Hannifin ltd domn ck hunter division
Dukesway TVTE Gateshead Tyne & Wear NE11 0PZ UK

OIL X Evolution
AO AA ACS AR AAR 005 010 015 020 025 030
AO AA ACS AR AAR 035 040 045
AO AA ACS AR AAR 050 055

Direkti vit	97/23/EC
Käytetyt standardit	Yleensä seuraavan standardin muka sesti ASMEV II D v 1 2004
PED arviointi menettely	Art kla 3 3 (AO AA ACS AAR 005 010 015 020 025 030) Moduuli A (AO AA ACS AAR 035 040 045) Moduuli B (AO AA ACS AR AAR 050 055)
PED säännösten lmoitettu laitos	Lloyds Reg ster Verificat on 71 Fenchurch St London EC3M 4BS
EY tyyppihyväksynnän sertifikaatti	COV0413459 TEC
Valtuutettu edustaja	Derek Bank er Divisional Qual ty Manager Parker Hann fin ltd domnick hunter d v s on

Vakuutus

Valtuutettuna edustajana vakuutan e tä y lä olevat tiedot jotka l ittyvät tämän tuotteen toimi tamiseen tai valm stamiseen ovat standardien ja muiden asiaan l ittyvien as akirjoien mukaisia ja noudattavat yllä ma n ttuja d rekti vejä

Allek rjoitus **Pä väys** 8 8/2007

Vakuutuksen numero 0002/8807

Konformitätserk ärung **DE**

Parker Hannifin ltd domn ck hunter divis on
Dukesway TVTE Gateshead Tyne & Wear NE11 0PZ UK

OIL X Evolution
AO AA ACS AR AAR 005 010 015 020 025 030
AO AA ACS AR AAR 035 040 045
AO AA ACS AR AAR 050 055

Richtlinien	97/23/EC
Angewandte Normen	Allgemein in Übere nst mmung m t ASMEVIII Div 1 2004
Beurteilungsroute der Druckgeräter chtlinie	Art kel 3 3 (AO AA ACS AAR 005 010 015 020 025 030) Modul A (AO AA ACS AAR 035 040 045) Modul B (AO AA ACS AR AAR 050 055)
Benannte Stelle für die Druckgeräter chtlinie	Lloyds Reg ster Verificat on 71 Fenchurch St London EC3M 4BS
EG Baumusterprüfbesche nigung	COV0413459 TEC
Bevollmächtigter Vertreter	Derek Bank er Divisional Qual ty Manager Parker Hann fin ltd domnick hunter d v s on

Erklärung

Hiermit erklä e ch als bevollmächtigter Vertreter die Konformität der oben aufgeführten Informationen in Bezug auf die Lieferung/Herste lung d eses Produkts mit den Normen und ande en zugehörigen Dokumenten gemäß den Best mmungen der oben genannten R chtlin en

Unterschrift **Datum** 8 8/2007

Nummer der Erklärung 0002 8807

Försäkran om överensstämmelse **SV**

Parker Hannifin ltd domn ck hunter division
Dukesway TVTE Gateshead Tyne & Wear NE11 0PZ UK

OIL X Evolution
AO AA ACS AR AAR 005 010 015 020 025 030
AO AA ACS AR AAR 035 040 045
AO AA ACS AR AAR 050 055

Direktiv	97/23 EC
Använda standarder	Gene el t i enl ghet med ASMEVIII Div 1 2004
Fastställningsväg för PED	Artikel 3 3 (AO AA ACS AAR 005 010 015 020 025 030) Modul A (AO AA ACS AAR 035 040 045) Modul B (AO AA ACS AR AAR 050 055)
Anmält organ för PED	Lloyds Reg ster Ver fication 71 Fenchurch St London EC3M 4BS
EG intyg om typprovning	COV0413459/TEC
Auktoriserad representant	Derek Bankier D v s onal Quality Manager Parker Hannif n td domn ck hunter division

Försäkran

Jag försäkrar i egenskap av auktoriserad representant att ovannämnda info mation avseende leverans ti lverkn ng av denna produkt öve ensstämmer med standarder och övriga relaterade dokument enligt vil koren i ovanstående d rekt v

Underskrift **Datum** 8/8/2007

Försäkran nummer 0002/8807

Konformitetserk ær ng **NO**

Parker Hannifin ltd domn ck hunter divis on
Dukesway TVTE Gateshead Tyne & Wear NE11 0PZ UK

OIL X Evolution
AO AA ACS AR AAR 005 010 015 020 025 030
AO AA ACS AR AAR 035 040 045
AO AA ACS AR AAR 050 055

Direktiver	97 23/EC
Benyttede standarder	Hovedsakelig i samsvar med ASMEVIII d v 1 2004
Rute for vurdering av PED (d rekt vet for trykkpålagt utstyr)	Paragraf 3 3 (AO AA ACS AAR 005 010 015 020 025 030) Modul A (AO AA ACS AAR 035 040 045) Modul B (AO AA ACS AR AAR 050 055)
Underrettet organ for PED	Lloyds Register Ver fication 71 Fenchu ch St London EC3M 4BS
EC typegodkjenn ngssertifikat	COV0413459/TEC
Autorisert representant	Derek Bankier D v s onal Quality Manager Parker Hannifin ltd domn ck hunter d v s on

Erklæring

Jeg erklærer som autor sert representant at nformasjonen ovenfor med hensyn til levering/produksjon av dette produktet er i overensstemmelse med standardene og and e relaterte dokumenter følge bestemmelsene i direkt vene ovenfor

Signatur **Dato** 8/8/2007

Erklæring nr 0002/8807

Declaración de conformidad **ES**

Parker Hannifin ltd domn ck hunter division
Dukesway TVTE Gateshead Tyne & Wear NE11 0PZ UK

OIL X Evolution
AO AA ACS AR AAR 005 010 015 020 025 030
AO AA ACS AR AAR 035 040 045
AO AA ACS AR AAR 050 055

Directivas	97 23 EC
Normas ut lizadas	Generalmente de conform dad con ASMEVIII Div 1 2004
Ruta de evaluación de la normativa PED	Artículo 3 3 (AO AA ACS AAR 005 010 015 020 025 030) Módulo A (AO AA ACS AAR 035 040 045) Módulo B (AO AA ACS AR AAR 050 055)
Organismo not ficado para la normativa PED	Lloyds Register Ver fication 71 Fenchurch St London EC3M 4BS
Cert ficado de examen CE de t po	COV0413459/TEC
Representante autorizado	Derek Bankier D v s onal Quality Manager Parker Hannifin ltd domn ck hunter division

Declarac ón

Como representante autorizado declaro que la información anter ormente expuesta en relac ón con el sum n stro y/o fabr cac ón de este p oducto cumple las normativas ndicadas y otros documentos afines según las disposiciones de las Direct vas c tadas anteriormente

Firma **Fecha** 8 8/2007

Número de declaración 0002/8807

Overensstemmelseserklæring **DA**

Parker Hannifin ltd domn ck hunter divis on
Dukesway TVTE Gateshead Tyne & Wear NE11 0PZ UK

OIL X Evolution
AO AA ACS AR AAR 005 010 015 020 025 030
AO AA ACS AR AAR 035 040 045
AO AA ACS AR AAR 050 055

Direktiver	97/23 EC
Anvendte standarder	Generelt i overensstemmelse med ASMEVIII div 1 2004
Forløb for PED bedømmelse	Artikel 3 3 (AO AA ACS AAR 005 010 015 020 025 030) Modul A (AO AA ACS AAR 035 040 045) Modul B (AO AA ACS AR AAR 050 055)
Not ficeret organ for PED	Lloyds Reg ster Ver fication 71 Fenchurch St London EC3M 4BS
EF typeafprøvningsattest	COV0413459/TEC
Autoriseret repræsentant	Derek Bankier D v s onal Quality Manager Parker Hannif n td domn ck hunter division

Erklæring

Jeg erklærer hermed som autor seret repræsentant at ovennævnte oplysninger ved arende levering/produkt on af dette produkt er i overensstemmelse med de anførte standarder og øvrige tilknyttede dokumenter i henhold t l bestemmelserne i ovenstående d rekt ver

Underskrift **Dato** 8/8/2007

Erklær ngsnummer 0002/8807

Declaração de Conformidade **PT**

Parker Hannifin ltd domn ck hunter division
Dukesway TVTE Gateshead Tyne & Wear NE11 0PZ UK

OIL X Evolution
AO AA ACS AR AAR 005 010 015 020 025 030
AO AA ACS AR AAR 035 040 045
AO AA ACS AR AAR 050 055

Directivas	97/23/EC
Padrões utilizados	De forma geral em concordânc a com ASMEV II D v 1 2004
Percurso de Aval ação do PED	Artigo 3 3 (AO AA ACS AAR 005 010 015 020 025 030) Módulo A (AO AA ACS AAR 035 040 045) Módulo B (AO AA ACS AR AAR 050 055)
Not ficado para o PED	Lloyds Reg ster Ver ficat on 71 Fenchurch St London EC3M 4BS
Cert ficado de Inspecção Tipo CE	COV0413459 TEC
Revendedor Autorizado	Derek Bankier D v s onal Quality Manager Parker Hannif n td domnick hunter division

Declaração

Declaro na qualidade de representante auto izado que as nformações acima contidas referentes ao fornec mento / fabrico deste produto estão em conformidade com as normas e outros documentos relac onados de acordo com as dispos ções das Directivas anteriores

Assinatura **Data** 8/8/2007

Número da Declaração 0002/8807

Δήλωση συμμόρφωσης **EL**

Parker Hannifin ltd domn ck hunter divis on
Dukesway TVTE Gateshead Tyne & Wear NE11 0PZ UK

OIL X Evolution
AO AA ACS AR AAR 005 010 015 020 025 030
AO AA ACS AR AAR 035 040 045
AO AA ACS AR AAR 050 055

Οδηγίες	97 23/EC
Πρότυπα που χρησιμοποιήθηκαν	Γεν κά σε συμφων α με το ASMEVIII Div 1 2004
Δ αδρομή αξιολόγησης για κανον σμούς PED	Άρθρο 3 3 (AO AA ACS AAR 005 010 015 020 025 030) Ενότητα A (AO AA ACS AAR 035 040 045) Ενότητα B (AO AA ACS AR AAR 050 055)
Ενήμερος οργανισμός για κανον σμούς PED	Lloyds Register Verif cation 71 Fenchurch St London EC3M 4BS
Π στοποιητ κό εξέτασης τύπου ΕΚ	COV0413459/TEC
Εξουσιοδοτημένος αντ πρόσωπος	Derek Bankier Divisional Qual ty Manager Parker Hannifin ltd domn ck hunter divis on

Δήλωση

Δηλώνω ως ο εξουσιοδοτημένος αντ πρόσωπος ότι οι παραπάνω πληροφορ ες σε σχέση με τη δ άθεση / κατασκευή αυτού του προ όντος συμμορφώνονται ως προς τα πρότυπα και ως προς τα άλλα σχετ κά έγγραφα που συνοδεύουν τ ς δ ατάξεις των πιο πάνω οδηγ ών

Υπογραφή **Ημερομηνία** 8/8 2007

Αριθμός δήλωσης 0002/8807

Dichiarazione di conformità **IT**

Parker Hannifin ltd domn ck hunter division
Dukesway TVTE Gateshead Tyne & Wear NE11 0PZ UK

OIL X Evolution
AO AA ACS AR AAR 005 010 015 020 025 030
AO AA ACS AR AAR 035 040 045
AO AA ACS AR AAR 050 055

Direttive	97 23 EC
Norme util zzate	Generalmente confo me a ASMEVIII Div 1 2004
Procedura di valutazione PED	Articolo 3 3 (AO AA ACS AAR 005 010 015 020 025 030) Moduli A (AO AA ACS AAR 035 040 045) Moduli B (AO AA ACS AR AAR 050 055)
Organismo accreditato per PED	Lloyds Register Ver fication 71 Fenchurch St London EC3M 4BS
Attestato di certif cazione tipo CE	COV0413459/TEC
Rappresentante autor zzato	Derek Bankier D v s onal Quality Manager Parker Hannifin ltd domn ck hunter division

Dichiarazione

In qualità di rappresentante auto izzato dichiaro che le informaz oni di cui sopra in mer to alla fornitura fabbr caz one del prodotto n oggetto sono conformi alle norme ndicate e a qualsiasi a tro documento correlati a la forn tura basato su quanto prescri to dalle dire tive menzionate

Firma **Data** 8 8/2007

Dichiarazione numero 0002/8807

Deklaracja zgodności **PL**

Parker Hannifin ltd domn ck hunter divis on
Dukesway TVTE Gateshead Tyne & Wear NE11 0PZ UK

OIL X Evolution
AO AA ACS AR AAR 005 010 015 020 025 030
AO AA ACS AR AAR 035 040 045
AO AA ACS AR AAR 050 055

Dyrektywy	97/23/EC
Stosowane standardy	Ogólnie zgodny z ASMEVIII dział 1 2004
Ścieżka potwierdzania zgodności z PED	Artykuł 3 3 (AO AA ACS AAR 005 010 015 020 025 030) Moduł A (AO AA ACS AAR 035 040 045) Moduł B (AO AA ACS AR AAR 050 055)
Organ/instytucja powiadamiana na mocy PED	Lloyds Reg ster Ver ficat on 71 Fenchurch St London EC3M 4BS
Certyfikat badan a typu WE	COV0413459 TEC
Autoryzowany przedstawiciel	Derek Bankier D v s onal Quality Manager Parker Hannif n td domn ck hunter division

Deklaracja

Ośw adczam jako auto yzowany przedstawiciel że powyższe informacje dotyczące dostawy / wytworzen a niniejszego produktu są zgodne ze standardami i innymi dokumentami powiązanymi zgodn e z postanowieniami powyższych dyrektyw

Podpis **Data** 8 8/2007

Numer deklaracji 0002/8807

Vastavusdeklaratsioon **ET**

Parker Hannifin ltd domn ck hunter division
Dukesway TVTE Gateshead Tyne & Wear NE11 0PZ UK

OIL X Evolution
AO AA ACS AR AAR 005 010 015 020 025 030
AO AA ACS AR AAR 035 040 045
AO AA ACS AR AAR 050 055

Direkti vid	97/23 EC
Kasutatud standardid	Üld selt vastavuses standard ga ASMEVI I D v 1 2004
PED vastavushinnangu jaotus	A tikkel 3 3 (AO AA ACS AAR 005 010 015 020 025 030) Moodul A (AO AA ACS AAR 035 040 045) Moodul B (AO AA ACS AR AAR 050 055)
PEDist (surveseadmete direktiivist) teav tatud asutus	Lloyds Register Ver fication 71 Fenchurch St London EC3M 4BS
EÜ tüübih ndamistõend	COV0413459/TEC
Volitatud es ndaja	Derek Bankier D v s onal Quality Manager Parker Hannif n ltd domn ck hunter division

Deklaratsioon

Volitatud esindajana kinn tan et üialtoodud teave seoses antud toote tarn m se/tootmisega on vastavuses standardite ja muude seotud dokumentidega vastava t üialtoodud d rekti v de sätetele

Allkiri **Kuupäev** 8 8/2007

Deklaratsiooni number 0002/8807

Vyhlásenie o zhode **SK**

Parker Hannifin ltd domn ck hunter divis on
Dukesway TVTE Gateshead Tyne & Wear NE11 0PZ UK

OIL X Evolution
AO AA ACS AR AAR 005 010 015 020 025 030
AO AA ACS AR AAR 035 040 045
AO AA ACS AR AAR 050 055

Smern ce	97 23/EC
Použ té normy	Vo všeobecnosti v zhode s ASMEV II oddiel 1 2004
Spôsob posudzovania podľa smernice PED	Článok 3 3 (AO AA ACS AAR 005 010 015 020 025 030) Modul A (AO AA ACS AAR 035 040 045) Modul B (AO AA ACS AR AAR 050 055)
Oboznámený orgán podľa smernice PED	Lloyds Register Ver fication 71 Fenchu ch St London EC3M 4BS
Osvedčenie typovej skúšky ES	COV0413459/TEC
Splnomocnený zástupca	Derek Bankier D v s onal Quality Manager Parker Hannifin ltd domn ck hunter d v s on

Vyhlásenie

Ako splnomocnený zástupca vyhlasujem že nformácie uvedené vyššie sú v súv slosti s dodávkou / výrobou tohto výrobku v zhode s normami a nými súvisiac mi dokumentmi podľa ustanovení uvedených smern c

Podpis **Dátum** 8/8/2007

Číslo vyhlásen a 0002 8807

Megfelelőségi nyi atkozat **HU**

Parker Hannifin ltd domn ck hunter division
Dukesway TVTE Gateshead Tyne & Wear NE11 0PZ UK

OIL X Evolution
AO AA ACS AR AAR 005 010 015 020 025 030
AO AA ACS AR AAR 035 040 045
AO AA ACS AR AAR 050 055

Direktívák	97/23/EC
Alkalmazott szabványok	Á talánosan a következő alapján ASMEV II D v 1 2004
PED értékelési irányvonal	3 3 as c kkely (AO AA ACS AAR 005 010 015 020 025 030) Modulok A (AO AA ACS AAR 035 040 045) Modulok B (AO AA ACS AR AAR 050 055)
PED del kapcsolatban értes tett testület	Lloyds Reg ster Verificat on 71 Fenchurch St London EC3M 4BS
EC t pusvizsgálati bizonyítvány	COV0413459 TEC
Hivatalos képviselő	De ek Bankier Divisional Quality Manager Parker Hannif n td domnick hunter division

Nyilatkozat

Hivatalos képviselőként kijelentem hogy a termék szállításával / gyártásával kapcsolatos fent olvasható informác ók megfelelnek a fenti Direktívák elő rásai szerinti szabványoknak és egyéb kapcsolódó dokumentumoknak

Aláírás **Dátum** 8/8/2007

Nyilatkozat száma 0002/8807

Prohlášení o shodě **CS**

Parker Hannifin ltd domn ck hunter divis on
Dukesway TVTE Gateshead Tyne & Wear NE11 0PZ UK

OIL X Evolution
AO AA ACS AR AAR 005 010 015 020 025 030
AO AA ACS AR AAR 035 040 045
AO AA ACS AR AAR 050 055

Směrn ce	97 23/EC
Použ té normy	Obecně v souladu ASMEVIII Div 1 2004
Metoda stanovení shody pro tlaková zař zení (PED)	Článek 3 3 (AO AA ACS AAR 005 010 015 020 025 030) D lčí část A (AO AA ACS AAR 035 040 045) D lčí část B (AO AA ACS AR AAR 050 055)
Notif kovaný orgán pro PED	Lloyds Register Ver fication 71 Fenchu ch St London EC3M 4BS
Osvědčení o zkoušce typu ES	COV0413459/TEC
Oprávněný zástupce	Derek Bank er Divisional Qual ty Manager Parker Hann fin ltd domnick hunter d v s on

Prohlášení

Jako oprávněný zástupce prohlašuji že výše uvedené nformace týkající se dodávky /výroby tohoto produktu jsou v souladu s normami a j nými souv sej cími dokumenty vypůjvajícími z ustanovení výše uvedených směrnic

Podpis **Datum** 8/8 2007

Č slo prohlášení 0002/8807

Atbilstības deklarācija **LV**

Parker Hannifin ltd domn ck hunter division
Dukesway TVTE Gateshead Tyne & Wear NE11 0PZ UK

OIL X Evolution
AO AA ACS AR AAR 005 010 015 020 025 030
AO AA ACS AR AAR 035 040 045
AO AA ACS AR AAR 050 055

Direktīvas	97 23/EC
Izmantotie standarti	Parasti saskaņa ar ASMEVI I D v 1 2004
PED novērtējums	Pants 3 3 (AO AA ACS AAR 005 010 015 020 025 030) Modulis A (AO AA ACS AAR 035 040 045) Modulis B (AO AA ACS AR AAR 050 055)
Par PED informētā organizāc ja	Lloyds Register Ver fication 71 Fenchu ch St London EC3M 4BS
EK sastādīts Eksaminācijas sertifikāts	COV0413459/TEC
Pilnvarotais pārstāvis	Derek Bankier D v s onal Quality Manager Parker Hannifin ltd domn ck hunter d v s on

Deklarācija

Es kā pilnvarots pārstāvis ar šo pazinoju ka iepriekšminētā informācija kas a tiecas uz šī produkta piegādi / ražošanu atbilst standartiem un c tiem a bilstošiem dokumentiem saskaņā ar iep iekšm nētajām D rektīvām

Paraksts **Datums** 8/8/2007

Deklarāc jas numurs 0002/8807

Atitikties deklaracija LT

Parker Hannifin ltd domn ck hunter division
Dukesway TVTE Gateshead Tyne & Wear NE11 0PZ UK

OIL X Evolution
AO AA ACS AR AAR 005 010 015 020 025 030
AO AA ACS AR AAR 035 040 045
AO AA ACS AR AAR 050 055

Direktyvos	97 23/EC
Naudoti standartai	Atitinka bendrąsias ASMEVIII Div 1 : 2004 nuostatas
PED įvertinimo pakopa:	3 3 stra psn s (AO AA ACS AAR 005 010 015 020 025 030) Modulis A (AO AA ACS AAR 035 040 045) Modulis B (AO AA ACS AR AAR 050 055)
PED notifikuotoji institucija	Lloyds Register Ver fication 71 Fenchu ch St London EC3M 4BS
EB t po testavimo sertifikatas	COV0413459/TEC
Įgaliotasis atstovas	Derek Bankier D v s onal Quality Manager Parker Hannifin ltd domn ck hunter d v s on

Deklaracija

Aš, įgaliotasis atstovas, patvirtinu, kad aukščiau pateikta gaminio tiekimo/pagaminimo informacija atitinka aukščiau nurodytus standartus ir kitą su nurodytų direktyvų nuostatomis susijusią dokumentaciją.

Parašas **Data** 8 8/2007

Deklaracijos numeris 0002 8807

Uyum Beyanı TR

Parker Hannifin ltd domn ck hunter division
Dukesway TVTE Gateshead Tyne & Wear NE11 0PZ UK

OIL X Evolution
AO AA ACS AR AAR 005 010 015 020 025 030
AO AA ACS AR AAR 035 040 045
AO AA ACS AR AAR 050 055

Direktifler	97/23 EC
Kullanılan standartlar	Genelde ASMEV II D v 1 2004'e uygun
PED (Basınçlı Ekipman Direktifi) Değerlendirmesi Yolu	Madde 3 3 (AO AA ACS AAR 005 010 015 020 025 030) Modül A (AO AA ACS AAR 035 040 045) Modül B (AO AA ACS AR AAR 050 055)
PED için bild rimde bulunulan kuruluş:	Lloyds Reg ster Ver fication 71 Fenchurch St London EC3M 4BS
AT Tip İncelemesi Sertifikası:	COV0413459/TEC
Yetkili Temsilci	Derek Bankier D v s onal Quality Manager Parker Hannif n td domn ck hunter division

Beyan

Yetkili temsilci olarak beyan ederim ki bu ürünün teminine / üretimine ilişkin olarak yukarıda verilen bilgiler yukarıda anılan Direktiflerin hükümlerine uyan standartlara ve ilgili başka belgelere uygundur.

İmza: **Tarih:** 8/8 2007

Beyan No 0002/8807

Декларация соответствия RU

Parker Hannifin ltd domn ck hunter division
Dukesway TVTE Gateshead Tyne & Wear NE11 0PZ UK

OIL X Evolution
AO AA ACS AR AAR 005 010 015 020 025 030
AO AA ACS AR AAR 035 040 045
AO AA ACS AR AAR 050 055

Требования	97 23 EC
Применяемые стандарты	В большинстве случаев обеспечивается соответствие стандарту ASMEVIII, Раздел 1: 2004.
Система обеспечения качества PED	Статья 3.3 (AO, AA, ACS, AAR - 005, 010 015 020 025 030) Модуль A (AO, AA, ACS, AAR - 035, 040 045) Модуль B (AO, AA, ACS, AR, AAR, - 050 055)
Уполномоченный орган для PED:	Lloyds Register Ver fication 71 Fenchurch St London EC3M 4BS
Сертификат ЕС на проведение типовых испытаний:	COV0413459/TEC
Уполномоченный представитель	Derek Bankier D v s onal Quality Manager Parker Hannifin ltd domn ck hunter division

Декларация

Как уполномоченный представитель, я заявляю, что приведенная выше информация относительно поставки/производства данного продукта соответствует стандартам, другим связанным документам и положениям указанных выше требований.

Подпись: **Дата:** 8 8/2007

Номер декларации: 0002/8807

Dikjarazzjoni tal Konformità MT

Parker Hannifin ltd domn ck hunter division
Dukesway TVTE Gateshead Tyne & Wear NE11 0PZ UK

OIL X Evolution
AO AA ACS AR AAR 005 010 015 020 025 030
AO AA ACS AR AAR 035 040 045
AO AA ACS AR AAR 050 055

Direttivi	97/23 EC
Standards użati	Generalment f'konformità ma' ASMEVIII Div 1 : 2004
Rotta ta' l Assessjar tal PED	Artikolu 3 3 (AO AA ACS AAR 005 010 015 020 025 030) Modulu A (AO AA ACS AAR 035 040 045) Modulu B (AO AA ACS AR AAR 050 055)
Korp notifikat għall-PED:	Lloyds Reg ster Ver fication 71 Fenchurch St London EC3M 4BS
Ċertifikat tal-KE ta' l-eżaminazzjoni tat-Tip:	COV0413459/TEC
Rappreżentant Awtorizzat	Derek Bankier D v s onal Quality Manager Parker Hannif n td domn ck hunter division

D kjarazzjoni

Niddikjara li bħala r-rappreżentant awtorizzat, l-informazzjoni ta' hawn fuq, f'dak li għandu x'jaqsam mal-formiment/manifattura ta' dan il-prodott, hija f'konformità ma' l-istandards u d-dokumenti l-oħra relatati li jsegwu d-dispożizzjonijiet tad-Direttivi msemmija hawn fuq

Firma **Data** 8/8/2007

Numru tad Dikjarazzjoni 0002 8807

Izjava o skladnosti SL

Parker Hannifin ltd domn ck hunter division
Dukesway TVTE Gateshead Tyne & Wear NE11 0PZ UK

OIL X Evolution
AO AA ACS AR AAR 005 010 015 020 025 030
AO AA ACS AR AAR 035 040 045
AO AA ACS AR AAR 050 055

Direktive	97/23 EC
Uporabljeni standardi	Splošno skladno z ASMEVIII Div 1 2004
Ocenjevalna pot PED	Članek 3.3 (AO, AA, ACS, AAR - 005, 010, 015, 020, 025 030) Modul A (AO AA ACS AAR 035 040 045) Modul B (AO AA ACS AR AAR 050 055)
Priglašeni organ za PED	Lloyds Register Ver fication 71 Fenchurch St London EC3M 4BS
Cert fikat o tipskem pregledu ES	COV0413459/TEC
Pooblaščeni zastopnik	Derek Bankier D v s onal Quality Manager Parker Hannif n ltd domn ck hunter division

Izjava

Kot pooblaščeni zastopnik izjavljam, da so zgornji podatki glede dobave/pro zvodnje tega zdelka skladni s standardi n ostalimi sorodnimi dokumenti, ki sledijo določbam zgornjih direktiv.

Podpis **Datum** 8/8 2007

Štev lka izjave 0002/8807

Declaraţie de conformitate RO

Parker Hannifin ltd domnick hunter div sion
Dukesway TVTE Gateshead Tyne & Wear NE11 0PZ UK

OIL X Evolution
AO AA ACS AR AAR 005 010 015 020 025 030
AO AA ACS AR AAR 035 040 045
AO AA ACS AR AAR 050 055

Directive	97/23/EC
Standarde u ilizate	Splošno skladno z ASMEV II D v 1 2004
Traseu de evaluare PED	Članek 3.3 (AO, AA, ACS, AAR - 005, 010, 015, 020, 025 030) Modul A (AO AA ACS AAR 035 040 045) Modul B (AO AA ACS AR AAR 050 055)
Organism no ificat pentru PED	Lloyds Reg ster Verificat on 71 Fenchurch St London EC3M 4BS
Certificat de examinare de tip CE	COV0413459 TEC
Reprezentant autorizat	Derek Bankier D v s onal Quality Manager Parker Hannif n td domnick hunter division

Declaraţie

În calitate de reprezentant autorizat, declar că informaţiile de mai sus, referitoare la furnizarea / fabricaţia acestui produs, sunt în conformitate cu standardele şi alte documente corelate care respectă prevederile Directivelor de mai sus.

Semnătura: **Data:** 8 8/2007

Număr declaraţie: 0002/8807