Operator Manual

Portable Rotary Screw Compressor

MOBILAIR M171 SIGMA CONTROL MOBIL pV

No.: 901810 05 USE

PRELIMINARY
Subject to Revision

⚠ WARNING

Breathing diesel engine exhaust exposes you to chemicals known to the State of California to cause cancer and birth defects or other reproductive harm.

> Always start and operate the engine in a well-ventilated area.

> If in an enclosed area, vent the exhaust to the outside.

> Do not modify or tamper with the exhaust system.

> Do not idle the engine except as necessary.

For more information go to www.P65warnings.ca.gov/diesel.

Manufacturer:

KAESER KOMPRESSOREN SE

96410 Coburg • PO Box 2143 • GERMANY • Tel. +49-(0)9561-6400 • Fax +49-(0)9561-640130

www.kaeser.com

PRELIMINARY
Subject to Revision

Original instructions
/KKW/M171B 2.12 en Z1 SBA-MOBILAIR

20210301 085819

Contents

1 Regarding this Document
1.1 Using this document ... 1
1.2 Further documents ... 1
1.3 Copyright ... 1
1.4 Symbols and labels ... 1
1.4.1 Warnings ... 1
1.4.2 Potential damage warnings ... 2
1.4.3 Other alert notes and their symbols ... 3

2 Technical Data
2.1 Nameplate ... 4
2.2 Options – options label ... 4
2.2.1 Air treatment ... 5
2.2.2 Compressed air distributor ... 5
2.2.3 Check valve function ... 5
2.2.4 Low temperature equipment ... 6
2.2.5 Equipment for fire hazard areas ... 6
2.2.6 Automatic engine start/stop ... 6
2.2.7 GSM/GPS unit ... 6
2.2.8 Lighting ... 6
2.2.9 Sealed floor pan ... 7
2.2.10 Pedestrian protection ... 7
2.3 Machine (without options) ... 7
2.3.1 Sound pressure level ... 7
2.3.2 Tightening torques for screws ... 7
2.3.3 Tightening torques for oil separator tank cover fixing screws ... 7
2.3.4 Tightening torques for lifting eye ... 7
2.3.5 Ambient conditions ... 8
2.3.6 Additional specifications ... 8
2.4 Chassis ... 8
2.4.1 Chassis options ... 8
2.5 Machines with stationary frame design ... 8
2.5.1 Weight of machines with stationary frame design ... 8
2.6 Compressor ... 9
2.6.1 Pressure variants ... 9
2.6.2 Compressed air outlet ... 11
2.6.3 Safety relief valve ... 11
2.6.4 Temperature ... 11
2.6.5 Cooling oil recommendation ... 12
2.6.6 Cooling oil charge ... 13
2.7 Engine ... 13
2.7.1 Engine specification ... 13
2.7.2 Carbon dioxide emission value ... 14
2.7.3 Oil recommendation ... 14
2.7.4 Fuel recommendation ... 15
2.7.5 Engine coolant recommendation ... 15
2.7.6 Reduction agent ... 17
2.7.7 Fluid volumes ... 17
2.7.8 Batteries ... 17
2.8 Options ... 18
2.8.1 Air treatment options ... 18
2.8.2 Low temperature equipment ... 19
2.8.3 Auxiliary electrical systems ... 19
2.8.4 GSM/GPS unit ... 20

PRELIMINARY
Subject to Revision

3 Safety and Responsibility
3.1 Basic instructions ... 21
3.2 Specified use ... 21
3.3 Incorrect Use ... 21
3.4 User's Responsibilities ... 21
3.4.1 Observe statutory and universally accepted regulations ... 21
3.4.2 Determining personnel ... 22
3.4.3 Complying with inspection schedules and accident prevention regulations ... 22
3.4.4 Taking the machine for general inspection ... 23
3.4.5 Documenting the mileage of the machine as trailer ... 24
3.5 Dangers ... 24
3.5.1 Safely dealing with sources of danger ... 24
3.5.2 Save handling of the DEF reduction agent ... 27
3.5.3 Safe machine operation ... 27
3.5.4 Organizational Measures ... 31
3.5.5 Danger areas ... 31
3.6 Safety devices ... 32
3.7 Safety signs ... 32
3.8 Noise control requirements ... 37
3.9 Emergencies ... 37
3.9.1 Correct actions in the event of a fire ... 37
3.9.2 Treating injuries from handling operating fluids/materials ... 38
3.10 Warranty ... 38
3.10.1 Noise emissions warranty ... 39
3.11 Identifying the effects of improper modifications ... 39
3.12 Environmental protection ... 40

4 Design and Function
4.1 Bodywork ... 41
4.2 Machine layout ... 42
4.3 Machine function ... 44
4.4 Operating modes and control mode ... 46
4.4.1 Machine operating modes ... 46
4.4.2 MODULATING control ... 46
4.5 Safety devices ... 47
4.5.1 Monitoring functions with shut-down ... 47
4.5.2 Further safety devices ... 47
4.6 SIGMA CONTROL MOBIL control panel ... 48
4.7 Variable pressure speed control ... 49
4.8 Exhaust gas after-treatment ... 50
4.8.1 Engine optimization ... 50
4.8.2 Reduction of particle emissions ... 51
4.8.3 Diesel particulate filter regeneration ... 52
4.8.4 Reduction of nitrogen oxide emissions ... 53
4.9 Options ... 55
4.9.1 Air treatment options ... 55
4.9.2 Auxiliary electrical systems ... 58
4.9.3 Low temperature equipment options ... 58
4.9.4 Options for operating in fire hazard areas ... 59
4.9.5 Start/stop/automatic options ... 59
4.9.6 GSM/GPS unit ... 60
4.9.7 Transport options ... 60
4.9.8 Frame design options for stationary machines ... 61
4.9.9 Closed floor pan option ... 61
4.9.10 Pedestrian protection option ... 62

PRELIMINARY
Subject to Revision

Contents

5 Installation and Operating Conditions
5.1 Ensuring safety ... 63
5.2 Installation conditions ... 63
5.3 Machine with stationary frame structure ... 64

6 Installation
6.1 Ensuring safety ... 65
6.2 Reporting Transport Damage ... 65
6.3 Perform regular maintenance on the chassis ... 65
6.4 Installing a machine with stationary frame superstructure on a truck platform ... 65
6.5 Connect automatic start/stop externally ... 66

7 Initial Start-up
7.1 Ensuring safety ... 67
7.2 Before initial start-up (or recommissioning) ... 67
7.2.1 Instructions to be observed before commissioning or recommissioning ... 67
7.2.2 Special measures for recommissioning after storage ... 68
7.3 Checking installation and operating conditions ... 68
7.4 Low-temperature operation (winter) ... 69
7.4.1 Jump starting the machine ... 69
7.4.2 Starting up low-temperature equipment ... 71
7.5 Commissioning electrical equipment ... 72

8 Operation
8.1 Ensuring safety ... 73
8.2 Starting and stopping ... 74
8.2.1 Follow the brief instructions ... 74
8.2.2 Commissioning the machine ... 75
8.2.3 Starting the machine ... 76
8.2.4 Regulating the shut-off valve ... 77
8.2.5 Setting the compressed air discharge pressure ... 77
8.2.6 Switching the machine to the run-on phase ... 79
8.2.7 Shutting down the machine ... 80
8.2.8 Shutting down in an emergency ... 81
8.3 Acknowledging alarm, warning and maintenance messages ... 81
8.3.1 Confirming alarm messages ... 81
8.3.2 Acknowledging warning and maintenance messages ... 82
8.4 Operating the options ... 82
8.4.1 Operating the machine with the “Automatic start/stop" option ... 82
8.4.2 Running the coolant pre-heating ... 84
8.4.3 Bypassing and activating the heat exchanger ... 84
8.4.4 Empty condensate collector after operation ... 88
8.5 Cleaning the machine after operation ... 89

9 Fault Recognition and Rectification
9.1 Basic instructions ... 90
9.2 SIGMA CONTROL MOBIL messages ... 90
9.2.1 Alarm messages on the controller (machine off) ... 90
9.2.2 Warning messages on the controller ... 95
9.3 Evaluating engine faults and alarms ... 97
9.3.1 Engine refuses to start or does not turn over ... 97
9.3.2 Engine does not reach full speed ... 98
9.4 Analysing compressor faults and alarms ... 99
9.4.1 Working pressure too high ... 99
9.4.2 Working pressure too low ... 99
9.4.3 Safety valve blows off ... 100

PRELIMINARY
Subject to Revision

9.4.4 Machine overheating ... 100
9.4.5 Too much oil residue in the compressed air ... 101
9.4.6 Oil flows from the compressor air filter after shutdown ... 101
9.4.7 High moisture content in the compressed air ... 101

10 Maintenance
10.1 Ensuring safety ... 102
10.2 Note the maintenance messages on the controller ... 103
10.2.1 Evaluating the maintenance message ... 103
10.2.2 Concluding the maintenance ... 104
10.3 Maintenance schedules ... 104
10.3.1 Logging maintenance work ... 104
10.3.2 Maintenance tasks after commissioning ... 104
10.3.3 Regular maintenance tasks ... 105
10.4 Engine maintenance ... 110
10.4.1 Maintaining the coolant cooler ... 111
10.4.2 Engine air filter maintenance ... 117
10.4.3 Fuel system maintenance ... 119
10.4.4 Checking the engine oil level ... 124
10.4.5 Engine oil filling and topping off ... 125
10.4.6 Changing the engine oil ... 126
10.4.7 Replacing the engine oil filter ... 129
10.4.8 Drive belt maintenance ... 130
10.4.9 Battery maintenance ... 134
10.4.10 Checking the fastening of the fuel tank ... 137
10.4.11 Replace the filter insert for the reduction agent pump ... 138
10.5 Compressor Maintenance ... 140
10.5.1 Checking cooling oil level ... 140
10.5.2 Cooling oil filling and topping off ... 141
10.5.3 Changing the cooling oil ... 142
10.5.4 Replacing the compressor oil filter ... 146
10.5.5 Oil separator tank dirt trap maintenance ... 147
10.5.6 Changing the oil separator cartridge ... 149
10.5.7 Compressor air filter maintenance ... 151
10.6 Cleaning the cooler ... 154
10.6.1 Cleaning the compressor cooler and engine radiator ... 155
10.6.2 Cleaning the compressed air after-cooler ... 156
10.7 Check/replace hose lines ... 157
10.7.1 Replace the fuel lines of the drive engine ... 157
10.7.2 Replace the pressure hoses of the engine ... 157
10.7.3 Replace the pressure hoses of the compressor ... 157
10.8 Check sound proofing material ... 157
10.9 Maintenance of rubber sealing strips ... 158
10.10 Check safety functions ... 158
10.10.1 Check the EMERGENCY STOP device ... 158
10.10.2 Have the activating pressure of the relief valve checked ... 159
10.10.3 Having excessive temperature shut-down function checked ... 159
10.11 Maintenance for Optional Items ... 160
10.11.1 Centrifugal separator maintenance ... 160
10.11.2 Combination filter maintenance ... 162
10.11.3 Fresh air filter maintenance ... 166
10.11.4 Engine air shut-off valve maintenance ... 169
10.11.5 Draining liquid accumulation within the machine ... 171
10.11.6 Fit the flexible pipe connection ... 171
10.12 Documenting maintenance and service work ... 173

PRELIMINARY
Subject to Revision

Contents

11 Spares, Operating Materials, Service

11.1 Note the nameplate 174
11.2 Ordering consumable parts and operating fluids/materials 174
11.3 KAESER AIR SERVICE 175
11.4 Replacement parts for service and repair 175

12 Decommissioning, Storage and Transport

12.1 De-commissioning 245
12.1.1 Temporary de-commissioning 245
12.1.2 Long-term decommissioning and storage 246
12.2 Transport 247
12.2.1 Safety 247
12.2.2 Transporting the machine as trailer 247
12.2.3 Transport with a crane 247
12.2.4 Transport with a forklift truck 248
12.2.5 Transporting the machine as load 249
12.3 Storage 250
12.4 Disposal 251

13 Annex

13.1 Marking 252
13.2 Pipeline and instrument flow diagram (P+I diagram) 252
13.3 Dimensional drawings 258
13.3.1 Dimensional drawing – chassis 258
13.3.2 Dimensional drawing, chassis options 260
13.3.3 Dimensional drawing, chassis options 262
13.3.4 Dimensional drawing, chassis options 264
13.3.5 Dimensional drawing, stationary version 266
13.3.6 Dimensional drawing, stationary version 268
13.4 Wiring diagrams 270
13.4.1 Electrical Diagram 270
13.4.2 Lighting and signaling system connection 312
13.4.3 Lighting and signaling system connection 320
13.5 Fuel circulation diagram 325
13.6 Pipeline and instrument flow diagram (exhaust treatment) 328
13.7 Operating instructions for compressed air filter (combination filter) 330
13.8 Operating instructions for compressed air filter (fresh air filter) 358
13.9 Oil-injected MOBILAIR service intervals 372

PRELIMINARY
Subject to Revision

PRELIMINARY
Subject to Revision

List of Illustrations

Fig. 1 Engine speed/flow rate depending on the nominal system pressure ... 10
Fig. 2 Engine speed depending on the nominal system pressure ... 11
Fig. 3 Location of safety signs (outside) ... 32
Fig. 4 Location of safety signs (inside) ... 36
Fig. 5 Overview of bodywork ... 41
Fig. 6 Right-hand door opened ... 42
Fig. 7 Left-hand door opened ... 42
Fig. 8 Machine from above, roof removed ... 43
Fig. 9 View from beneath ... 44
Fig. 10 Machine overview ... 45
Fig. 11 Continuous regulation of FAD (standstill) ... 47
Fig. 12 SIGMA CONTROL MOBIL main display – overview ... 48
Fig. 13 Exhaust gas treatment – Reduction of particle emissions ... 51
Fig. 14 Exhaust gas treatment – Reduction of nitrogen oxide emissions ... 54
Fig. 15 Compressed air options ... 56
Fig. 16 Automatic start/stop, external connections ... 60
Fig. 17 Position of service openings with stationary frame structure ... 62
Fig. 18 Drain points for oil and coolant from engine and compressor ... 62
Fig. 19 Minimum distance from excavations/slopes and walls ... 63
Fig. 20 Connect automatic start/stop externally ... 66
Fig. 21 Jumper cable connection diagram ... 70
Fig. 22 Connect auxiliary electrical systems ... 72
Fig. 23 Starting instruments ... 74
Fig. 24 Brief instructions on starting procedure ... 75
Fig. 25 Brief instructions on stopping procedure ... 75
Fig. 26 Control line shut-off valve ... 77
Fig. 27 Select menu option "set pressure in the oil separator tank" ... 78
Fig. 28 Setting the output pressure ... 79
Fig. 29 Preparing readiness to start of the "Automatic start/stop" ... 83
Fig. 30 Waiting for start command ... 83
Fig. 31 Heat exchanger with bypass valve (shut-off valve) ... 85
Fig. 32 Heat exchanger with bypass valve (shut-off valve) ... 87
Fig. 33 Empty the condensate collector ... 88
Fig. 34 Checking coolant level ... 112
Fig. 35 Draining the coolant from the engine coolant cooler ... 115
Fig. 36 Draining the coolant from the engine coolant cooler (closed floor pan/stationary machine) ... 116
Fig. 37 Warning messages: Air filter engine intake maintenance ... 117
Fig. 38 Engine air filter maintenance ... 118
Fig. 39 Clean the filter element (air filter) ... 118
Fig. 40 Service fuel system ... 120
Fig. 41 Bleeding the fuel system ... 121
Fig. 42 Warning message: Fuel filter water level ... 122
Fig. 43 Emptying the fuel pre-filter and water separator ... 122
Fig. 44 Change the fuel prefilter cartridge ... 123
Fig. 45 Fuel filter maintenance ... 124
Fig. 46 Checking the engine oil level ... 125
Fig. 47 Draining the engine oil ... 127
Fig. 48 Draining the engine oil (closed floor pan - stationary machine) ... 128
Fig. 49 Change the oil filter ... 129
Fig. 50 Belt guard attachment ... 131
Fig. 51 Manually checking the belt tension ... 132
Fig. 52 Changing/tensioning the drive belt ... 133
Fig. 53 Safety signs - warning labels on the battery ... 134
Fig. 54 Reduction agent pump ... 139

PRELIMINARY
Subject to Revision

Fig. 55 Changing the filter insert for the reduction agent pump 139
Fig. 56 Checking cooling oil level 141
Fig. 57 Draining the compressor cooling oil 143
Fig. 58 Draining the cooling oil (closed floor pan - stationary machine) 145
Fig. 59 Change the oil filter 146
Fig. 60 Oil separator tank dirt trap maintenance 148
Fig. 61 Changing the oil separator cartridge 150
Fig. 62 Warning messages: Compressor air filter maintenance 152
Fig. 63 Compressor air filter maintenance 153
Fig. 64 Clean the filter element (air filter) 153
Fig. 65 Cleaning the compressor cooler and engine radiator 155
Fig. 66 Cleaning the compressed air after-cooler 156
Fig. 67 Cleaning the dirt trap 161
Fig. 68 Filter combination 163
Fig. 69 Combination filter maintenance 164
Fig. 70 Fresh air filter maintenance 167
Fig. 71 Engine air shut-off valve maintenance 170
Fig. 72 Fit the flexible pipe connection 172
Fig. 73 Transporting using a forklift truck 249
Fig. 74 Guys to secure the freight 250
Fig. 75 Marking 252

PRELIMINARY
Subject to Revision

List of Tables

Tab. 1 Danger levels and their definition (personal injury) ... 1
Tab. 2 Danger levels and their definition (damage to property) ... 2
Tab. 3 Nameplate ... 4
Tab. 4 Extract from the options label ... 5
Tab. 5 Air treatment options ... 5
Tab. 6 Compressed air distributor option ... 5
Tab. 7 Check valve option ... 5
Tab. 8 Low temperature equipment options ... 6
Tab. 9 Optional equipment for fire hazard areas ... 6
Tab. 10 Automatic engine start/stop ... 6
Tab. 11 GSM/GPS unit ... 6
Tab. 12 Lighting options ... 6
Tab. 13 Sealed floor pan option ... 7
Tab. 14 Pedestrian protection option ... 7
Tab. 15 Sound pressure level ... 7
Tab. 16 Tightening torques for screws (property class 8.8, coefficient of friction μ = 0.12) ... 7
Tab. 17 Tightening torques for oil separator tank cover fixing screws ... 7
Tab. 18 Torques for lifting eye screws ... 8
Tab. 19 Ambient conditions ... 8
Tab. 20 Weight of the machine ... 9
Tab. 21 Max. working pressure and flow rate ... 9
Tab. 22 Safety valve actuating pressure ... 9
Tab. 23 Maximum working pressure ... 9
Tab. 24 Flow rate depending on the nominal system pressure ... 9
Tab. 25 Engine speed depending on the nominal system pressure ... 10
Tab. 26 Compressed air distributor ... 11
Tab. 27 Safety relief valve actuating pressure ... 11
Tab. 28 Required temperatures readiness to switch to LOAD mode ... 11
Tab. 29 Airend discharge temperature ... 11
Tab. 30 Cooling oil recommendation ... 12
Tab. 31 Cooling oil recommendation (food processing) ... 12
Tab. 32 Cooling oil charge ... 13
Tab. 33 Engine specification ... 13
Tab. 34 CO_2 emission value ... 14
Tab. 35 Engine oil recommendation ... 14
Tab. 36 Initial engine oil quantity ... 15
Tab. 37 Water quality parameters for cooling water ... 16
Tab. 38 Initial filling of engine water cooler ... 16
Tab. 39 Reduction agent ... 17
Tab. 40 Fluid volumes ... 17
Tab. 41 Batteries ... 17
Tab. 42 Fresh air filter conditions ... 18
Tab. 43 Interrelation between compressed air treatment and compressed air quality ... 18
Tab. 44 Ambient conditions, low temperature equipment ... 19
Tab. 45 Batteries, low-temperature equipment ... 19
Tab. 46 Power supply connection details ... 19
Tab. 47 Technical data – Coolant pre-heating device ... 20
Tab. 48 Battery charger specification ... 20
Tab. 49 GSM/GPS unit ... 20
Tab. 50 Inspection intervals according to Ordinance on Industrial Health and Safety ... 23
Tab. 51 General inspection intervals ... 23
Tab. 52 Danger areas ... 31
Tab. 53 Safety signs ... 33
Tab. 54 Safety signs ... 36

PRELIMINARY
Subject to Revision

List of Tables

Tab. 55 Instrument panel keys and displays ... 48
Tab. 56 Compressed air quality with/without heat exchanger ... 57
Tab. 57 Stationary machines ... 61
Tab. 58 Measures for recommissioning the compressor after a long period of storage ... 68
Tab. 59 Installation conditions checklist ... 68
Tab. 60 Shut-off valve position and selected compressed air quality ... 85
Tab. 61 Shut-off valve position and selected compressed air quality ... 86
Tab. 62 Alarm messages and actions concerning the engine. ... 90
Tab. 63 Alarm messages and actions concerning the compressor unit ... 93
Tab. 64 Fault messages and actions concerning the controller ... 93
Tab. 65 Alarm messages and troubleshooting in "General faults" ... 94
Tab. 66 Warning messages and measures relating to the engine ... 95
Tab. 67 Warning messages and measures relating to the compressor ... 97
Tab. 68 Fault: engine refuses to start or comes to a stop. ... 97
Tab. 69 Alarm: "engine does not reach full speed". ... 98
Tab. 70 Fault: working pressure too high ... 99
Tab. 71 Fault: working pressure too low ... 99
Tab. 72 Fault: safety valve blowing off ... 100
Tab. 73 Fault: machine overheating ... 100
Tab. 74 Alarm: "Too much oil residue in the compressed air" ... 101
Tab. 75 Alarm: "Oil flows from the compressor air filter after shutdown" ... 101
Tab. 76 Fault: high moisture content in the compressed air ... 101
Tab. 77 Advise others that the machine is being serviced. ... 102
Tab. 78 Maintenance messages and required actions ... 103
Tab. 79 Maintenance tasks on the machine after commissioning ... 105
Tab. 80 Maintenance intervals and regular maintenance tasks ... 105
Tab. 81 Regular machine maintenance tasks ... 106
Tab. 82 Regular maintenance task options ... 109
Tab. 83 Coolant mixture table ... 113
Tab. 84 Starter batteries charge level ... 135
Tab. 85 Relief valve activating pressure ... 159
Tab. 86 Safety shut-down at excessive airend discharge temperature ... 160
Tab. 87 Dimensions of the flexible pipe connection ... 172
Tab. 88 Maintenance log ... 173
Tab. 89 Compressor consumables ... 174
Tab. 90 Consumable engine parts ... 174
Tab. 91 Replacement parts, combination filter ... 175
Tab. 92 Replacement parts, fresh air filter ... 175
Tab. 93 "Temporarily decommissioned" information notice ... 245
Tab. 94 Long-term decommissioning and storage checklist ... 246
Tab. 95 Text for the long-term decommissioned and storage information notice ... 247
Tab. 96 Service maintenance package - (1x service per year) ... 372
Tab. 97 Service intervals for MOBILAIR parts, Filter SET group (compressor and engine) ... 373
Tab. 98 Service intervals for MOBILAIR parts, compressor group ... 374
Tab. 99 Service intervals for MOBILAIR parts, Filter SET group Engine ... 376
Tab. 100 Service intervals for MOBILAIR parts, Engine group ... 377

PRELIMINARY Subject to Revision

1 Regarding this Document

1.1 Using this document

The operating manual is a component of the product. It describes the machine as it was at the time of first delivery after manufacture.

- ➤ Keep the operating manual in a safe place throughout the life of the machine.
- ➤ Supply any successive owner or user with this operating manual.
- ➤ Please insert any amendment or revision of the operating manual sent to you.
- ➤ Enter details from the machine nameplate and individual items of equipment in the table in chapter 2.

1.2 Further documents

Further documents included with this operating manual are:

- Certificate of acceptance / operating instructions for the pressure vessel
- Declaration of Conformity in accordance with the applicable directive
- Chassis operating instructions (where applicable).
- SIGMA CONTROL MOBIL service manual

Missing documents can be requested from KAESER.

- ➤ Make sure all documents are complete and observe the instructions contained in them.
- ➤ Make sure you provide the data from the nameplate when ordering documents.

1.3 Copyright

This operator manual is copyright protected. Queries regarding use or duplication of the documentation should be referred to KAESER. Correct use of information will be fully supported.

1.4 Symbols and labels

- ➤ Please note the symbols and labels used in this document.

1.4.1 Warnings

Warning notices indicate risks potentially resulting in personal injury, if the measures specified are not taken.

Warning notices indicate three levels of danger identified by the corresponding signal word:

Signal word	Meaning	Consequences of ignoring the warning
DANGER	Warns of an imminent danger	Will very likely result in death or severe injury
WARNING	Warns of a potentially imminent danger	May result in death or severe injury

PRELIMINARY
Subject to Revision

Signal word	Meaning	Consequences of ignoring the warning
CAUTION	Warns of a potentially dangerous situation	May result in a moderate physical injury

Tab. 1 Danger levels and their definition (personal injury)

Some warning notes may precede a chapter. They apply to the entire chapter including all subsections.

Example:

⚠ DANGER

The type and source of the imminent danger is shown here!
The possible consequences of ignoring a warning are shown here.
The word "DANGER" indicates that death or severe injury can very likely result from ignoring the warning.

➤ *The measures required to protect yourself from danger are shown here.*

Warning notes referring to a subsection or the subsequent action are integrated into the procedure and numbered as an action.

Example:

1. **⚠ WARNING** *The type and source of the imminent danger is shown here!*
   The possible consequences of ignoring a warning are shown here.
   The word "WARNING" indicates that death or severe injury may result from ignoring the warning.
   ➤ *The measures required to protect yourself from danger are shown here.*
2. Always read and comply with warning instructions.

1.4.2 Potential damage warnings

Contrary to the warnings shown above, damage warnings do not indicate a potential personal injury.

Damage warnings have only one danger level, identified with this signal word:

Signal word	Meaning	Consequences of non-compliance
NOTE	Warns of a potentially dangerous situation	Damage to property is possible

Tab. 2 Danger levels and their definition (damage to property)

Example:

NOTICE

The type and source of the imminent danger is shown here!
Potential effects when ignoring the warning are indicated here.

➤ *The protective measures against the damages are shown here.*

➤ Carefully read and fully comply with warnings against damages.

PRELIMINARY Subject to Revision

1.4.3 Other alert notes and their symbols

This symbol indicates particular important information.

Material — Here you will find details on special tools, operating materials or spare parts.

Precondition — Here you will find conditional requirements necessary to carry out the task.
The conditions relevant to safety shown here will help you to avoid dangerous situations.

➤ This symbol is placed by lists of actions comprising one step of a task.

1. In process instructions with several steps ...
2. ... the sequence of steps is numbered.

Result — Shows the expected conclusion of the previous action.

Option da — ➤ Information relating to one option only is marked with an option code (e.g., "option da" means that this section is only valid for machines with the air treatment components "aftercooler and centrifugal separator"). Option codes used in this operating manual are explained in chapter 2.2.

Information referring to potential problems is identified by a question mark.
The cause is named in the help text ...
➤ ... and a remedy given.

This symbol refers to important information or measures concerning environmental protection.

Further information — Further topics are introduced here.

PRELIMINARY
Subject to Revision

2 Technical Data

2.1 Nameplate

The machine's nameplate provides the model designation and important technical information.
The nameplate is located on the outside of the machine (see illustration in chapter 13.1).

➤ Enter the nameplate data here as a reference:

Feature	Value
Vehicle Identification No.	
Permissible total weight	
Permissible coupling load	
Permissible axle load	
Portable compressor	
Part no.	
Serial no.	
Year of manufacture	
Total weight	
Lifting point load capacity	
Rated engine power	
Engine speed	
Maximum working pressure	

Tab. 3 Nameplate

2.2 Options – options label

A list of the options fitted to your machine helps to correlate the information in this service manual. Options fitted to the machine are listed on the options label (code letters).

The nameplate is to be found:

- on the outside of the machine,
- on the front (see chapter 13.1)

The following table lists all possible options.
Only the codes for those options fitted appear on the nameplate.

PRELIMINARY
Subject to Revision

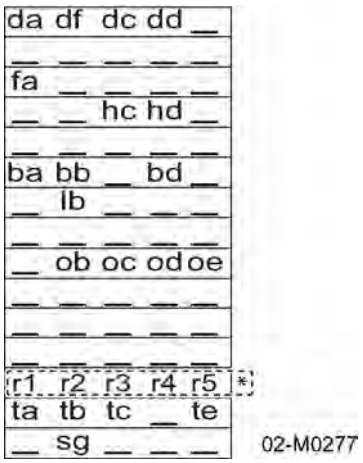

* r1 - r5 = place holders for chassis options:

- r1 = rb; rc; rd
- r2 = rk; rl
- r3 = rm; ro
- r4 = rr; rs; rt
- r5 = rw; rx

Tab. 4 Extract from the options label

➤ Take a list of fitted options from the options label and enter the fitted options as reference.

2.2.1 Option da, df, dc, dd Air treatment

Option	Option code	Provided?
Aftercooler and centrifugal separator	da	
Heat exchanger (with bypass)	df	
Fresh air filter	dc	
Filter combination	dd	

Tab. 5 Air treatment options

2.2.2 Option fa Compressed air distributor

Option	Option code	Available?
Non-separated compressed air distribution line	fa	

Tab. 6 Compressed air distributor option

2.2.3 Option hc, hd Check valve function

Option	Option code	Available?
Pressure/check valve (without option dd)	hc	
Pressure/check valve (with option dd)	hd	

Tab. 7 Check valve option

PRELIMINARY Subject to Revision

2.2.4 Option ba
Low temperature equipment

Option	Option code	Available?
Low temperature equipment	ba	
Engine coolant pre-heating	bb	
Stronger battery	bd	

Tab. 8 Low temperature equipment options

2.2.5 Option lb
Equipment for fire hazard areas

Option	Option Code	Provided?
Engine air intake shut-off valve (automatic/manual shut-off)	lb	

Tab. 9 Optional equipment for fire hazard areas

2.2.6 Option ob, od
Automatic engine start/stop

Option	Option code	Available?
Automatic engine start/stop	ob	
Trickle charging for starter batteries	od	

Tab. 10 Automatic engine start/stop

2.2.7 Option oc
GSM/GPS unit

Option	Option code	Available?
GSM/GPS unit	oc	

Tab. 11 GSM/GPS unit

2.2.8 Option ta, tb, tc, te
Lighting

Option	Option code	Available?
None (stationary)	ta	
Reflective warning triangle	tb	
EG - 12 V	tc	
USA - 12 V (DOT conformity)	te	

Tab. 12 Lighting options

PRELIMINARY
Subject to Revision

2.2.9 Option oe Sealed floor pan

Option	Option code	Available?
Sealed floor pan	oe	

Tab. 13 Sealed floor pan option

2.2.10 Option sg Pedestrian protection

Option	Option code	Available?
Pedestrian protection	sg	

Tab. 14 Pedestrian protection option

2.3 Machine (without options)

2.3.1 Sound pressure level

Sound pressure levels comply with the American EPA Standard.
Measurement distance: 23 ft

	M171
Guaranteed sound pressure level(1) [dB(A)]	76
(1) Applies exclusively to machines lined with sound proofing material.	

Tab. 15 Sound pressure level

2.3.2 Tightening torques for screws

Recommended values for screws of property class 8.8

Thread	M4	M5	M6	M8	M10	M12	M14	M16	M18	M20
Torque [lbf-in]	26.6	52.2	88.5	216.8	424.8	743.5	1177	1823	2611	3673

Tab. 16 Tightening torques for screws (property class 8.8, coefficient of friction μ = 0.12)

2.3.3 Tightening torques for oil separator tank cover fixing screws

Recommended values for screws by strength class:

Screws	Strength class	Thread	Torque [lbf-in]
Hex-head bolt	8.8	M20	1770

Tab. 17 Tightening torques for oil separator tank cover fixing screws

2.3.4 Tightening torques for lifting eye

Recommended values for screws by strength class:

PRELIMINARY Subject to Revision

Screws	Strength class	Thread	Torque [lbf in]
Hex-head bolt	8.8	M12	266
Hex-head bolt	8.8	M16	1770

Tab. 18 Torques for lifting eye screws

2.3.5 Ambient conditions

Positioning	Limit value
Maximum altitude amsl* [ft]	3000
Minimum ambient temperature [°F]	14
Maximum ambient temperature [°F]	113
* Higher altitudes are permissible only after consultation with the manufacturer.	

Tab. 19 Ambient conditions

2.3.6 Additional specifications

For specifications, according to the machine's operating license, such as:

- dimensions,
- track width,
- footprint,

can be found in the dimensioned drawings in Chapter 13.3.

The dimensional drawings also show the position of the following inlets and outlets:

- Cooling air inlet
- Cooling air outlet
- Compressed air outlet
- Exhaust

2.4 Chassis

2.4.1 Chassis options

➢ See the technical data relating to the chassis in the separate document "Chassis Operating Manual".

2.5 Machines with stationary frame design

2.5.1 Option rw, rx
Weight of machines with stationary frame design

Actual weight of individual machines is dependent on equipment fitted (see machine nameplate).

PRELIMINARY
Subject to Revision

➤ Enter the actual overall weight* from the nameplate into the table below for reference.

Option	rw	rx
Type of stationary frame design	Skids	Frame
Actual total weight [lb]*		
*Enter here for reference, the actual total weight taken from the nameplate of the machine.		

Tab. 20 Weight of the machine

2.6 Compressor

2.6.1 Pressure variants

2.6.1.1 Max. working pressure and flow rate

Maximum machine working pressure:

Maximum working pressure [psi]	125
SIGMA airend	293 G
Setting range, nominal system pressure [psig]	72.5 - 132
Flow rate [cfm]	600
Flow rate as per ISO 1217:2009. Annex D	

Tab. 21 Max. working pressure and flow rate

Safety valve:

Maximum working pressure [psi]	Actuating pressure [psi]
125	160

Tab. 22 Safety valve actuating pressure

2.6.1.2 Variable pressure flow rate control (pV control)

Maximum machine working pressure:

Maximum working pressure [psi]	203
SIGMA airend	293 G
Setting range, nominal system pressure [psig]	72.5 - 210

Tab. 23 Maximum working pressure

Flow rate and nominal system pressure:

Measuring point	Maximum working pressure (Nominal pressure) [psi]	Flow rate [cfm]	Application example
a1	87	547	Hammer application
a2	145		Blasting application
a3	174	477	Cable injection

PRELIMINARY Subject to Revision

Measuring point	Maximum working pressure (Nominal pressure) [psi]	Flow rate [cfm]	Application example
a4	203	406	Drilling application

Tab. 24 Flow rate depending on the nominal system pressure

Use compressed air tools only with the pressure appropriate for its intended use (tool working pressure)!

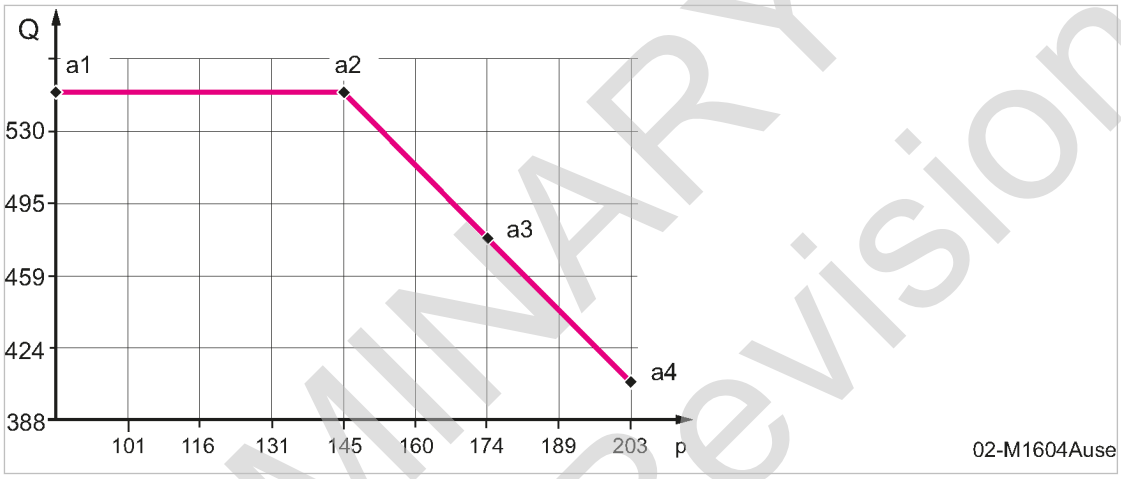

Fig. 1 Engine speed/flow rate depending on the nominal system pressure

Q Flow rate [cfm]
p Nominal pressure [psig]

Flow rate in accordance with ISO 1217:2009. Annex D

Engine speed depending on the nominal system pressure:

Measuring point	Pressure stage (nominal pressure) [psi]	Speed rpm
a1	87–145	1800
a2	145	1800
a3	174	1600
a4	203	1450

Tab. 25 Engine speed depending on the nominal system pressure

Example, by way of illustration:
Maximum nominal system pressure at SIGMA CONTROL MOBIL controller set to:→ 94.3 psi (in graphic marked as B)

PRELIMINARY Subject to Revision

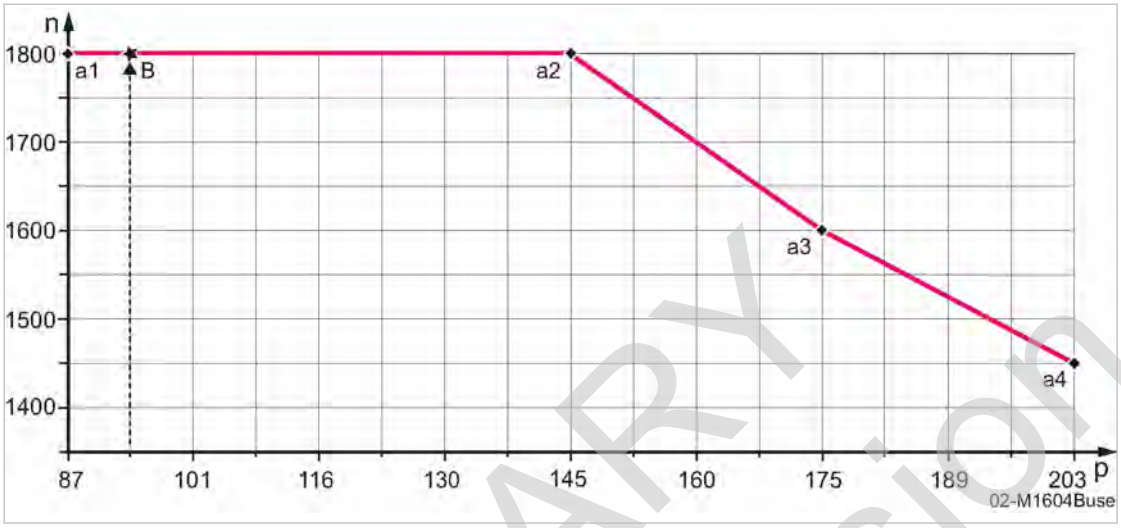

Fig. 2 Engine speed depending on the nominal system pressure

- (n) Engine speed [rpm]
- (p) Nominal pressure [psig]
- (B) Example

2.6.2 Compressed air outlet

Outlet valve ["]	Number
G 3/4	3
G 2	1

Tab. 26 Compressed air distributor

2.6.3 Safety relief valve

Maximum working pressure [psi]	Activating pressure [psi]
203	230

Tab. 27 Safety relief valve actuating pressure

2.6.4 Temperature

Required temperatures readiness to switch to LOAD mode	Values
Airend discharge temperature (ADT) [°F]	86
The engine coolant temperature (ECT) [°F]	68

Tab. 28 Required temperatures readiness to switch to LOAD mode

Airend discharge temperature	Values
Typical airend discharge temperature during operation [°F]	167 212

PRELIMINARY
Subject to Revision

Airend discharge temperature	Values
Maximum airend discharge temperature (automatic safety shut-down) [°F]	243

Tab. 29 Airend discharge temperature

2.6.5 Cooling oil recommendation

A sticker showing the type of oil used is located near the oil separator tank filler.

Information on ordering cooling oil is found in chapter 11.

Cooling oils for general applications

	SIGMA FLUID		
	MOL	S-460	S-570
Description	Mineral oil	Synthetic oil	Synthetic oil
Application	Standard oil for all applications except in connection with processing of food products. Particularly suitable for machines with a low duty cycle.	Standard oil for all applications except in connection with processing of food products. Particularly suitable for machines with a high duty cycle. Not suitable for East and Southeast Asia.	Special oil for ambient conditions with high temperatures and humidity. Standard oil for all applications except in connection with foodstuffs. Particularly suitable for machines with a high duty cycle.
Viscosity at 104 °F	0.07 in^2/s (D 445; ASTM test)	0.07 in^2/s (D 445; ASTM test)	0.08 in^2/s (D 445; ASTM test)
Viscosity at 212 °F	0.01 in^2/s (D 445; ASTM test)	0.01 in^2/s (D 445; ASTM test)	0.01 in^2/s (D 445; ASTM test)
Flash point	446 °F (D 92; ASTM test)	484 °F (D 92; ASTM test)	496 °F (D 92; ASTM test)
Density at 59 °F	54.2 lb/ft^3 (D 4052; ASTM test)	53.7 lb/ft^3 (D 4052; ASTM test)	54.2 lb/ft^3 (D 4052; ASTM test)
Pour point:	–22 °F (D 97; ASTM test)	–16.6 °F (D 97; ASTM test)	–65 °F (D 97; ASTM test)

Tab. 30 Cooling oil recommendation

Cooling oils for applications in food processing

	SIGMA FLUID	
	FG-460	FG-680
Description	Synthetic oil	Synthetic oil
Application	Specifically for machines in applications where the compressed air may come into contact with foodstuff.	Special oil for ambient conditions with high temperatures and humidity. Specifically for machines in applications where the compressed air may come into contact with foodstuff.

PRELIMINARY
Subject to Revision

	SIGMA FLUID	
	FG-460	FG-680
Approval	USDA H1, NSF approved for the manufacture of food packaging, meat and poultry processing and other food processing applications.	USDA H1, NSF approved for the manufacture of food packaging, meat and poultry processing and other food processing applications.
Viscosity at 104 °F	0.07 in^2/s (D 445; ASTM test)	0.10 in^2/s (D 445; ASTM test)
Viscosity at 212 °F	0.01 in^2/s (D 445; ASTM test)	0.02 in^2/s (D 445; ASTM test)
Flash point	475 °F (D 92; ASTM test)	460 °F (D 92; ASTM test)
Density at 59 °F	54.5 lb/ft^3 (D 4052; ASTM test)	53.3 lb/ft^3 (D 4052; ASTM test)
Pour point:	–38.2 °F (D 97; ASTM test)	–38.2 °F (D 97; ASTM test)

Tab. 31 Cooling oil recommendation (food processing)

2.6.6 Cooling oil charge

Cooling oil	Fluid volume [gal]
Machine	13.2
Machine + heat exchanger (Option db)	14

Tab. 32 Cooling oil charge

2.7 Engine

2.7.1 Engine specification

Feature	Specification
Make/Model	Deutz / TCD 6.1 L06
Engine control	Electronic
Fuel injection	Common rail system
Rated engine power [hp]	173
Speed at LOAD operation [rpm]	1800
Speed at IDLE operation [rpm]	1300
Type of fuel	Diesel
Fuel consumption under LOAD operation [gal/h]	8.53
Engine oil consumption relative to fuel consumption [%]	approx. 0.5

PRELIMINARY Subject to Revision

Feature	Specification
Reducing agent consumption relative to fuel consumption [%]	approx. 3 – 7

Tab. 33 Engine specification

2.7.2 Carbon dioxide emission value

These CO_2 measurements result from testing a (parent) engine over a fixed test cycle under laboratory conditions. The engine is representative of the engine family and shall not imply or express any guarantee of the performance of an individual engine.

CO_2 measurement	Value
CO_2 emission [g/kWh]	703.0
correspons to [lb/hp·h]	1.1557

Tab. 34 CO_2 emission value

2.7.3 Oil recommendation

The engine oil must meet the following classification:

- DEUTZ DQC IV LA
- ACEA, class E9
- API, class CI-4

➢ Use only engine oil with low white ash accumulation.

- Engine oils that do not conform to the above can shorten the useful life of the engine!
- The use of unlisted engine oils requires prior authorization by KAESER.

➢ Please contact an authorized KAESER service representative.

Viscosity

For selecting the appropriate viscosity class, you must take the ambient temperature at the installation site or the machine deployment area into account. Excessively high viscosity can cause starting difficulties, while a viscosity that is too low reduces the lubricating capacity and may cause very high oil consumption.

Viscosity is classified by SAE.

Always use multi-grade lubricating oils!

Always ensure the prescribed lubricating oil quality when selecting the viscosity class!

Ambient temperatures [°F]	Viscosity class
–22 86	SAE 5W–30 SAE 5W–40 SAE 10W–30
–22 104	SAE 10W–40 SAE 5W–40 SAE 10W–30

PRELIMINARY Subject to Revision

Ambient temperatures [°F]	Viscosity class
−4 86	SAE 15W−30 SAE 5W−40 SAE 10W−30

Tab. 35 Engine oil recommendation

Initial engine oil quantity

The engine is filled initially with the following engine oil:

Ambient temperatures [°F]	Viscosity class
−22 104	SAE 10W−40

Tab. 36 Initial engine oil quantity

2.7.4 Fuel recommendation

To comply with emission regulations, diesel engines fitted with an exhaust gas treatment system must be operated only with a sulphur-free diesel fuel. Compliance with the emission requirements but also the durability of the individual exhaust gas treatment components is not assured if this requirement is ignored!

The diesel fuel must meet the requirements of EN 590 and ASTM D975 respectively.

The use of other fuels as well as the mixing with additives is only permitted after consultation with the engine manufacturer.

The following fuel specifications are approved:

- Diesel fuels according to EN 590
  - (≤0.0010% Sulfur – EU: Level IIIB and higher)
- Diesel fuels according to ASTM D975
  - (≤0.0015% Sulfur – EPA: Tier 4 interim and higher)

Never store fuel in galvanized containers!

Bio diesel:

According to EN 590 and ASTM D975, a specific portion of bio diesel is permitted in the fuel.

Depending on the country of origin, bio diesel can be produced from different plant materials and thus have different properties.

Affected by temperature, atmospheric oxygen and time, these bio diesel components in the fuel may decompose in the fuel and thus cause damages within the fuel system.

The fuel must be filtered before it is filled into the machine when it has been supplied in barrels or canisters. This procedure prevents malfunctions in the fuel system caused by contamination.

2.7.5 Engine coolant recommendation

In fluid-cooled engines, the cooling fluid must be treated and monitored to prevent engine damage.

PRELIMINARY Subject to Revision

Water quality:

An important factor for treating the cooling fluid is the correct water quality.

As a rule, clear and clean fresh water complying with the following analysis values must be used:

Characteristic		Value
pH value		6.5 - 8.5
Chlorine (Cl)	[mg/l]	max. 100
Sulfate (SO_4)	[mg/l]	max. 100
Total hardness ($CaCO_3$)	[mmol/l] [mg/l]	3.56
	[°dGH]	356
	[°e]	25.0
	[°fH]	35.6

Tab. 37 Water quality parameters for cooling water

Contact the local water utilities for information regarding water quality. If the water does not meet the parameters above, it must be treated.

If no suitable water is available, distilled or demineralized water shall be used for preparing the coolant. Seawater, brackish water, brines and industrial wastewater are not suitable. Salts may promote corrosion or disruptive deposits.

Coolant quality:

Within the scope of further technical development, new corrosion inhibitors/antifreeze have been approved by the engine manufacturer.

Compared to the previously approved corrosion inhibitors/antifreeze, they feature the following advantages:

- Fewer deposits in the engine cooling system
- Improved heat flow
- Higher environmental sustainability

The coolant (cooling fluid) is treated by adding anti-freeze with corrosion protection additives on the basis of ethylene glycol to the water.

Coolant must meet the specifications of the engine manufacturer DEUTZ.

➤ Do not use a corrosion inhibitor/antifreeze that has not been approved by the engine manufacturer.

➤ Do not use any impermissible mixing ratios of corrosion inhibitor/antifreeze and water.

Further information See chapter 10.4.1.3 for information on preparing/mixing the coolant to be used.

Initial filling of corrosion inhibitor/antifreeze:

For the initial filling, the engine water cooler is filled with a mixture of the following liquid components:

Components	Description	Percentages [% vol.]
Corrosion inhibitor/antifreeze	Glysantin® G40®	50

PRELIMINARY Subject to Revision

Components	Description	Percentages [% vol.]
Water		50

Tab. 38 Initial filling of engine water cooler

Miscibility with other corrosion inhibitors/antifreeze agents:

We do not recommend mixing with different corrosion inhibitors/antifreeze agents even if from the same manufacturer. This can result in significantly reduced corrosion protection/antifreeze and may damage the engine cooling system and consequently the engine. Mixtures of different corrosion inhibitors/antifreeze agents generally provide a lower performance than the specially balanced active components of one coolant type.

Therefore, the use of different corrosion inhibitors/antifreeze agent is only allowed after consulting with and approval from the engine manufacturer!

2.7.6 Reduction agent

Feature	Specification
Type	Urea solution AUS 32
Designation	DEF (Diesel Exhaust Fluid) AdBlue®
Quality	according to EN 70070/ISO 22241 or ATSTM D 7821
Application temperature [°F]	12 ... 113
Switching point for torque reduction motor (Fuel level of the fuel tank) [%]	approx. 14

Tab. 39 Reduction agent

2.7.7 Fluid volumes

Description	Fluid volume [gal]
Engine oil	3.43
Fuel	52.83
Coolant	6.40
Reduction agent	5.28

Tab. 40 Fluid volumes

2.7.8 Batteries

Feature	Value
Voltage [V]	24 (2 x 12)
Capacity [Ah]	2 x 100

PRELIMINARY
Subject to Revision

Feature	Value
PTC testing current [A] (according to EN 50342)	850

Tab. 41 Batteries

Further information Depending on machine equipment, a higher capacity battery may be required. See chapter 2.8.2.

2.8 Options

2.8.1 Air treatment options

2.8.1.1 Option dc
Fresh air filter

Feature	Value
Maximum working pressure [psig]	232
Minimum ambient temperature [°F]	34.7
Maximum ambient temperature [°F]	86

Tab. 42 Fresh air filter conditions

2.8.1.2 Air quality at the compressed air outlets

Interrelation between compressed air treatment and compressed air quality:

Air treatment		Compressed air quality	
Option designation	Components	Characteristics	Abbreviation
da	■ Aftercooler ■ Centrifugal separator	Cool and condensate-free	A
da + df	■ Aftercooler ■ Centrifugal separator ■ Heat exchanger	Heated and dry (lockable)	W
da + dd	■ Aftercooler ■ Centrifugal separator ■ Filter combination	Cool and technically oil-free	F
da + dd + df	■ Aftercooler ■ Centrifugal separator ■ Filter combination ■ Heat exchanger	Heated and technically oil-free (lockable)	G

Tab. 43 Interrelation between compressed air treatment and compressed air quality

PRELIMINARY Subject to Revision

The compressed air outlets at the air distributor are labeled with the identifiers of compressed air quality.

2.8.2 Option ba Low temperature equipment

2.8.2.1 Ambient conditions

Installation	Limit value
Maximum elevation ASL* [ft]	3000
Minimum ambient temperature [°F]	–13
Maximum ambient temperature [°F]	113
* Higher altitudes are permissible only after consultation with the manufacturer	

Tab. 44 Ambient conditions, low temperature equipment

2.8.2.2 Option bb Engine coolant pre-heating

Further information Section 2.8.3 provides the data for the coolant pre-heating system of the diesel engine.

2.8.2.3 Option bd Batteries

Characteristic	Value
Voltage [V]	24 (2 x 12)
Capacity [Ah]	2 x 135
PTC testing current [A] (according to EN 50342)	1000

Tab. 45 Batteries, low-temperature equipment

2.8.3 Option bb; od Auxiliary electrical systems

Power supply connection details:

Mains supply	Value
Mains voltage [V / 1-phase / N / PE]	240
Frequency [Hz]	50
Supply cable cross-section [AWG] (Cu multi-core)	3 x AWG10
User's fusing [A]	16

Tab. 46 Power supply connection details

PRELIMINARY Subject to Revision

Option bb **Diesel engine coolant pre-heating:**

Coolant pre-heating device	Value
Voltage [V]	240
Power [W]	1000

Tab. 47 Technical data – Coolant pre-heating device

Option od **Battery charger:**

Battery charger	Value
Type	24V DC / 10A
Charging voltage [V]	27.4
Charging current [A]	>0.5
Maximum charging current [A]	4
Protection class	IP 54

Tab. 48 Battery charger specification

2.8.4 Option oc GSM/GPS unit

Feature	Specification
Supplier/Manufacturer	Proemion
Type	CANlink mobile 5***

Tab. 49 GSM/GPS unit

PRELIMINARY Subject to Revision

3 Safety and Responsibility

3.1 Basic instructions

The machine is manufactured to the latest engineering standards and acknowledged safety regulations. Nevertheless, dangers can arise through its operation:

- danger to life and limb of the operator or third parties,
- Impairments to the machine and other material assets.

⚠ Disregard of warning or safety instructions can cause serious injuries!

➤ Use this machine only if it is in a technically perfect condition and only for the purpose for which it is intended; observe all safety measures and the instructions in the service manual!

➤ Immediately rectify (have rectified) any faults that could be detrimental to safety!

3.2 Specified use

The machine is intended solely for generating compressed air for industrial use. Any other use is considered incorrect. The manufacturer is not liable for any damages that may result from incorrect use. The user alone is liable for any risks incurred.

➤ Keep to the specifications listed in this service manual.

➤ Operate the machine only within its performance limits and under the permitted ambient conditions.

➤ Do not use compressed air for breathing purposes unless it is specifically treated.

➤ Do not use compressed air for any application that will bring it into direct contact with food products unless it is specifically treated.

3.3 Incorrect Use

Improper usage can cause damage to property and/or (severe) injuries.

➤ Only use the machine as intended.

➤ Never direct compressed air at persons or animals.

➤ Do not use untreated compressed air for breathing purposes.

➤ Do not allow the machine to take in toxic, acidic, flammable, or explosive gases or vapors.

➤ Do not operate the machine in areas in which specific requirements with regard to explosion protection are in effect.

3.4 User's Responsibilities

3.4.1 Observe statutory and universally accepted regulations

➤ Observe relevant statutory and accepted regulations during operation, transporting and maintenance of the machine.

PRELIMINARY Subject to Revision

3.4.2 Determining personnel

Suitable personnel are experts who, by virtue of their training, knowledge, and experience as well as their knowledge of relevant regulations can assess the work to be done and recognize the possible dangers involved.

Authorized operators possess the following qualifications:

- are of legal age,
- are familiar with and adhere to the safety instructions and sections of the service manual relevant to operation,
- have received adequate training and authorization to operate vehicles and electrical and compressed air devices.

Authorized maintenance personnel possess the following qualifications:

- are of legal age,
- have read, are familiar with and adhere to the safety instructions and sections of the service manual applicable to maintenance,
- are completely familiar with the safety concepts and regulations of motor vehicle, electrical and compressed air engineering,
- are able to recognize the possible dangers of motor vehicle, electrical and compressed air devices and take appropriate measures to safeguard persons and property,
- have received adequate training in and authorization for the safe installation and maintenance of this machine.

Authorized transport personnel possess the following qualifications:

- are of legal age,
- are familiar with and adhere to the safety instructions and sections of the service manual relevant to transporting,
- are trained and authorized in safe vehicle transporting,
- are familiar with the safety regulations relating to handling motor vehicles and transport goods,
- are able to recognize the possible dangers of motor vehicles and take appropriate measures to safeguard persons and property.

➤ Ensure that personnel entrusted with operation, maintenance and transporting are qualified and authorized to carry out their tasks.

3.4.3 Complying with inspection schedules and accident prevention regulations

The machine is subject to local inspection schedules.

➤ Have the pre-commissioning inspection carried out according to the Ordinance on Industrial Safety and Health, §15.

➤ Carry out recurring inspections:
The user must ensure that the machine's safety devices are checked for function as required or at least annually.

➤ Carry out oil changes:
The user must ensure that the cooling oil is changed as required or at least annually and the oil change must be documented. Intervals may be varied if an analysis proves that the oil is still usable.

PRELIMINARY
Subject to Revision

➤ Keep to inspection intervals in accordance with the Ordinance on Industrial Health and Safety with maximum intervals as laid down in §16:

Inspection	Inspection interval	Inspection authority
Equipment inspection	Before commissioning	Approved supervisory body.
Internal inspection	Every 5 years after commissioning or the last inspection	Contact an authorized KAESER service representative.
Strength test	Every 10 years after commissioning or the last inspection	Contact an authorized KAESER service representative.

Tab. 50 Inspection intervals according to Ordinance on Industrial Health and Safety

Checking the lifting point

The user is responsible for ensuring that the machine's lifting point and fixings are inspected according to national regulations for wear and damage.

➤ Have lifting point checked.

Lifting point is not in order: The machine must not be transported by crane. Have the machine repaired immediately.

3.4.4 Taking the machine for general inspection

To ensure safety on public roads, every vehicle owner is obliged to have his vehicle inspected in regular intervals. A trailer will be inspected to determine if it is road-worthy and compliant with safety standards.

Take the machine as trailer to an approved inspection authority in specified intervals for general inspection pursuant to Section 29 of the German Road Traffic Safety Act (or the corresponding national authority).

These intervals are determined by:

- Date of initial registration of the machine as trailer on public roads
- Permissible overall weight of the trailer

1. Take the machine for general inspection at due date.

General inspection intervals:

Machine weight [lb]	≤ 1650	< 7700	> 7700
1. Inspection interval after initial registration			
Interval [months]	36	24	12
Further inspection intervals			
Interval [months]	24	24	12

Tab. 51 General inspection intervals

PRELIMINARY Subject to Revision

3.4.5 Documenting the mileage of the machine as trailer

The kilometres of the machine actually travelled as a trailer with the towing vehicle are the determining factor for maintenance tasks at the chassis. To record the actually travelled kilometres, we recommend that you maintain a logbook for the machine. This allows you document the actually travelled kilometres of the machine as trailer even when different towing vehicles are used and to complete any maintenance tasks in a timely manner.

1. Create a logbook for the machine as trailer.
2. Enter all longer transports of the machine in a logbook.
3. Carry out (or have carried out) maintenance of the chassis according to the corresponding maintenance plan.

3.5 Dangers

Basic instructions

The following describes the various forms of danger that can occur during machine operation.

Basic safety instructions are found in this service manual at the beginning of each chapter in the section entitled 'Safety'.

Warning instructions are found before a potentially dangerous task.

3.5.1 Safely dealing with sources of danger

The following describes the various forms of danger that can occur during machine operation.

Exhaust fumes

Exhaust gases from combustion engines contain carbon monoxide, a color- and odor- less but highly toxic gas. The inhalation of minute quantities can be lethal.
Furthermore, diesel exhaust contains soot particles, some of which are noxious.

- ➤ Do not inhale exhaust fumes.
- ➤ Park the machine in such a manner that the exhaust cannot blow towards the operators.
- ➤ Never use the machine in enclosed spaces, only in the open.

Fire and explosion

Spontaneous ignition and combustion of fuel can result in serious injury or death.

- ➤ Do not allow open flames or sparks at the place of use.
- ➤ Do not smoke while refueling.
- ➤ Never refuel the machine when it is running.
- ➤ Do not allow fuel to overflow.
- ➤ Wipe up spilled fuel immediately.
- ➤ Provide a fire extinguisher in the immediate vicinity.
- ➤ For operation in combustible environment, fit the machine with an exhaust silencer (Option la).

Hot coolant

The cooling system of a liquid-cooled engine at running temperature is under high pressure. Coolant can spray out when the filler cap is opened causing severe burns.

PRELIMINARY
Subject to Revision

- ➤ Let the machine cool down before opening the cooling system.
- ➤ Unscrew the filler cap carefully by a quarter to half a turn at first. Remove the filler cap only when pressure has escaped completely.

Electricity

Touching voltage-carrying components can result in electric shocks, burns, or death.

- ➤ Allow only qualified and authorized electricians or trained personnel under the supervision of a qualified and authorized electrician to carry out work on electrical equipment according to electrical engineering regulations.
- ➤ Check regularly that all electrical connections are tight and in proper condition.
- ➤ Switch off any external power sources.
  For example, the connections to the electrical engine cooling water pre-heater.

Forces of compression

Compressed air is contained energy. Uncontrolled release of this energy can cause serious injury or death. The following information concerns work on components that could be under pressure.

- ➤ Wait until the compressor has automatically vented. (Check the pressure gauge: it must read 0 psig!)
- ➤ Then open an outlet valve carefully to ensure that the line between the minimum pressure / check valve and the compressed air outlet is vented.
- ➤ Do not carry out welding, heat treatment, or mechanical modifications to pressurized components (e.g. pipes and vessels) as this influences the component's resistance to pressure.
  The safety of the machine is then no longer ensured.

Compressed air quality

The composition of the compressed air must be suitable for the actual application in order to preclude health and life-threatening dangers.

- ➤ Use appropriate systems for air treatment before using the compressed air from this machine as breathing air (fresh air reinforcement) and/or for the processing of food products.
- ➤ Use food-grade cooling oil whenever compressed air is to come into contact with food products.

Spring forces

Springs under tension or compression store energy. Uncontrolled release of this energy can cause serious injury or death.
Minimum pressure / check valves, safety relief valves, and inlet valves are powerfully spring-loaded.

- ➤ Do not open or dismantle any valves.

Rotating components

Touching the fan wheel, the coupling, or the belt drive while the machine is switched on can result in serious injury.

- ➤ Do not open the access doors or panels while the machine is running.
- ➤ Switch off and lock out the machine and check that no voltage is present before opening the access doors or canopy.

PRELIMINARY
Subject to Revision

- ➤ Wear close-fitting clothes and a hair net if necessary.
- ➤ Ensure that all covers and safety guards are in place and secured before restarting.

Temperature

The operation of the combustion engine and the compression generate high temperatures. Touching hot components may cause injuries.

- ➤ Avoid contact with hot components.
  These include, for example, engine, compressor airend, oil and compressed air lines, coolers, and oil separator tank. Any objects in or near the flow of exhaust gas or discharged cooling air will become very hot.
- ➤ Wear protective clothing.
- ➤ Wear protective gloves when connecting or disconnecting compressed air hoses.
- ➤ Allow the machine to cool down before commencing any maintenance work.
- ➤ If welding is carried out on or near the machine, take adequate measures to prevent sparks or heat from igniting oil vapors or parts of the machine.

Noise

The enclosure absorbs the machine noise to a tolerable level. This function will be effective only if the bodywork is closed.

- ➤ Operate the machine only with closed bodywork and intact sound insulation.
- ➤ Wear hearing protection if necessary.
  The blowing-off of the safety relief valve can be particularly loud.
- ➤ Never generate compressed air without air consumers being connected.

Operating fluids/materials

The used operating fluids and materials can cause adverse health effects. Suitable safety measures must be taken in order to prevent injuries.

- ➤ Strictly forbid fire, open flame, and smoking.
- ➤ Follow safety regulations when dealing with fuel, lubricants, antifreeze, and chemical substances.
- ➤ Avoid contact with skin and eyes.
- ➤ Do not inhale fumes or vapors from fuel or oil.
- ➤ Do not eat or drink while handling fuel, cooling and lubricating fluids, or antifreeze.
- ➤ Keep suitable fire extinguishing agents ready for use.
- ➤ Use only KAESER approved operating materials.

Unsuitable spare parts

Unsuitable spare parts compromise the safety of the machine.

- ➤ Use only spare parts approved by the manufacturer for use in this machine.
- ➤ Use only genuine KAESER replacement parts on pressure bearing parts.

Conversion or modification of the machine

Modifications, additions to, or conversions of the machine can result in unpredictable hazards.

- ➤ Do not convert or modify the machine!

PRELIMINARY
Subject to Revision

- ➤ Do not install any non-approved additional components.
- ➤ Do not make any changes to the machine that will increase its weight beyond the permissible limit and/or endanger its safe use or transportation.
- ➤ Obtain written approval by the manufacturer prior to any technical modification or expansion of the machine or controller.

3.5.2 Save handling of the DEF reduction agent

⚠ WARNING

Ammonia fumes!
When DEF (Diesel Exhaust Fluid) is heated beyond 122° F for some time, it may decompose resulting in Ammonia fumes.
Ammonia fumes can cause severe health damage.

- ➤ *Replenish DEF only when the machine has cooled down.*
- ➤ *Do not inhale DEF fumes.*

Handling DEF contaminated with foreign matter:

Individual components of the SCR system will react very sensitively to even the smallest traces of contaminants in DEF.

- ➤ Always use clean containers and bowls reserved for this purpose when handling DEF.
- ➤ Do not use DEF containing contaminant traces. Dispose of the contaminated liquid according to environmental protection regulations.

Handling fluids contaminated with DEF:

Fluids contaminated with DEF may cause damage to the machine's components.
For example, a small amount of DEF in the cooling water circuit will damage thermostats and sensors.

- ➤ Ensure that DEF is stored separately from other fluids such as fuel, coolants and lubricants as well as hydraulic and brake fluids, and that it is never used in the same containers and bowls.
- ➤ Do not use any fluids containing traces of DEF. Dispose of the contaminated fluids according to environmental protection regulations.

3.5.3 Safe machine operation

The following is information supporting you in the safe handling of the machine during individual product life phases.

Personal protective equipment

When working on the machine you may be exposed to dangers that can result in accidents with severe adverse health effects.

- ➤ Wear protective clothing as necessary.

Suitable protective clothing (examples):

- Safety work wear
- Protective gloves
- Safety boots

PRELIMINARY Subject to Revision

- Eye protection
- Ear protection

3.5.3.1 Transport

The weight and size of the machine require safety measures during its transport to prevent accidents.

➤ Allow transport only by personnel trained in safely dealing with motor vehicles and the transport of goods.

➤ Ensure that no persons are on the machine when transporting.

Transport as trailer

Non-compliance with the basic rules for a safe trailer operation may cause severe accidents during machine transport.

➤ The maximum permissible load for the towing vehicle coupling and the maximum coupling load given for the machine must not be exceeded.

➤ Avoid causing a shift in the center of gravity by an excessive or incorrectly distributed load.

➤ Do not tow in such a way as to impose excessive stress on the machine or chassis.

➤ Adjust towing speed to accommodate ground and weather conditions. This applies particularly to unpaved roads and when taking curves.

➤ The towbar must be parallel with the ground otherwise towing instability can develop, resulting in damage to the machine and/or towing vehicle.

➤ Before moving the machine, make sure any security devices (e.g. anti-theft chain) are released.

Transport as trailer on public roads

➤ Do not tow machines without service brake on public roads.

➤ Do not tow machines without illumination and signaling equipment on public roads.

➤ Ensure all running gear, including chassis, wheels, brakes, signalling and lighting, is in safe condition.

➤ The local laws and regulations regarding the use of public roads must be observed.

Transporting with a crane

Non-compliance with the safety regulations for load suspension and hoisting equipment may cause severe accidents during lifting and moving the machine with cranes.

➤ Do not enter the danger zone while the machine is being lifted.

➤ Never lift and move the machine over people or occupied buildings.

➤ Avoid extreme weight shifting caused by additional loads or additions (tilting).

➤ Do not exceed the lifting capacity on the machine's lifting point (lifting eye).

➤ Only the designated lifting point should be used to attach lifting gear and under no circumstances are handles, tow-bar or other components to be used.

➤ Use only hooks and shackles that comply with local safety regulations

➤ Do not attach cables, chains or ropes directly to the machine's lifting eye.

➤ Do not manipulate the crane suspension system, in particular the holding points of the crane lifting eye.

PRELIMINARY
Subject to Revision

- ➤ If screwed crane fixings had to be removed, please use only new self-locking nuts when installing.
- ➤ Avoid jerking when lifting, as this may damage components.
- ➤ Loads must be slowly lifted and carefully set down.
- ➤ Never allow the load to hang from the crane longer than necessary.

The following are forbidden:

- Air transport of the machine by slinging beneath a helicopter.
- Dropping the machine by parachute.

3.5.3.2 Installation

The operator must ensure that only authorized personnel has access to the machine.

General instructions

A suitable installation location for the machine prevents accidents and faults.

- ➤ Do not position the machine directly against a wall. A build up of heat from the exhaust can damage the machine.
- ➤ Ensure accessibility so that all work on the machine can be carried out without danger or hindrance.
- ➤ Do not operate in areas in which specific requirements with regard to explosion protection are in force.
  For instance, the requirements of ATEX directive 94/9/EC "Equipment and Protective Systems intended for use in Potentially Explosive Atmospheres".
- ➤ Ensure adequate ventilation.
- ➤ Place the machine in such a manner that the working conditions in its environment are not impaired.
- ➤ Comply with limit values for ambient temperature and humidity.
- ➤ The intake air must not contain any damaging contaminants,

Damaging contaminants are for instance:

- Exhaust gases from combustion engines,
- Combustible, explosive or chemically unstable gases or vapors,
- Acid- or base-forming chemicals such as ammonia, chlorine, or hydrogen sulfide.

- ➤ Do not position the machine in the warm exhaust air flow from other machines.
- ➤ Keep suitable fire extinguishing agents ready for use.

Parking the machine

Improper parking and use of the parked machine endangers personnel and material.

- ➤ To park the machine, select an even and solid surface which is capable of bearing the machine's weight.
- ➤ Move the machine only with a towing vehicle.
- ➤ Secure the parked machine:

PRELIMINARY
Subject to Revision

- Lower the prop stand / wind down the jockey wheel.
- Chock the wheels to prevent unwanted movement.
  - Place chocks under the wheels.
  - Pull on the parking brake.

➤ Unauthorized persons must not be present in the parking area of the machine. The parking area must be properly secured.

➤ The machine – the chassis and the towing mechanism in particular – must not be stepped on or used for sitting.

➤ Do not place additional loads on the machine (e.g. excavator bucket as anti-theft measure).

3.5.3.3 Commissioning, operation and maintenance

During commissioning, operation and maintenance you may be exposed to dangers resulting from, e.g., electricity, pressure and temperature. Careless actions can cause accidents with severe adverse effects for your health.

➤ Allow maintenance work to be carried out only by authorized personnel.

➤ Wear close-fitting, flame-resistant clothing. Wear protective clothing as necessary.

➤ Switch off the machine and lock out the supply disconnecting device.

➤ Depressurize all pressurised components and enclosures.

- Wait until the machine has automatically vented.
- Carefully open the compressed air outlet valve.
- Check: The pressure gauge must read 0 psig!

➤ For maintenance and repair work, isolate machines with "automatic start/stop" (Option ob) from the compressed air network and secure against automatic start.

➤ Allow the machine to cool down.

➤ Do not open the body while the machine is switched on.

➤ Do not open or dismantle any valves.

➤ Use only spare parts approved by KAESER for use in this machine.

➤ Operate the machine only in technically sound condition.

➤ Carry out regular inspections:

- for visible damage and leakage,
- of safety devices,
- of the EMERGENCY STOP device,
- of parts needing monitoring.

➤ Pay particular attention to cleanliness during all maintenance and repair work. Cover components and openings with clean cloths, paper or tape to keep them clean.

➤ Do not leave any loose components, tools or cleaning rags on or in the machine.

➤ Components removed from the machine can still be dangerous.
Do not attempt to open or destroy any components taken from the machine.

➤ Self-locking nuts removed for the installation must not be reused but replaced by new nuts, because the non-positive safety is no longer ensured.

➤ Use only suitable compressed air hoses.

PRELIMINARY
Subject to Revision

Compressed air hoses must meet the following requirements:

- they are of the right type and size for the highest permissible machine working pressure,
- they are not damaged, worn or of reduced quality,
- they have couplings and connections of the right type and size.

➤ Wear protective gloves when connecting or disconnecting compressed air hoses.
➤ Make sure compressed air hoses are depressurized before disconnecting from the machine.
➤ Secure the open end of an air hose before applying air pressure. An unsecured hose may whip and cause injury.
➤ At working pressures>100 psi, compressed air hoses should be secured by a cable to their respective outlet valves.
➤ Connect and operate only suitable air tools.

- The air tools must meet the set output pressure of the machine.
- Use a pressure reducer for air tools requiring a lower pressure.
- Use compressed air tools only with the pressure appropriate for its purpose (tool working pressure).

3.5.3.4 De-commissioning, storage and disposal

Improper handling of old operating fluids and components represent a danger for the environment.

➤ Drain off fluids and dispose of them according to environmental regulations.
These include, for example, fuel, engine oil and compressor cooling oil and engine coolant.
➤ Dispose of the machine in accordance with local environmental regulations.

3.5.4 Organizational Measures

➤ Designate personnel and their responsibilities.
➤ Give clear instructions on reporting faults and damage to the machine.
➤ Give instructions on fire reporting and fire-fighting measures.

3.5.5 Danger areas

The table gives information on areas dangerous to personnel.
Only authorized personnel may enter these areas.

Task	Danger area	Authorized personnel
Transport	Within a 10 ft radius of the machine.	Operating personnel to prepare for transport. No personnel during transport.
	Beneath the lifted machine.	No personnel!
Commissioning	Within the machine. Within a 3 ft radius of the machine.	Maintenance personnel
Operation	Within a 3 ft radius of the machine.	Operating personnel
Maintenance	Within the machine. Within a 3 ft radius of the machine.	Maintenance personnel

Tab. 52 Danger areas

PRELIMINARY
Subject to Revision

3.6 Safety devices

Safety devices ensure safe working with the machine.

- ➤ Do not change, bypass or disable safety devices.
- ➤ Regularly check safety devices for their correct function.
- ➤ Do not remove or obliterate labels and notices.
- ➤ Ensure that labels and notices are clearly legible.

Further information More information on safety devices is contained in chapter 4.5.

3.7 Safety signs

The tables list the various safety signs used and their meanings. The figures show the position of the safety signs on the machine, inside and outside.

During cleaning or maintenance work it must be ensured that the attached safety signs are not damaged or removed. Have missing or illegible signs replaced!

Safety signs outside:

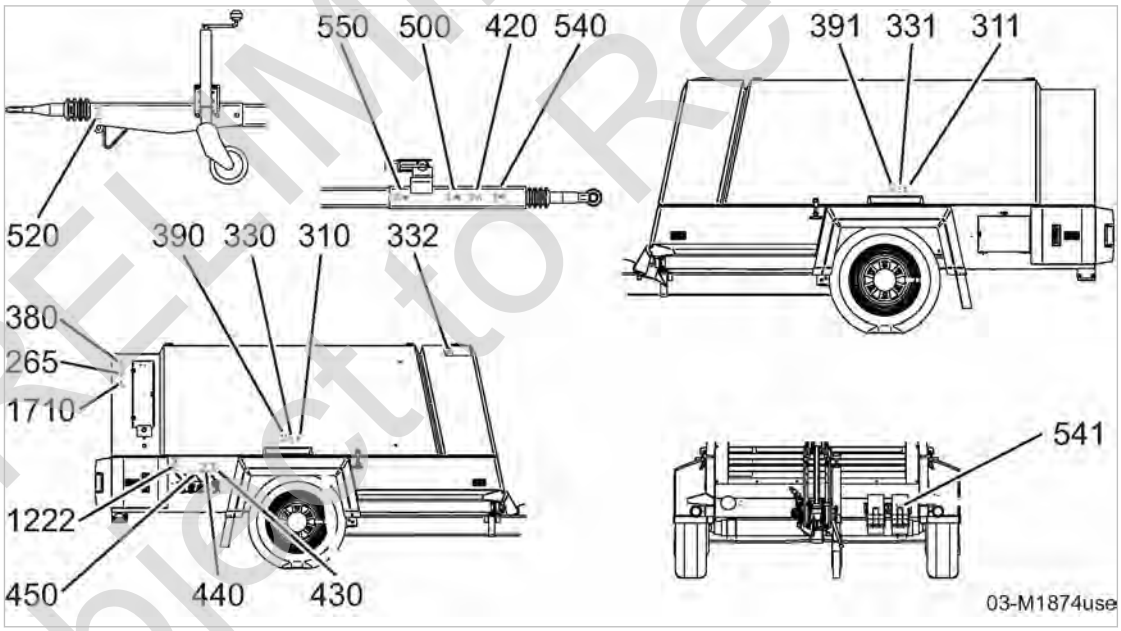

Fig. 3 Location of safety signs (outside)

PRELIMINARY
Subject to Revision

Location	Sign	Meaning
265		Caution! Injury and/or machine defects caused by improper use! ➤ Maintenance should be performed by properly trained personnel only. ➤ Read and understand manual and all safety labels before switching the machine on. ➤ Never remove or cover safety labels.
310 311		Warning! Injury or damage from open machine! ➤ Operate the machine only when closed. ➤ Transport the machine only when closed.
330 331 332		Caution! Hot surface! Risk of burns caused by contact with hot components! ➤ Do not touch the surface. ➤ Let the machine cool down. ➤ Wear long-sleeved garments (no synthetics such as polyester) and protective gloves.
380		Danger! Toxic gases in work area! ➤ Operate machine outdoors only. ➤ Ensure exhaust gases are vented to the outdoors. ➤ Do not inhale dangerous gases.
390 391	 	Warning! Rotating fan blades and V-belt drive! Severe injury could result from touching the fan blades and V-belt drive while it is rotating. ➤ Never switch the machine on without guard in place over the fan blade. ➤ Isolate completely from the power supply (battery disconnect switch) and ensure the supply cannot be switched on again.
420		Caution! Injury or damage can result because tongue weight on this equipment may be heavy! ➤ Do not lift drawbar by hand if weight is more than you can safely handle. ➤ See safety section of service manual.

(1) Only portable machines
(2) Only machines with option dc,
(3) Only machines with option ob

PRELIMINARY
Subject to Revision

Location	Sign	Meaning
430		Warning! Connect air hoses only in full compliance with OSHA standard 29 CFR 1926,302 (bX7). The required safety devices should be tested in accordance with their manufacturer's recommendations to verify that they reduce pressure in case of hose failure and will not nuisance trip with the hose and tool combinations in use.
440		Danger! Compressed air quality! Injury and/or contamination can result from breathing compressed air. Contamination of food can result from using untreated compressed air for food processing. ➤ Never breathe untreated compressed air! ➤ Air from this compressor must meet OSHA 29 CFR 1910.134 and FDA 21 CFR 178.3570 standards, if used for breathing or food processing. Use proper compressed air treatment. ➤ Food grade coolant must be used for food processing.
450	 	Warning! Loud noise and compressed air blast! Damage to hearing and injury if ball valve is opened without a compressed air hose being connected. ➤ Connect a compressed air hose. ➤ Open the ball valve.
500		Warning! Drawbar load and ground clearance! Danger of fishtailing, incorrect towing vehicle load, damage to the machine caused by rollover or contact with the ground. ➤ Always line up the drawbar so that the machine is level with the ground.
520		Warning! Always use safety chains! Chains hold trailer if connection fails. → You must: ■ Cross chains underneath coupling. ■ Allow stack for trailer to turn. ■ Attach chain hooks securely to tow vehicle frame.

(1) Only portable machines
(2) Only machines with option dc,
(3) Only machines with option ob

PRELIMINARY Subject to Revision

Location	Sign	Meaning
540[1]		Warning! Machine without breaks! Serious injury or death may result from uncontrolled movement when the unit is not safeguarded by chocks. ➤ Always use chocks before uncoupling and generally when the unit is not in motion. ➤ Do not move unit manually.
541[1]		Warning! Missing chock! Serious injury or death may result from uncontrolled movement when the unit is not safeguarded by chocks. ➤ Always fix chock for proper storage. ➤ Always replace missing chock immediately.
550		Danger! Uncontrolled tensioning of the breakaway cable! Danger of accident caused by travelling with the trailer parking brake applied. ➤ Never attach the breakaway cable to anything but the tow coupling to prevent unintentional tensioning when under way. ➤ Make sure the breakaway cable is not under tension. ➤ Ensure that the breakaway cable is fed through the cable guide.
1222[2]		Danger! Fresh air filter. Death or serious injury can result from breathing CO, CO_2 and toxic gas. ➤ Draw in only surrounding air of breathing quality.
1710[3]		Caution! Machine starts automatically! Severe injury can result from rotating components, electrical voltage and air pressure. ➤ Isolate completely from the power supply (battery disconnect switch) and ensure the supply cannot be switched on again (lock out). ➤ Check that no voltage is present.

[1] Only portable machines
[2] Only machines with option dc,
[3] Only machines with option ob

Tab. 53 Safety signs

PRELIMINARY Subject to Revision

Safety signs inside:

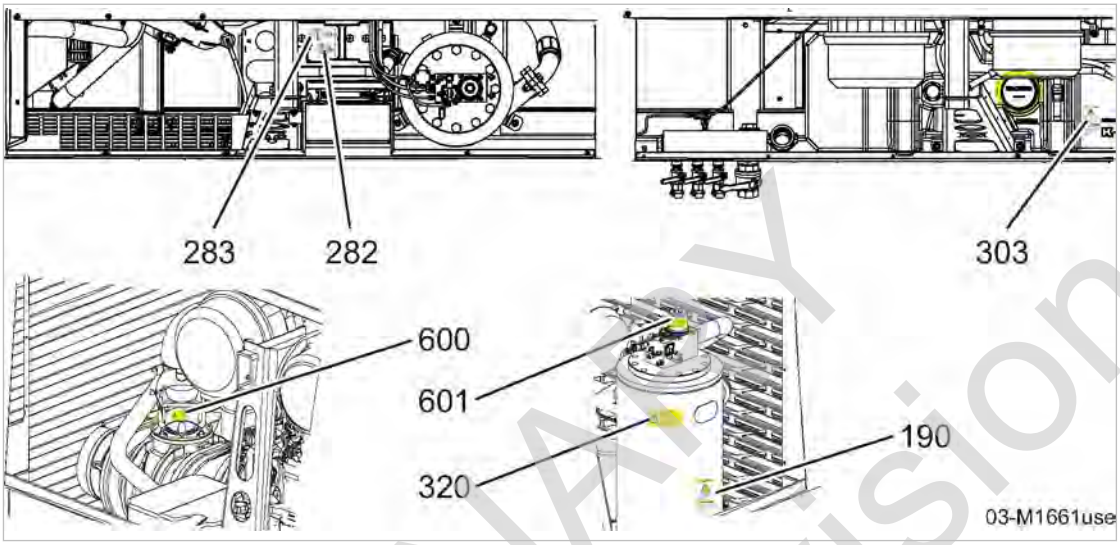

Fig. 4 Location of safety signs (inside)

Location	Sign	Meaning
190		Caution! Wrong cooling oil level! Risk of machine defects or rising oil consumption (oil content for pure air). ➤ Check cooling-oil level. ➤ Run the machine only with proper cooling-oil level.
282		Danger! Explosive hydrogen gas! Severe injury or death could result from exploding gas. ➤ Keep flames, sparks and other sources of ignition away.
283		Warning! Battery contains acid! Severe injury result from contact with battery acid. ➤ Do not allow battery acid to contact eyes, skin, clothing or painted surfaces. ➤ Do not attempt to jump-start if battery fluid is frozen. ➤ Due to risk of explosion, please ensure that you bring the battery up to a temperature of at least 60°F before attempting a jump start.
303		Danger! Fire or explosion caused by refueling! Severe injury or death result from inflaming fuel. ➤ Use diesel fuel only. ➤ NEVER attempt to refuel the compressor while it is operating. ➤ Always replace fuel filter cap after refueling. ➤ Always wipe up fuel spills which may occur inside the compressor enclosure and allow the machine to ventilate.

PRELIMINARY Subject to Revision

Location	Sign	Meaning
320		Warning! Loud noise and oil mist when safety relief valve opens! Ear damage and burns can result. ➤ Wear ear protection and protective clothes. ➤ Close all maintenance doors and cover panels.
600 601		Warning! Pressure and spring force! Serious injury or death can result from loosening or opening component that is under pressure and heavily spring loaded. ➤ Never open (dismantle) valve. ➤ Contact an authorized KAESER service representative.

Tab. 54 Safety signs

3.8 Noise control requirements

Tampering with the noise control system is prohibited!

Federal law prohibits the following acts or causing thereof:

- The removal or rendering inoperative by any persons, other than for purposes of maintenance, repair, or replacement, of any devices or element of design incorporated into any new compressor for the purpose of noise control prior to its sale or delivery to the ultimate purchaser or while it is in use; or
- the use of the compressor after such device or element of design has been removed or rendered inoperative by any person.

Among those acts included in the prohibition against tampering are the acts listed below:

- Removing any facing (doors, hood, service panels).
- Modifying the air inlet and outlet louvers.
- Modifying the air intake channels or hoses (if applicable).
- Modifying the air filter enclosure.
- Modifying the exhaust air silencer.
- Manipulating the machine's control and regulation system.

3.9 Emergencies

3.9.1 Correct actions in the event of a fire

Suitable extinguishing media:

- Foam
- Carbon dioxide
- Sand or earth

Unsuitable extinguishing agents:

- Strong jet of water

PRELIMINARY Subject to Revision

1. Keep calm.
2. Give the alarm.
3. If possible: Turn off engine using control devices.
4. Make safe:
   - Warn persons in danger
   - Help incapacitated persons
   - Close the doors
5. When trained accordingly: Attempt to extinguish the fire.

3.9.2 Treating injuries from handling operating fluids/materials

The following operating fluids/materials are in the machine:

- Fuel
- Lubricating oils
- Compressor cooling oil
- Engine coolant
- Battery electrolyte
- Reduction agent

Eye contact:

Fuel, oil and other fluids/materials can cause irritation.

➢ Rinse eyes thoroughly with lukewarm water and seek medical assistance immediately.

Skin contact:

Fuel, oil and other fluids/materials may irritate after prolonged contact.

➢ Wash thoroughly with skin cleaner, then with soap and water.

➢ Contaminated clothing should be intensively cleaned before reuse.

If inhaled:

Fuel and oil vapors impair breathing.

➢ Clear the respirator tract from fuel or oil vapor.
Any difficulty with respiration: seek immediate medical help.

If swallowed:

➢ Wash out the mouth immediately.

➢ Do not induce vomiting.

➢ Seek medical aid.

3.10 Warranty

This operator manual contains no independent warranty commitment. Our general terms and conditions of business apply with regard to warranty.

A condition of our warranty is that the machine is used for the purpose for which it is intended under the conditions specified.
Due to the multitude applications for which the machine is suitable the obligation lies with the user to determine its suitability for his specific application.

In addition, we accept no warranty obligation for:

- the use of unsuitable parts or operating materials,

PRELIMINARY Subject to Revision

- unauthorized modifications,
- incorrect maintenance,
- incorrect repair.

Correct maintenance and repair includes the use of original spare parts and operating materials.

➤ Obtain confirmation from KAESER that your specific operating conditions are suitable.

3.10.1 Noise emissions warranty

The manufacturer warrants to the ultimate purchaser and each subsequent purchaser that this air compressor was designed, built, and equipped to conform, at the time of sale to the first retail purchaser, with all applicable American EPA noise control regulations.

This warranty is not limited to any particular part, component, or system of the air compressor.

Defects in the design, assembly, or in any part, component, or system of the compressor which, at the time of sale to the first retail purchaser, caused noise emissions to exceed Federal standards are covered by this warranty for the life of the air compressor.

3.11 Identifying the effects of improper modifications

The machine and various modules are designed according to applicable regulations and are submitted for approval procedures by the relevant authorities (where applicable).

Concerned modules include:

- Compressor motor/engine
- Fuel supply
- Exhaust system
- Chassis (if available)
- Compressor
- Pressure-bearing components (e.g., valves, vessels, pipelines)

Remodeling or modifications can have the result that the interaction of the individual modules according to regulations is no longer ensured. Thus, the prerequisites required for approval by the authorities may no longer be given.

The concerned directives and regulations can be:

- Machinery directive
- Pressure vessel directive
- EMC directive
- Directive on environmental noise

In machines requiring a national road traffic permit, remodeling or modifications may adversely affect their approval for road traffic.

- Exhaust emission limits may not be met.
- The prerequisites for approval are no longer given.

Remodeling or modifications restrict the service work that can be performed for you (examples):

- Warranty (if directly and originally affected by the remodeling or modification)

PRELIMINARY
Subject to Revision

- Reduced replacement part supply (scope, delivery times)
- SIGMA CONTROL MOBIL:
  Program changes result in a reduced capability of software updating.

3.12 Environmental protection

The operation of this machine may cause dangers for the environment.

➤ Do not allow operating fluids/materials to escape into the environment or into the sewage system!

➤ Store and dispose of operating fluids/materials and replaced parts in accordance with local environment protection regulations.

➤ Observe relevant national regulations.
This applies particularly to parts contaminated with fuel, oil, coolants, reduction agents and acids.

For the emission output of the corresponding engine class to always comply with applicable requirements, the drive engine must only be operated, used and maintained in accordance with instruction provided to the end user.

Do not intentionally manipulate the engine management of the drive engine or operate it improperly or carry out deficient maintenance measures.

Intentional manipulations of the emission reduction system and its improper operation, especially deactivation or deficient maintenance of the exhaust gas after-treatment system or individual exhaust gas after-treatment components are not permitted.

Possible exhaust gas after-treatment components (if provided):

- Components for the reduction of particle emission
  - Diesel oxidation catalytic converter
  - Diesel particulate filter
- Components for the reduction of nitrogen oxide emissions
  - SCR catalytic converter with reduction agent addition

PRELIMINARY
Subject to Revision

4 Design and Function

4.1 Bodywork

Bodywork is understood to be the exterior of the machine mounted on the chassis.

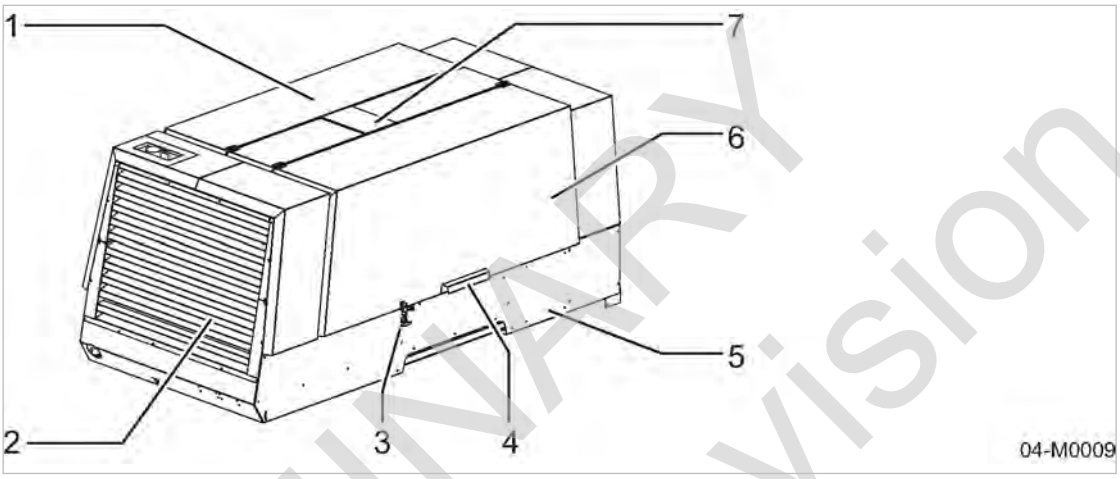

Fig. 5 Overview of bodywork

1. Right-hand wing door
2. Sound damping louver for cooler
3. Snap fastener
4. Handle
5. Lower body
6. Left-hand wing door
7. Cover for lifting eye

The bodywork has several functions when it is closed:

- Weather protection
- Sound insulation
- Guarding against touching
- Cooling air flow

The bodywork is not suitable for the following uses:

- Walking on, standing or sitting on.
- Use as resting place or storage of any kind of load.

⚠ CAUTION

Pinch hazard!
Severe injuries of the fingers if they are caught when closing doors and covers.

➤ *Work with caution.*
➤ *If necessary, wear protective gloves.*

Safe and reliable operation is only ensured when the bodywork is closed.
The wing doors are provided with handles for opening. Release the doors by the snap fasteners.
The doors are held open by gas springs.

PRELIMINARY Subject to Revision

4.2 Machine layout

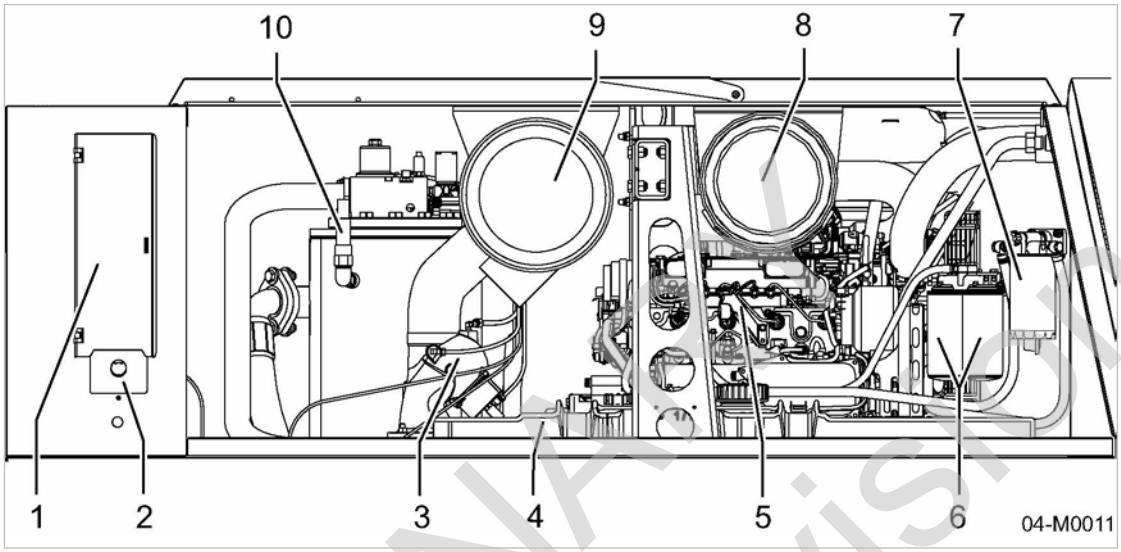

Fig. 6 Right-hand door opened

1. Control panel (cover closed)
2. «EMERGENCY STOP» pushbutton
3. Inlet valve
4. Fuel tank
5. Drive motor
6. Fuel filter
7. Fuel prefilter with water separator
8. Engine air filter
9. Compressor air filter
10. Safety valve

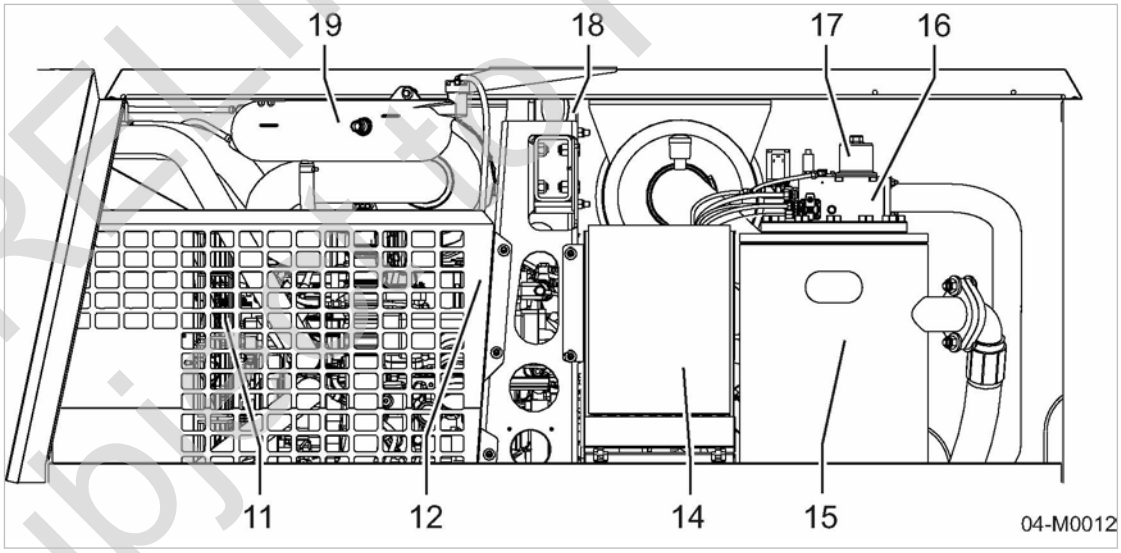

Fig. 7 Left-hand door opened

11. Fan
12. Safety screen
14. Control cabinet
15. Oil separator tank
16. Control valve with proportional controller
17. Minimum pressure check valve
18. Lifting eye
19. Coolant expansion tank

PRELIMINARY
Subject to Revision

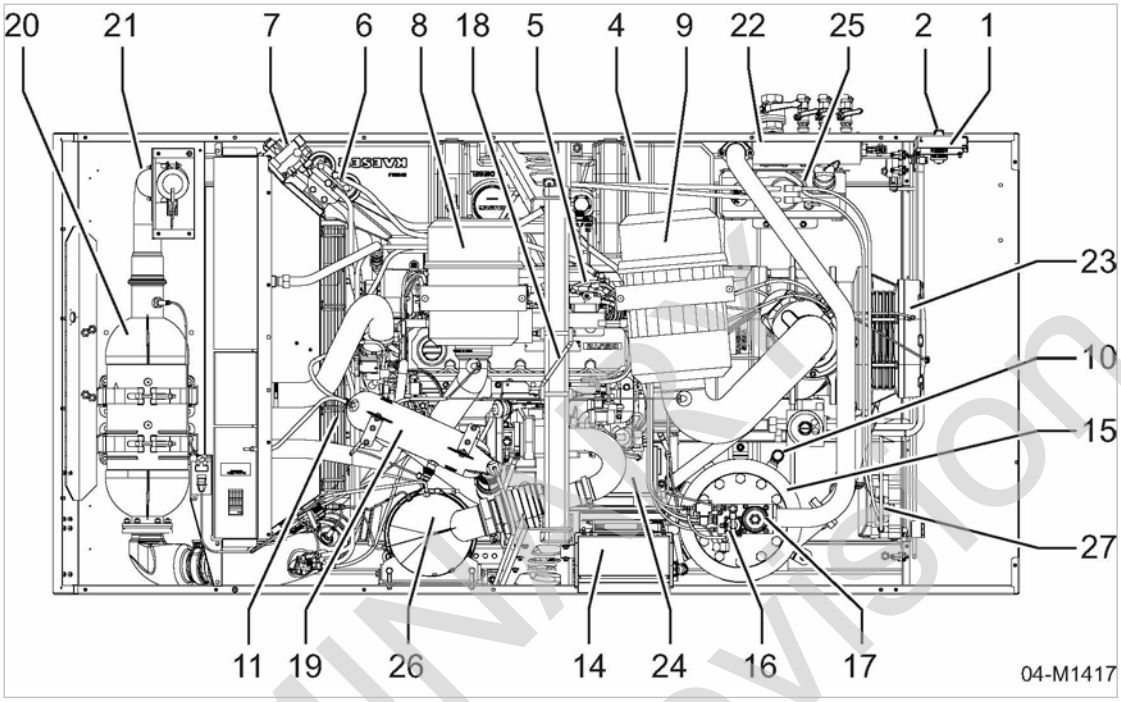

Fig. 8 Machine from above, roof removed

1 Control panel (cover closed)
2 «EMERGENCY STOP» key
4 Fuel tank
5 Drive motor
6 Fuel filter
7 Fuel prefilter with water separator
8 Engine air filter
9 Compressor air filter
10 Safety valve
11 Fan
14 Control cabinet
15 Oil separator tank
16 Control valve with proportional controller
17 Minimum pressure check valve
18 Lifting eye
19 Coolant expansion tank
20 SCR catalytic converter
21 Exhaust silencer
22 Air distributor
23 Airend
24 Battery
25 Reduction agent tank
26 Diesel particulate filter

PRELIMINARY
Subject to Revision

Machine from beneath, drain ports for operating fluids:

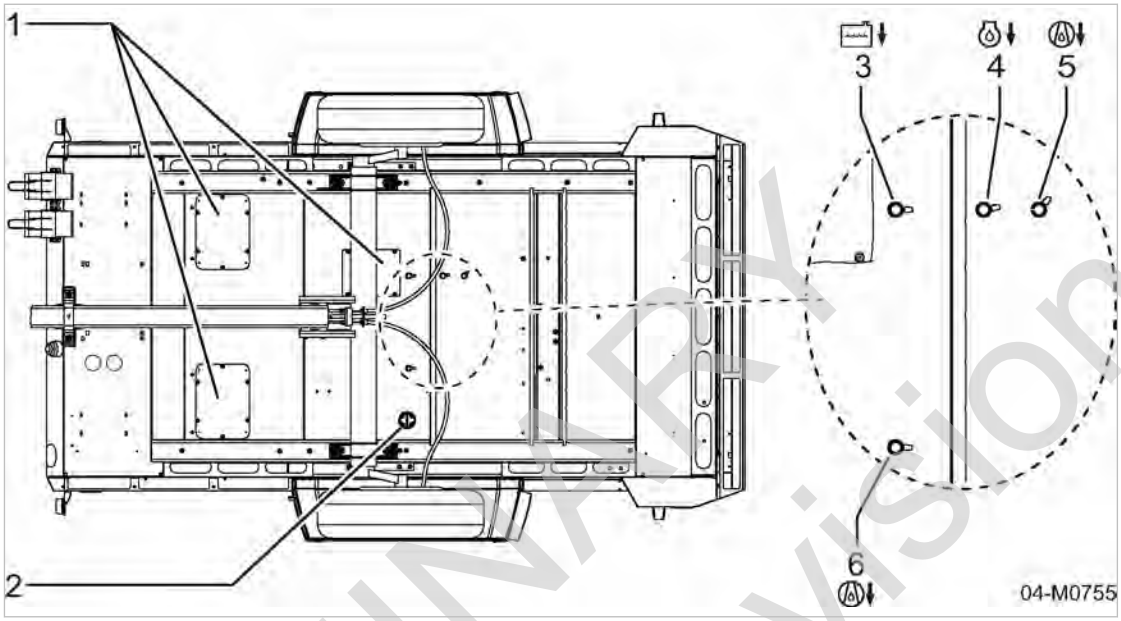

Fig. 9 View from beneath

1. Service opening, closed with sheet metal cover
2. Fuel tank drain port, closed with bung
3. Engine coolant drain
4. Engine oil drain
5. Oil separator tank drain, compressor
6. Oil cooler drain, compressor

4.3 Machine function

Machine function (without options)

Item numbers correspond to the pipe and instrument flow diagram (P&ID) in chapter 13.2.

PRELIMINARY
Subject to Revision

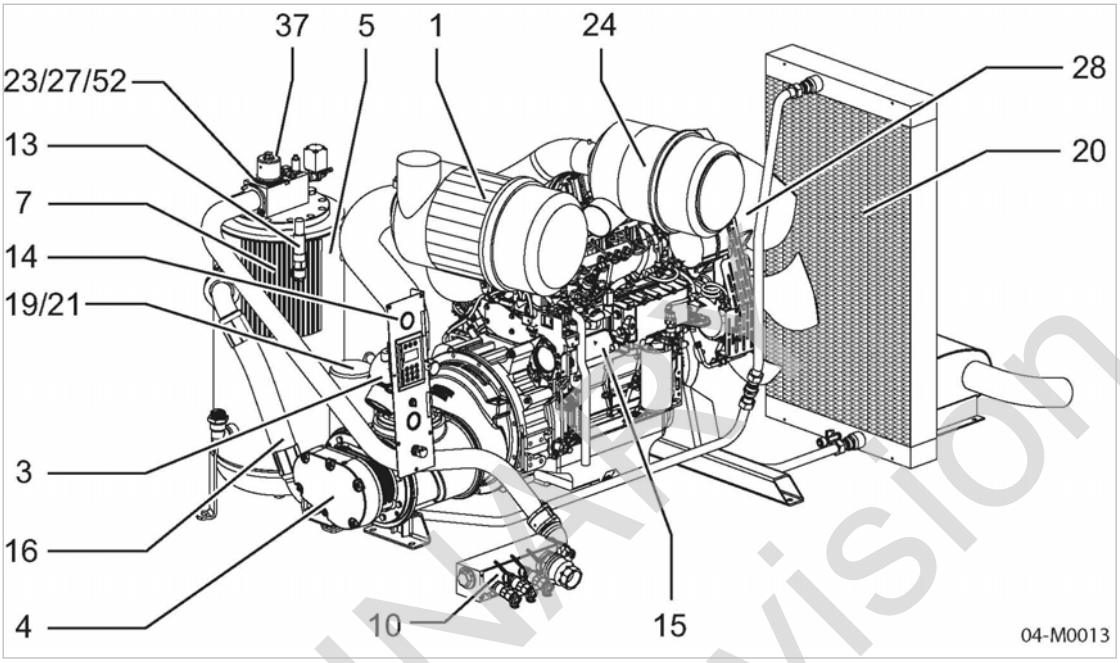

Fig. 10 Machine overview

1	Compressor air filter	19	Thermostatic valve (oil temperature control)
3	Inlet valve	20	Oil cooler
4	Airend	21	Oil filter
5	Oil separator tank	23	Proportional controller
7	Oil separator cartridge	24	Engine air filter
10	Air distributor	27	Venting valve
13	Safety relief valve	28	Fan
14	Pressure gauge (on the instrument panel)	37	Minimum pressure check valve
15	Engine	52	Control valve
16	Oil return line		

Ambient air is cleaned as it is drawn in through the filter 1.

The air is then compressed in the airend 4.

The airend is driven by an internal combustion engine 15.

Cooling oil is injected into the airend. It lubricates moving parts and forms a seal between the rotors themselves and between them and the airend casing. This direct cooling in the compression chamber ensures a very low airend discharge temperature.

Cooling oil recovered from the compressed air in the oil separator tank 5 gives up its heat in the oil cooler 20. The oil then flows through the oil filter 21 and back to the point of injection. Air pressure within the machine keeps the oil circulating. A separate pump is not necessary. A thermostatic valve 19 regulates and optimizes the cooling oil temperature.

Compressed air, freed of cooling oil in the oil separator tank 5, flows through the minimum pressure / check valve 37 into the air distributor 10. The minimum pressure/check valve ensures sufficient internal pressure to maintain cooling oil circulation.

The cooling fan 28 ensures optimum cooling of all components within the enclosure.

PRELIMINARY
Subject to Revision

4.4 Operating modes and control mode

4.4.1 Machine operating modes

The machine operates in the following modes:

- WARM-UP
  - The inlet valve is nearly fully closed.
  - The minimum intake air volume escapes via the venting valve.
  - The engine runs at minimum speed.
- LOAD
  - The inlet valve is open.
  - The engine runs at maximum speed.
  - The airend delivers compressed air.
- MODULATING
  - With the help of a control valve (the proportional controller) the degree of opening of the inlet valve is continuously varied in response to the air demand.
  - The load and fuel consumption of the engine rises and falls with the air demand.
  - The airend delivers compressed air.
- IDLE
  - The inlet valve is closed.
  - The control valve opens, allowing pressure in the oil separator tank to be applied to the inlet valve.
  - Compressed air then flows in a closed circuit through the airend, the oil separator tank and the control valve.
  - The pressure in the oil separator tank remains constant.
  - The engine runs at minimum speed.
- RUN-ON PERIOD/STANDSTILL
  - The inlet valve closes.
  - The venting valve opens to depressurize the machine.
  - Machine cools down.
  - The engine stops.

4.4.2 MODULATING control

The control system regulates the volume of air generated to match the actual demand. The machine keeps the working pressure constant by continuously varying the volumetric flow rate within the machine's regulating range, independent of the air demand.

With the help of an electrical control valve (the proportional controller), the opening and closing of the inlet valve is continuously varied in response to the actual air demand. The airend provides compressed air for connected consumers.

This continuous delivery regulation minimizes the fuel consumption of the engine. The load and fuel consumption of the engine rises and falls with the air demand.

PRELIMINARY
Subject to Revision

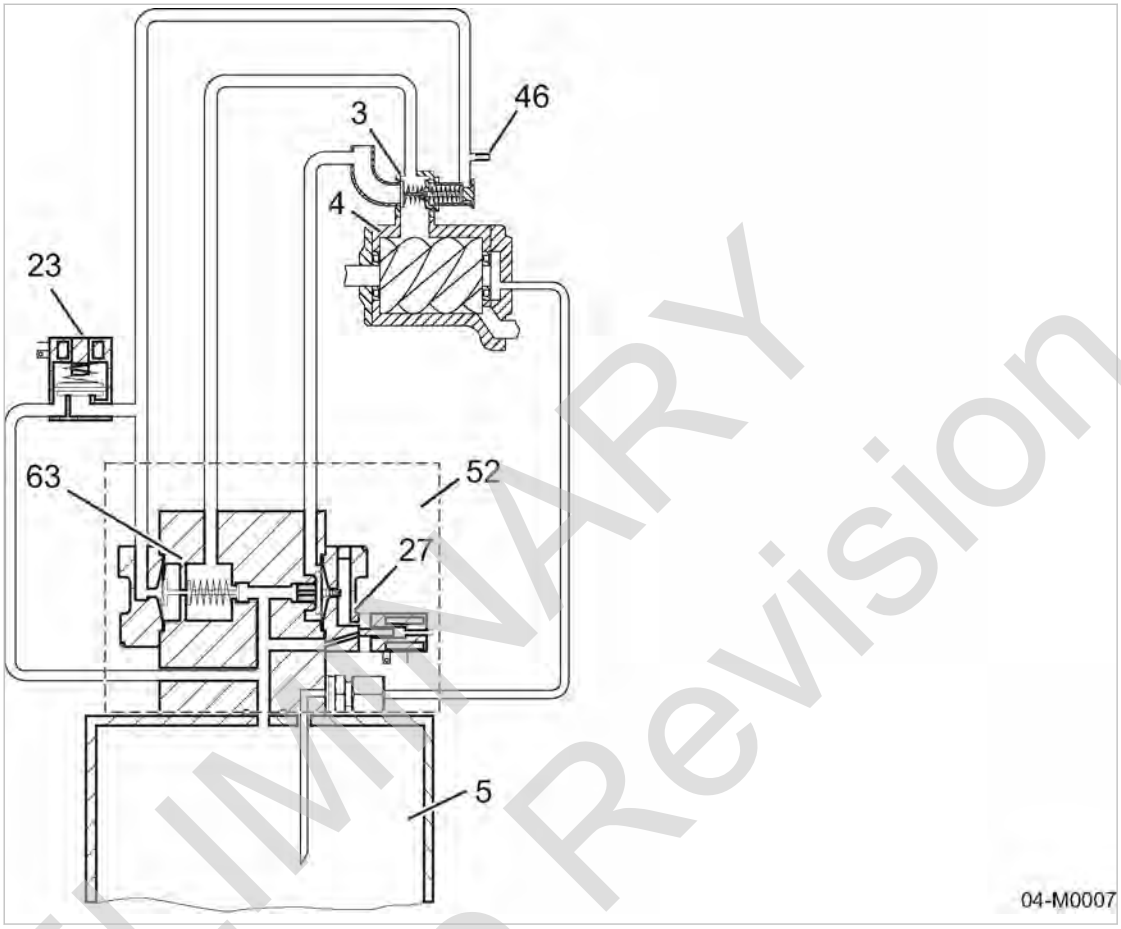

Fig. 11 Continuous regulation of FAD (standstill)

3	Inlet valve	27	Venting valve
4	Airend	46	Nozzle
5	Oil separator tank	52	Control valve
23	Proportional controller (electric)	63	Control valve (proportional valve)

4.5 Safety devices

4.5.1 Monitoring functions with shut-down

The SIGMA CONTROL MOBIL monitors the important machine parameters. The machine is automatically shut down if an alarm occurs.

The SIGMA CONTROL MOBIL saves the alarm message in the message memory.

Further information

Further information on alarm messages at the controller is provided in chapter 9.2.1.

4.5.2 Further safety devices

The following safety devices are provided and may not be modified in any way.

- «EMERGENCY STOP» push-button:
  The «EMERGENCY STOP» push button is for immediate shut-down of the machine. The motor/engine comes to a stop. The pressure system is vented.

PRELIMINARY
Subject to Revision

- Safety relief valves:
  Safety relief valves protect the system against unacceptable pressure rise. They are factory set.
- Enclosures and covers for moving parts and electrical connections:
  Protect against accidental contact.

4.6 SIGMA CONTROL MOBIL control panel

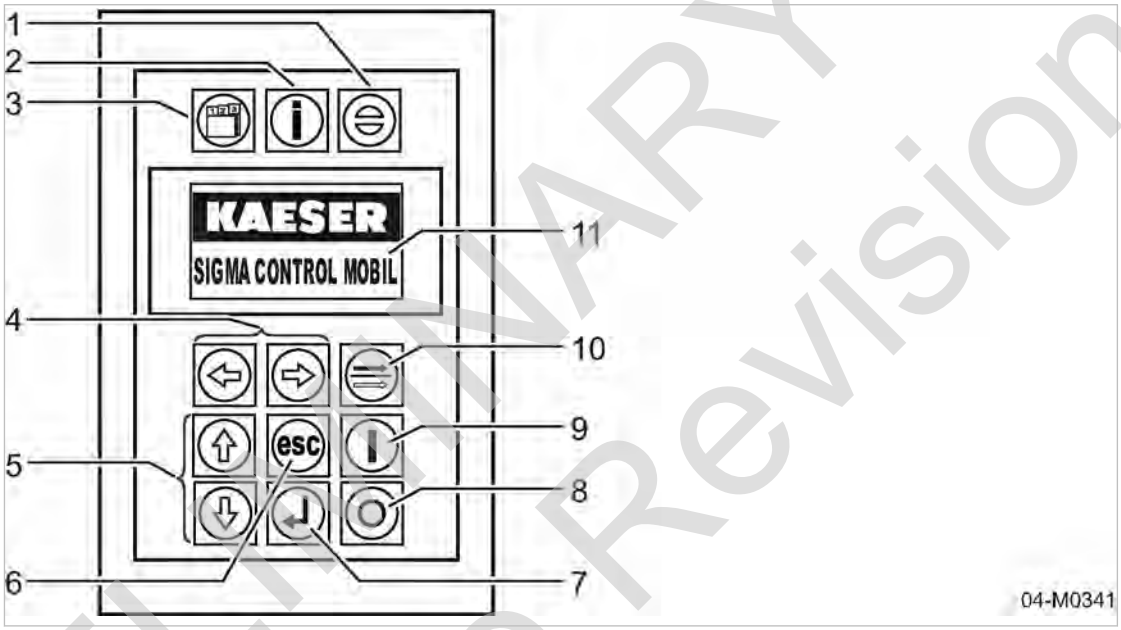

Fig. 12 SIGMA CONTROL MOBIL main display – overview

Location	Symbol	Description	Function	Background LED indicator
1		«Acknowledge» key	Acknowledge key. Confirms active and displayed messages (acknowledging).	Flashes when a message is active and waiting for acknowledgement.
2		«Information» key	Operating indicator: Display event memory.	Flashes if a message is active.
3		«Menu» key	Displays the main menu.	–
4		«Change value» keys: «Left» and «Right» keys	Changing a parameter value, jump to the left or right.	–

PRELIMINARY Subject to Revision

Location	Symbol	Description	Function	Background LED indicator
5		«Up» key and «Down» key	Scrolls upwards or downwards through the menu options.	–
6	esc	«Escape» key	Jumps back to next higher menu level. Exits the edit mode without saving.	–
7		«Enter» key	Jumps to the selected submenu option. Accepts an input.	–
8		«STOP» key	Stops the machine.	Continuous light when a fault has occurred.
9		«START» key	Starts the machine.	Flashes when ready to start. Continued light when engine is running.
10		«LOAD/IDLE» toggle key	Toggles the compressor between LOAD and IDLE operating modes.	Flashes when ready for switching to LOAD mode. Continuous light when the machine is running under LOAD.
11	–	Indicator field or display	Graphical display.	–

Tab. 55 Instrument panel keys and displays

Further information For more information about the controller's functionality, please see the separate SIGMA CONTROL MOBIL operating manual.

4.7 Variable pressure speed control

The machine is fitted with a variable pressure speed control.

The flow rate is flexible in accordance with the preselected pressure setting and adjustment of the engine speed. With it, the machine can be operated from a minimum pressure of 87 psi to the maximum working pressure.

Limiting is achieved by *<setting the maximum nominal pressure>* at the SIGMA CONTROL MOBIL controller.

Further information For more information about setting the *maximum nominal pressure*, see the separate operating manual of the SIGMA CONTROL MOBIL controller, Section "Set maximum nominal pressure".

PRELIMINARY Subject to Revision

4.8 Exhaust gas after-treatment

The exhaust from a diesel engine contains invisible particles that are dangerous to health.

State-of-the-art engine technologies are used to reduce the emission of pollutants and to meet the tighter exhaust standards.

For a proper balance, all parameters affecting combustion must be optimally adjusted to each other. In interaction with injection and turbo-charging in particular, the exhaust gas recirculation allows for combustions with significantly less nitrogen oxides.

Furthermore, all engines are fitted with various after-treatment facilities. The total of these measures contribute to the protection of human health and the environment.

4.8.1 Engine optimization

The engine series is equipped with a common rail diesel injection system and exhaust gas return. The engines are set to a maximum of efficiency and low particle emissions.

Electronic engine management

The engine system is equipped with an electronic engine management that communicates with the SIGMA CONTROL MOBIL system controller.

In addition to monitoring the engine and exhaust gas treatment, the engine control unit (ECU) also monitors itself. Any faults or malfunctions are stored as fault codes in the alarm memory and forwarded to the SIGMA CONTROL MOBIL controller.

Common rail injection system

The engine is fitted with a common rail injection system for mixture preparation. It is a high-pressure accumulator injection system for diesel engines. The common rail injection allows you to optimize the combustion process so that fewer contaminants are generated while consuming less fuel. The fuel is injected into the combustion chamber from a highly pressurized joint distributor pipe (common rail). The common rail injection system is controlled by a DEUTZ engine control unit.

Exhaust gas recirculation

Exhaust gas recirculation is a measure to reduce the emissions of nitrogen oxides. At high combustion temperatures, damaging nitrogen oxides (NO_x) increasingly develop in the engine. To reduce these levels, the combustion temperature must be lowered. The cooled and controlled exhaust gas recirculation circulates a portion of the exhaust gas back to the inlet side of the engine where it is added to the inlet air. This reduces the available oxygen volume and thus the combustion temperature. Both measures reduce the development of nitrogen oxides.

Exhaust gas recirculation occurs only in the partial load area of the engine because the engine runs particularly lean in this area. Exhaust gas recirculation is not practical in cold start, warm-up and full load.

Exhaust gas turbo-charging

The performance of the combustion engine can be enhanced by means of turbo-charging. A turbocharger compresses the air to allow more oxygen to flow into the combustion chamber. As a result, more fuel can be combusted and the engine performance increases accordingly. The turbocharger is driven by exhaust gas which makes turbo-charged engines very efficiently.

PRELIMINARY
Subject to Revision

4.8.2 Reduction of particle emissions

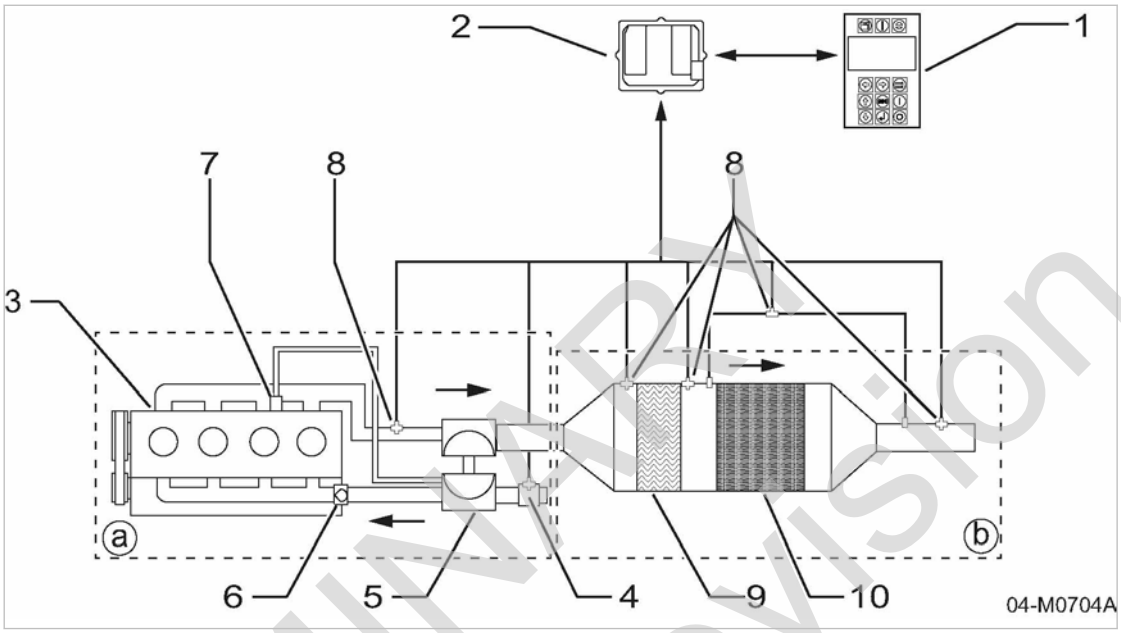

Fig. 13 Exhaust gas treatment – Reduction of particle emissions

1 SIGMA CONTROL MOBIL controller
2 Engine control unit (ECU)
a Common rail system
3 Engine
4 Air flow meter
5 Turbocharger
6 Inlet throttle
7 Exhaust gas return valve (EGR)
8 Sensors
b Exhaust gas treatment system: Reduction of particle emissions
9 Diesel oxidation catalytic converter (DOC)
10 Diesel particulate filter (DPF)

Diesel oxidation catalytic converter (DOC)

The diesel oxidation catalytic converter uses the fuel which has not been burnt during final injection for the active regeneration of the diesel particulate filter. The diesel oxidation catalytic converter serves a source of heat for the regeneration of the diesel particulate filter.

The diesel oxidation catalytic converter has a catalytic surface converting the pollutants in the exhaust gas into harmless substances. Carbon monoxides and non-burned hydrocarbons are forced to react with oxygen and converted to carbon dioxide and water. In addition, the nitrogen monoxides are converted to nitrogen oxides. To achieve a high efficiency, temperatures must be higher than 482 °F.

Diesel particulate filter (DPF)

The diesel particulate filter is used for reducing the particulate present in the diesel engine exhaust (fine solids and mostly soot). Nearly all of these particulates are trapped in the filter and burnt to carbon dioxide at high exhaust gas temperature.

At a low exhaust gas temperature when the particulate does not burn spontaneously, a pressure difference occurs between inlet and outlet of the diesel particulate filter. This initiates a regeneration of the filter,

during which the soot is removed. Regeneration is activated when the filter medium is saturated with soot to a certain degree.

PRELIMINARY Subject to Revision

4.8.3 Diesel particulate filter regeneration

The removal of soot from the diesel particulate filter is called regeneration.

As a rule, the engine control unit automatically starts the regeneration. Regeneration must be manually initiated (standstill regeneration) only in exceptional cases (adverse application conditions).

Function

The exhaust gas treatment system of the DEUTZ diesel engine is a passive particulate filter system. A passive particulate filter system burns the soot in the filter with the nitrogen dioxides contained in the exhaust after they have been converted in the DOC. This process is continuous as soon as the exhaust gas temperature exceeds 662 °F. The passive particulate filter system does not contain a burner. Prerequisite for passive continuous regeneration is a sufficient ratio of nitrogen oxides and soot in the engine's exhaust gas.

CRT operation

The CRT (Continuous Regeneration Trap) system is based on a continuous regeneration process which is activated when a required exhaust gas temperature is reached at the system inlet. The system constantly monitors the filter load.

Definition of nominal filter load

The engine control unit internally monitors the soot level in the diesel particulate filter. The current soot load is displayed in percentage at SIGMA CONTROL MOBIL.
When the soot load in the DPF has reached 100%, the system prompts a *standstill regeneration*.

Standard operation (passive regeneration)

Under normal operational conditions (exhaust gas temperature > 662 °F), the exhaust gas treatment system operates without operator intervention. The soot particulate is continuously burnt without intervention by the engine control unit. This occurs mostly at high engine load. A reaction with nitrogen dioxide converts the soot particulate to carbon dioxide. The soot load of the DPF remains in a permissible range.

Support mode (active regeneration)

If the engine operating conditions do not allow passive regeneration, the soot load in the DPF will rise. This can be the case at extremely low utilization or very short working times.

Since no more soot particulates can be removed, soot accumulates in the filter. When the relative soot load of the particulate filter exceeds a limit of approximately 80%, active regeneration is initiated by the engine control unit. The engine is operated in a special *Heat mode* and changes its mode (exhaust gas temperature is increased) to improve the regeneration conditions. The soot particulates are burnt to carbon dioxide with an exhaust gas temperature of 1112 – 1202 °F.

This is an automated process that does not require operator intervention. The activation of the *Heat mode* is not indicated by either illuminated push-buttons or the *SIGMA CONTROL MOBIL* display.

Heat mode automatically terminates when the soot load of the particulate filter drops below 72%.

PRELIMINARY
Subject to Revision

Standstill regeneration (activated by operator)

If the *Heat mode* support mode does not result in a sufficient reduction of the soot load, the particulate filter will further accept soot until a standstill regeneration (particulate filter system load > 100%) becomes necessary. This standstill regeneration is the ultimate option for filter regeneration because all prior attempts to regenerate the filter have failed.

A specific engine operating state is assumed during standstill regeneration and it is not possible to generate compressed air for its entire duration.

When an engine prompts a standstill regeneration, it displays the *Standstill regeneration required* warning message

The operator must then initiate the standstill regeneration. This results in the compressor being unloaded and the engine can start standstill regeneration. The process requires approximately 30 minutes and, during this time, the engine can autonomously adjust its speed to arrive at the optimal operating point for the standstill regeneration.

Because the regeneration will start only at temperatures above 662 °F, it is recommended to warm up the engine in LOAD mode before initiating standstill regeneration.

PROBLEM:
Low ambient temperatures may cause the standstill regeneration not to start.

The following conditions must be fulfilled for the standstill regeneration to start:

- Minimum temperatures:
  - Reduction agent tank ≥ 44.6° F
  - Reduction agent pump module ≥ 44.6° F
  - Coolant temperature ≥ 140° F
- Pump pressure for the reduction agent pump ≥ 9° psi
- Exhaust gas temperature upstream of SCR catalytic converter max. 572° F

Once the standstill regeneration has been prompted it may sometimes no longer be possible to switch the machine to the LOAD mode. The motor is then already in performance reduction mode and only runs in IDLE.

➢ Warm-up machine by letting it run in IDLE mode.

This may take a long time.
(For example 30 minutes at ambient temperatures of 14° F).

The engine will internally calculate the cancellations of standstill regeneration. After three cancellations, the engine will move into emergency run and a service regeneration must be carried out by the DEUTZ service personnel!

The same applies when the prompt for standstill regeneration is ignored resulting in an impermissible overload of the particulate filter.

4.8.4 Reduction of nitrogen oxide emissions

In order to comply with TIER 4 FINAL emissions level, the engine is additionally equipped with an SCR system for the reduction of nitrogen oxide (NOx).

PRELIMINARY
Subject to Revision

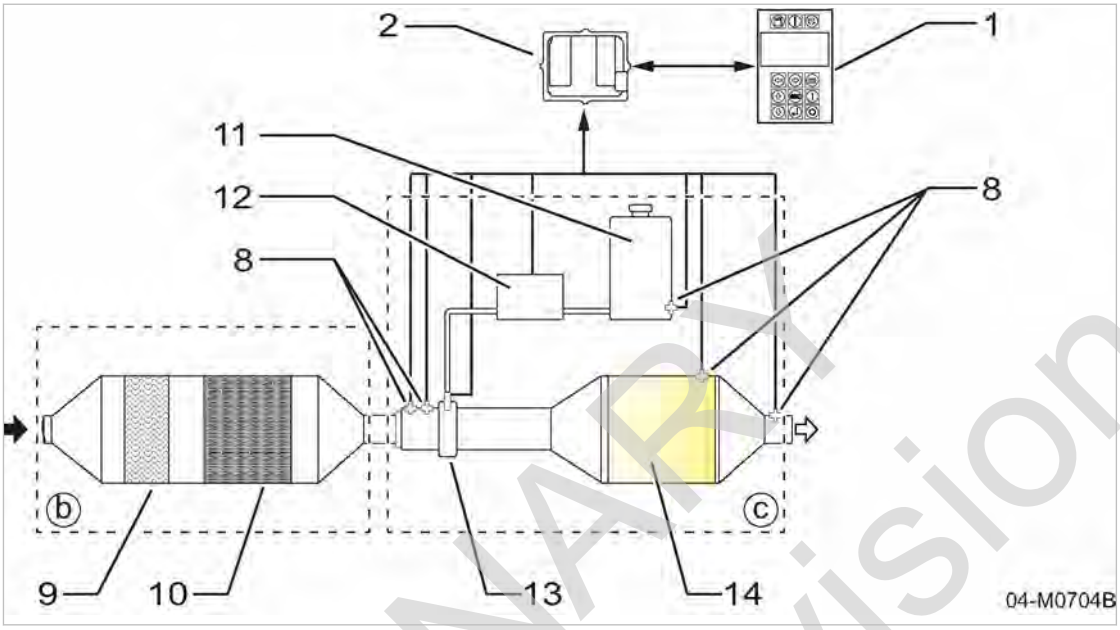

Fig. 14 Exhaust gas treatment – Reduction of nitrogen oxide emissions

1	SIGMA CONTROL MOBIL controller	8	Sensors
2	Engine control unit (ECU)	11	Reduction agent tank
b	Exhaust gas treatment system: Reduction of particle emissions	12	Reduction agent pump
9	Diesel oxidation catalytic converter (DOC)	13	Dosing module
10	Diesel particulate filter (DPF)	14	SCR catalytic converter
c	Exhaust gas treatment system: Nitrogen oxide emissions reduction		

Principle

The nitrogen oxide emissions that are emitted by the engine are reduced with the SCR system. A reduction agent (AdBlue®) that is injected into the exhaust system in a controlled manner, releases ammonia in the exhaust system and reacts in the SCR catalytic converter with the nitrogen oxides (NOx) that are contained in the exhaust gas. During this process, they are converted to nitrogen and water. The injection quantity of the reduction agent is controlled by means of the machine electronics.

- The engine is optimized in such a manner that very few soot particles are created but a purposely large quantity of nitrogen oxides.
- The reduction agent is then injected into the exhaust flow.
- Due to the high exhaust temperature, the reduction agent is converted into ammonia and carbon dioxide.
- Thanks to the ammonia, the nitrogen oxides on the catalytic converter's surface react to nitrogen and water which are natural components of our atmosphere.

PRELIMINARY
Subject to Revision

SCR system

A heater is located in the reduction agent tank which melts sufficient liquid any time when there is severe frost (DEF (Diesel Exhaust Fluid) freezes at –11.3 °F), in order to quickly activate the system. Heatable pipes lead the DEF from the tank to a dosing module controlled by the engine control unit. This module ensures that always the correct quantity of reduction agent required for the speed and engine load is injected. The exhaust gas system behind the dosing module is designed in a manner that DEF, or the released ammonia is optimally distributed via the actual catalytic converter. Sensors in front and behind the SCR catalytic converter measure, for example, the nitrogen oxide concentration and temperature and send signals to the engine control unit. This process ensures even more precise dosing and monitors the correct functioning of the SCR system at the same time.

Reduction agent

As operating fluid the synthetically produced watery urea solution AUS 32 is used as reduction agent. Alternatively, the reduction agent is also known by the trade name AdBlue®, which is also known as "Urea" or, in North America, as "DEF" (Diesel Exhaust Fluid).

AdBlue® consists of 32.5% of urea and 67.5% of pure water. In this mixture ratio, the urea concentration always remains steady. The high purity and quality is guaranteed by the standard EN 70070/ISO 22241. DEF is neither a hazardous material as defined by the Chemicals Control Law nor a hazardous good as defined by the Dangerous Goods Regulation. It must not be mixed with any additives or diluted with water, or contaminated with other substances.

DEF – a non-toxic and odor-free urea solution – is easily filled at the petrol pump and carried in a separate container.

Further information

Instructions regarding the safe handling of the DEF reduction agent are provided in chapter 3.5.2.

Monitoring the addition of the reduction agent

Well-functioning exhaust air treatment is necessary in order to meet the stricter emission limits. For this reason, the SRC system is monitored by various sensors, including the filling level of the reduction agent tank.

Once the filling level in this tank reaches a certain minimum level, the engine control switches the engine to "torque reduction". The SIGMA CONTROL MOBIL displays the warning message "Torque reduction active" (message code 3182).

In "torque reduction" mode, the engine reduces its output to force the operator to replenish the reduction agent and/or to have the exhaust system inspected.

This means that the engine runs in IDLE speed and no longer generates compressed air. The machine is no longer operational.

The engine will operate with normal speeds only after the reduction agent has been replenished.

4.9 Options

The options available for your machine are described below.

4.9.1 Option da, df, dc, dd Air treatment options

For some applications, the compressed air generated by this machine must be treated before use.

The following describes the possible air treatment options that may be fitted to the machine.

PRELIMINARY Subject to Revision

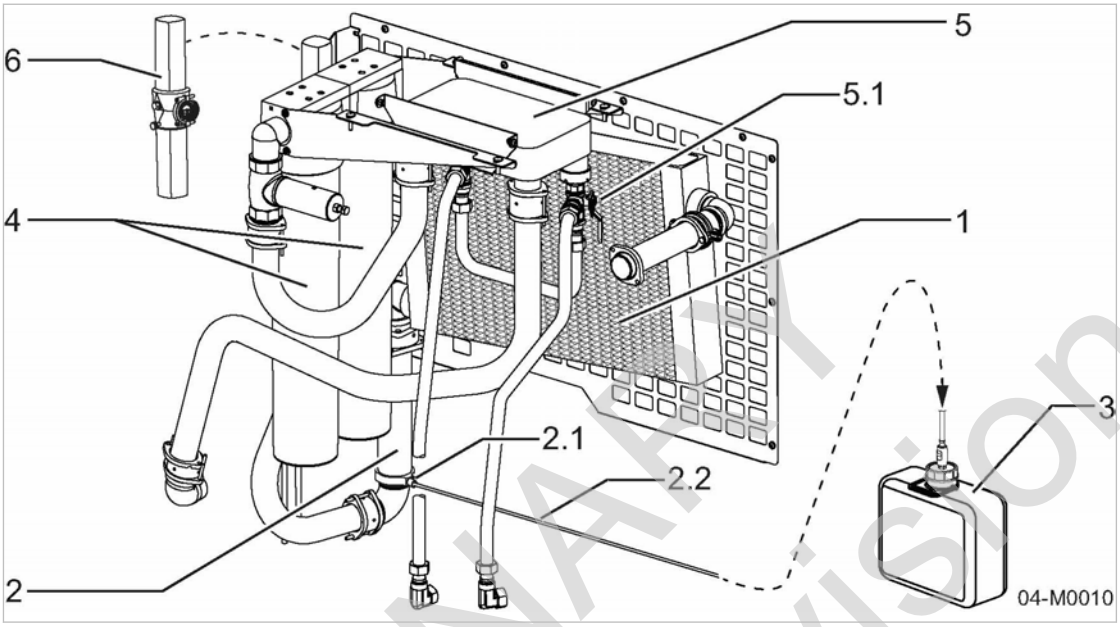

Fig. 15 Compressed air options

1 Compressed air after-cooler (Option da)
2 Centrifugal separator (Option da)
2.1 Dirt trap (option da)
2.2 Condensate drain pipe (Option da)
3 Condensate collector (Option da)
4 Filter combination (Option dd)
5 Heat exchanger (Option db)
5.1 Bypass for heat exchanger (Option df)
6 Fresh air filter (Option dc)

4.9.1.1 Option da
Compressed air after-cooler

The compressed air after-cooler lowers the compressed air temperature to only 5 K to 10 K above the ambient temperature. The exchange of heat lowers the compressed air temperature and the water contained in the compressed air, as well as the oil mist precipitates to condensate. Most of the moisture carried in the air is removed in the after-cooler. This condensate, mixed with oil particles, has to be drained by a separator.

4.9.1.2 Option da
Centrifugal separator

A centrifugal separator is used to isolate the condensate from the compressed air. The centrifugal separator sets the compressed air that still contains moisture into a circular movement (turbulence). The heavy dirt particles and water droplets combined in the condensate are thrown to the outside and run down against the wall of the separator. The accumulating condensate collects at the bottom of the centrifugal separator.

4.9.1.3 Option da
Dirt trap with condensate drain pipe

A dirt trap is located at the bottom end of the centrifugal separator. Whilst the condensate flows through the dirt trap, existing dirt particles are retained.

Subsequently, the condensate flows through the connected condensate drain pipe:

- when the engine is cold to the condensate collector to be collected in there

PRELIMINARY
Subject to Revision

- when the engine is warm to the exhaust gas pipe where it evaporates
- switching is carried out by solenoid valves which are controlled by the SIGMA CONTROL MOBIL controller.

4.9.1.4 Option da
Condensate collector

The condensate generated during air treatment is fed into a condensate collector. The condensate collector is positioned in a special bracket inside the machine and can be pulled out by using a hand grip.

4.9.1.5 Option df
Heat exchanger

The oil/compressed air heat exchanger is fed with hot compressor cooling oil that warms the outgoing cooled moisture-reduced compressed air.

This warm, dry compressed air is ideal for sand blasting, for example.

Option df Compressed air quality with/without heat exchanger:

If heating is not required, you can use the bypass to bridge the heat exchanger.

Option designation	Heat exchanger	Compressed air quality
da + df	activated	heated and dry
	bridged	cool and condensate-free
da + dd + df	activated	heated and technically oil-free
	bridged	cool and technically oil-free

Tab. 56 Compressed air quality with/without heat exchanger

4.9.1.6 Option dd
Filter combination

To obtain oil-free compressed air, the dried compressed air passes through a pre-filter and micro-filter combination and emerges oil-free and free from solid particles.

4.9.1.7 Option dc
Fresh air filter

Compressed air from oil-injected compressors may not be used directly as breathing air.

The concentration of contaminants will increase during the compression of the intake ambient air, and cooling oil and abraded particles can enter the compressed air. Subsequent treatment of the pre-filtered compressed air is required.

Pre-treated compressed air must be filtered to remove all contaminants (e.g. fine dust and oil) as well as odours, before it can be used for additional breathing purposes (fresh air supply).
To achieve this, part of the compressed air output from the compressor is passed through a combination of micro-/activated carbon filters.

The connection to air treated in this way is specially marked. It is designed as a quick-release coupling next to the outlet valves on the compressed air distributor on the bottom of the machine body.

PRELIMINARY
Subject to Revision

⚠ DANGER

Danger from toxic air!
Danger of respiratory arrest because the filter does not remove CO/CO_2, methane or other toxic gases or vapours.

- ➤ *Never use the machine in enclosed spaces, only in the open.*
- ➤ *Clean inlet air without hazardous contaminants. Engine exhaust fumes must not be drawn into the compressor.*

The treated air does not meet the local standards for 'Compressed air for breathing apparatus'. Therefore, it must not be used as pure breathing air, but may be used to reinforce the flow of fresh air when working in dusty or dirty conditions such as sand blasting.

Further information — See Chapter 2.8.1.1 for ambient conditions under which the fresh air filter can be used.

Further information — See DIN EN 12021 for more information regarding permissible limit values for hazardous contaminants in breathing air.

4.9.2 Option bb; od Auxiliary electrical systems

The following auxiliary electrical equipment is provided in the machine:

- Coolant pre-heating for diesel engine
- Battery charger for automatic start/stop

The auxiliary electrical equipment is pre-wired for operation. A separate mains power connection provides power.

A flexible power cable (supplied) connects the machine's power plug to the user's power socket.

Option bb — **Coolant pre-heating for diesel engine:**

The engine's coolant should be pre-heated in order to protect the engine at low temperatures. A coolant pre-heating system is installed for this purpose. The coolant pre-heating works according to the principle of self-circulation.

Option od — **Battery charger for automatic start/stop:**

The automatic start/stop option can be set in the SIGMA CONTROL MOBIL controller for automatic machine start. The engine's starting battery must be sufficiently charged at any time, in order for the drive engine to be started even after longer standstill times. Use a battery charger.

4.9.3 Option ba Low temperature equipment options

Special equipment is provided for operation in extremely low temperatures.

This equipment assures trouble-free operation in ambient temperatures from -13 °F to 122 °F.
The electrical system starts the engine without problem at ambient temperatures down to –4° F.

Option bb — **Coolant pre-heating:**

The engine coolant can be pre-heated to improve starting under cold conditions.

PRELIMINARY Subject to Revision

4.9.4 Option lb
Options for operating in fire hazard areas

Diesel engines represent a potential source of ignition in environments with concentrations of gas, vapor or dust, and may cause major fires with disastrous consequences for people, the environment and production.

For the operation in fire hazard areas, the machine is equipped with an engine air shut-off valve.

4.9.4.1 Option lb
Engine air shut-off valve

If flammable gases and vapors are drawn by the diesel engine from the environment into the air intake, they will act like additional fuel. This causes a sudden and uncontrolled increase in engine speed that can result in serious mechanical damage. Without appropriate preventive measures, the engine and the engine-driven devices can be destroyed. Explosion or fire are also possible.

When flammable gas is drawn into the engine, shutting off the fuel supply will no longer stop the engine. In order to shut down the engine quickly and reliably in these events, the intake of the combustion air must be interrupted.

If a certain engine speed is exceeded, the engine air throttle valve will close automatically. The feed of intake air is interrupted and causes the engine to immediately stand still.

4.9.5 Option ob, od
Start/stop/automatic options

Option ob Automatic engine start/stop

The automatic start/stop option can be set in the SIGMA CONTROL MOBIL controller for automatic machine start.

Option od Trickle charging of starter batteries

The engine's starting batteries must be sufficiently charged at any time, in order for the drive engine to be started even after longer standstill times. Use a battery charger. This battery charger is connected to the user's electrical system.

4.9.5.1 Option ob
Automatic start/stop, external connections

The machine is equipped with two external connections (sockets) to allow the customer to connect the SIGMA CONTROL MOBIL controller. This enables the controller to connect to master control systems.

Connection X51:

- Remote On/Off contact:
  - Make contact to be provided by the customer

PRELIMINARY
Subject to Revision

Connection X50:

- Release contact to be provided by the customer
- Message contacts:
  - Group alarm
  - Group warning
  - Group maintenance
  - Fuel level
  - *Motor running* message
  - *LOAD operation* message

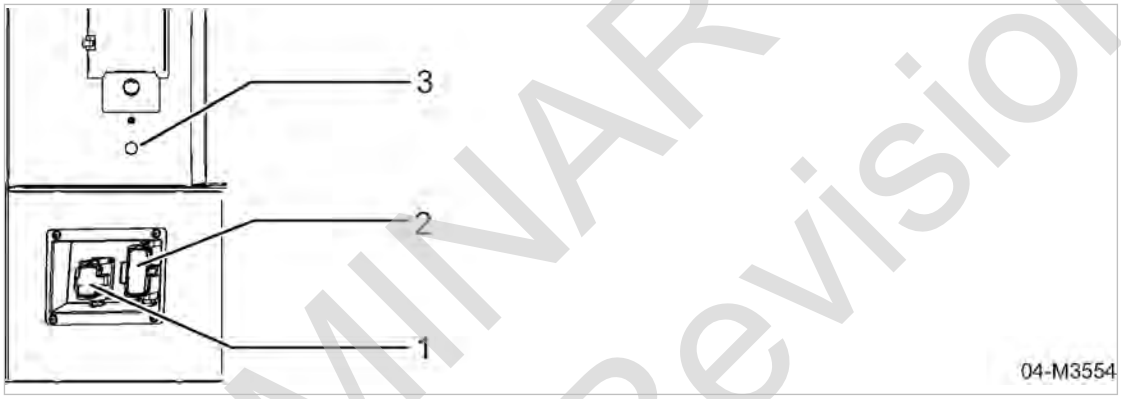

Fig. 16 Automatic start/stop, external connections

1 Socket 1 (X51)
2 Socket 2 (X50)
3 Device connection for auxiliary electrical systems, such as battery charger for automatic start/stop

The connector plug for both socket is included with the machine. A certified electrician must connect them to the connecting cables of the controller technology provided by the customer.

4.9.6 Option oc GSM/GPS unit

The machine is equipped with a GSM/GPS unit. This is equipped with a SIM card and provides fleet management capability for the customer.

The GSM/GPS unit comprises:

- GSM modem
- GPS receiver

Please observe all information from the manufacturer regarding functionality, operation and service!

Further information Dealer/manufacturer and GSM/GPS unit model information can be found in chapter 2.8.4.

4.9.7 Transport options

See the separate document "Chassis Operating Manual" for information on the design of the individual chassis.

PRELIMINARY Subject to Revision

4.9.8 Frame design options for stationary machines

4.9.8.1 Option rw; rx
Frame types of stationary machines

Option	Designation	Characteristics
rw	Skid	■ Frame designed as skid ■ Use as stationary machine ■ Mounted on truck/trailer platform
rx	Frame	■ The mounting assembly is designed as a frame. ■ Use as stationary machine ■ Mounted on truck/trailer platform

Tab. 57 Stationary machines

Further information See chapter 13.3 for the dimensional drawings of machines with stationary frame designs.

4.9.9 Option oe
Closed floor pan option

The machine is fitted with a sealed floor pan which catches operating liquids in the event of leaks. Thus, direct contamination of the floor is prevented.

The closed floor pan:

- Cannot catch all liquids contained in the machine, but is intended only to capture small leaks in the vicinity of endangered components.
- Is equipped with service openings which are sealed with sheet metal covers or closed with bungs.

Prior to the installation, these components must be properly sealed or tightly closed.

Further information The location of the service openings are provided in chapter 4.2, Figure 9.

Compressor cooling oil and engine coolant drain lines are led to a central point outside the machine with stationary frame structure (see the following figure).

PRELIMINARY
Subject to Revision

Option rw; rx **Position of service openings with stationary frame structure:**

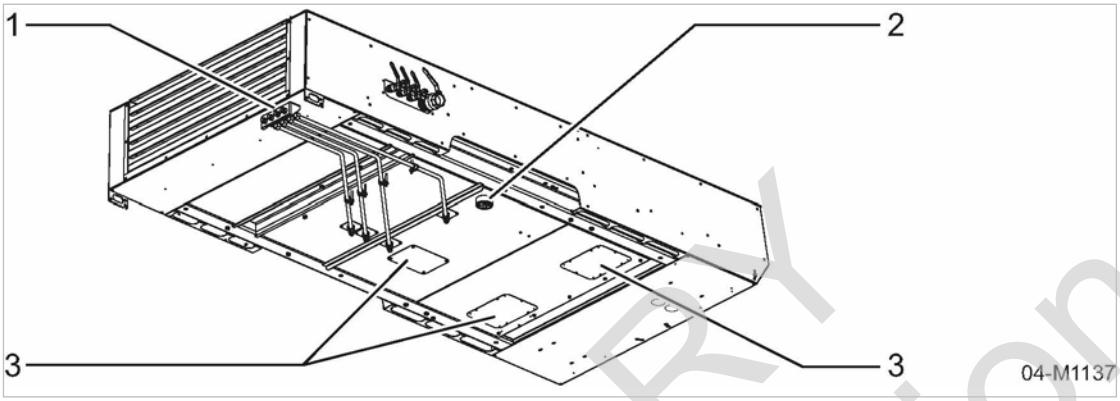

Fig. 17 Position of service openings with stationary frame structure

1. Central drain point for oil/coolant
2. Fuel tank service opening, closed with bung
3. Cleaning opening, closed with sheet metal cover

Position of drains for oil and coolant from engine and compressor:

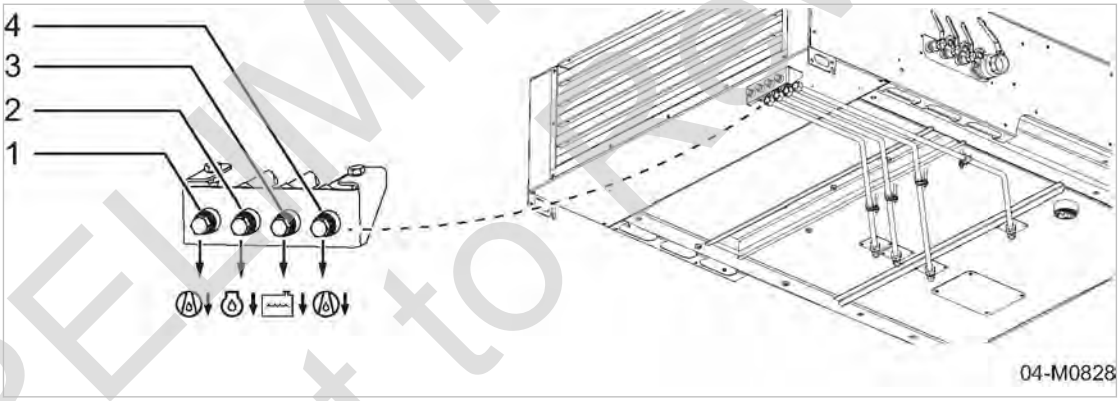

Fig. 18 Drain points for oil and coolant from engine and compressor

1. Coolant oil drain - oil separator tank - compressor
2. Engine oil drain
3. Coolant drain - coolant cooler - engine
4. Coolant drain - oil cooler - compressor

4.9.10 Option sg Pedestrian protection option

The machine is fitted with a special protective guard that prevents pedestrians from being run over.

PRELIMINARY Subject to Revision

5 Installation and Operating Conditions

5.1 Ensuring safety

The conditions in which the machine is installed and operated effect the safety of personnel and surroundings.

Warning instructions are located before a potentially dangerous task.

⚠ Disregard of warning instructions can cause serious injuries!

Complying with safety warnings

Disregard of safety warnings can cause unforeseeable dangers!

- ➤ Strictly forbid fire, open flame and smoking.
- ➤ If welding is carried out on or near the machine, take adequate measures to prevent sparks or heat from igniting fuel or oil vapors or parts of the machine.
- ➤ Do not store any flammable materials in the vicinity of the machine.
- ➤ The machine is not explosion-proof!
  Do not operate in areas in which specific requirements with regard to explosion protection are applied.
- ➤ Keep suitable fire extinguishing agents on hand and ready for use.
- ➤ Ensure that required ambient conditions are maintained.

Required ambient conditions may be:

- A specific ambient temperature range
- Air composition at the installation site:
  - clean with no damaging contaminants (e.g., dust, fibers, fine sand)
  - free of explosive or chemically-unstable gases or vapors
  - free of acid/alkaline forming substances, particularly ammonia, chlorine or hydrogen sulfide.

5.2 Installation conditions

Precondition The floor must be level, firm and capable of bearing the weight of the machine.

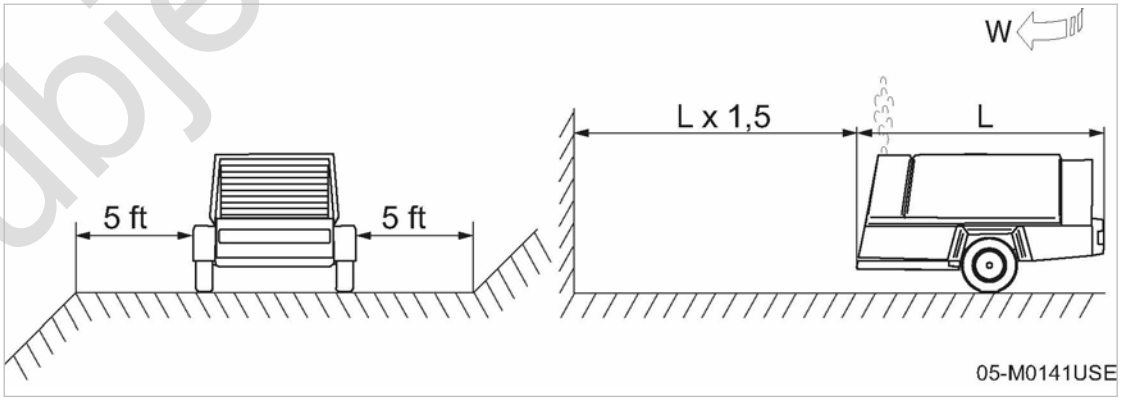

Fig. 19 Minimum distance from excavations/slopes and walls

[W] Wind direction

PRELIMINARY Subject to Revision

1. Keep sufficient distance (at least 5 ft) from the edges of excavations and slopes.
2. Ensure that the machine is as level as possible.

The machine can be temporarily operated on a slope of not more than 15°.

Option oe:
Except for machines with sealed floor pans - these should always be installed on as horizontal a surface as possible!

3. Ensure accessibility so that all work on the machine can be carried out without danger or hindrance. The operator panel with the «EMERGENCY STOP» push button must be accessible and within reach at any time.
4. **NOTICE** *Fire hazard from build-up of heat and hot exhaust system!*
   Insufficient clearance above the machine may well cause heat build-up that could damage the machine.
   - ➤ *Do not position the machine directly under a low roof or covering.*
   - ➤ *Always insure sufficient ventilation space around the machine.*
5. Ensure there is enough free space all round and above the machine.
6. Keep air inlet and outlet openings free of obstructions so that the cooling air can flow freely through the machine.
7. Install the machine ensuring that
   - Exhaust gases and heated exhaust air can escape freely.
   - Do not allow exhaust gases and heated cooling air to be drawn into the compressor. Note the wind direction! (see figure 19)
   - Ensure the unimpeded intake of fresh air (air intake, cooling air).
8. **NOTICE** *Ambient temperature too low.*
   Frozen condensate and highly viscous engine or compressor cooling oil can cause damage when starting the machine.
   - ➤ *Use winter grade engine oil.*
   - ➤ *Use winter diesel fuel.*
   - ➤ *Use low viscosity compressor cooling oil.*
9. At ambient temperatures below 32 °F, follow the instructions in chapter 7.4.

5.3 Option rx Machine with stationary frame structure

Stationary machines mounted on a frame may be installed on the load platforms of trucks.

For safe footing, the machine must be fixed to the load platform via bolt-down anti-vibration mounts (bonded rubber/metal elements) for safe footing.

Prerequisites for the installation on truck platforms:

1. Follow the vehicle manufacturer's loading guidelines for safe operation and transportation.
2. Ensure there is enough free space around and above the machine.
3. Ensure accessibility so that all work on the machine can be carried out without danger or hindrance. The operator panel with the «QUICK STOP» push-button must be accessible and within reach at any time.
4. Keep air inlet and outlet openings free of obstructions so that the cooling air can flow freely through the machine.

PRELIMINARY Subject to Revision

6 Installation

6.1 Ensuring safety

Follow the instructions below for safe installation.

Warning instructions are located before a potentially dangerous task.

⚠ Disregard of warning instructions can cause serious injuries!

Complying with safety warnings

Disregard of safety warnings can cause unforeseeable dangers!

- ➤ Follow the instructions in chapter 3 “Safety and Responsibility”.
- ➤ Installation work may only be carried out by authorized personnel.
- ➤ Replace self-locking nuts that have been removed, do not reuse old ones. The nut is no longer self-locking once it has been unscrewed.

Further information: Details of authorized personnel are found in chapter 3.4.2.
Details of dangers and their avoidance are found in chapter 3.5.

6.2 Reporting Transport Damage

1. Check the machine for visible and hidden transport damage.
2. Inform the carrier and the manufacturer in writing of any damage found.

6.3 Perform regular maintenance on the chassis

- ➤ See the separate document "Chassis Operating Manual" for instructions regarding maintenance on the chassis.

6.4 Option rx Installing a machine with stationary frame superstructure on a truck platform

For safe footing, attach the machine frame with screw-in machine mounts on the load platform. See the dimensional drawing in chapter 13.3 for position and dimensions of the machine mounts.

These machine mounts are either supplied with the machine or can be ordered separately from KAESER.

Material: Bolt-down machine feet (anti-vibration elements)
Fixing screws
Wrench

Precondition: The machine is switched off.

PRELIMINARY Subject to Revision

Installing the machine mounts on the frame:

➤ Fasten the machine mounts (anti-vibration elements) at the frame:

Fasten the machine on the load platform:

Precondition The bolt-down machine mounts are attached to the machine.

1. Position the machine on the loading platform according to chapter 5.3, Installation conditions.
2. Use suitable screws to fasten the machine with the bolt-down machine feet to the loading platform.

6.5 Option ob Connect automatic start/stop externally

In order to operate the controller of the machine with the “automatic start/stop” option, you must connect the machine to the controller system provided by the customer.

Precondition Controller is switched off

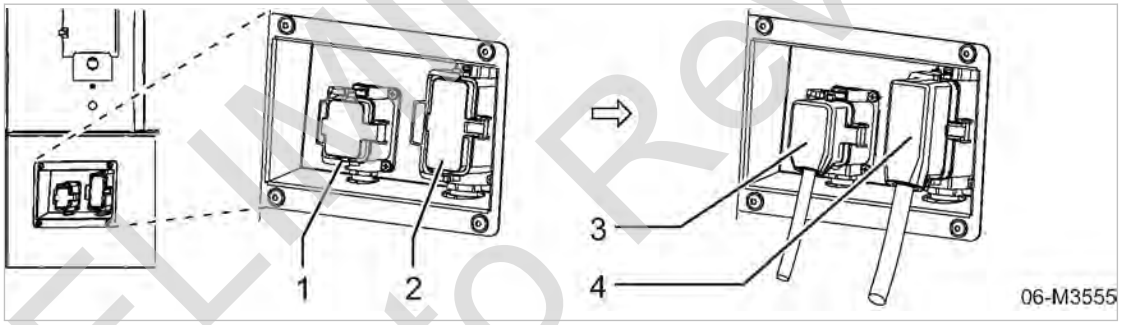

Fig. 20 Connect automatic start/stop externally

1 Socket 1 (cover closed)
2 Socket 2 (cover closed)
3 «Remote ON/OFF» connector connected
4 «Messages» connector connected

1. Establish plug connection [X51]:
   - ➤ Open cover of socket 1.
   - ➤ Connect the corresponding connector of the connecting cable.
   - ➤ Secure the plug connection with the locking clamp.
   - Remote ON/OFF contact has been connected.
2. Establish plug connection [X50]:
   - ➤ Open cover of socket 2.
   - ➤ Connect the corresponding connector of the connecting cable.
   - ➤ Secure the plug connection with the locking clamp.
   - Release and message contacts have been connected.

Result The SIGMA CONTROL MOBIL controller of the machine has been connected to the controller system provided by the customer and is ready for start in automatic mode.

PRELIMINARY Subject to Revision

7 Initial Start-up

7.1 Ensuring safety

Follow the instructions below for safe commissioning of the machine.
Warning instructions are located before a potentially dangerous task.

Disregard of warning instructions can cause serious injuries!

Complying with safety warnings

Disregard of safety warnings can cause unforeseeable dangers!

- ➤ Follow the instructions in chapter 3 “Safety and Responsibility”.
- ➤ Commissioning work may only be carried out by authorized personnel!
- ➤ Make sure that no one is working on the machine.
- ➤ Ensure that all service doors and panels are locked.

Further information

Details of authorized personnel are found in chapter 3.4.2.
Details of dangers and their avoidance are found in chapter 3.5.

7.2 Before initial start-up (or recommissioning)

Incorrect or improper commissioning can cause injury to persons and damage to the machine.

7.2.1 Instructions to be observed before commissioning or recommissioning

The initial start-up of every machine takes place at the factory. Every machine is also given a trial run and passes a careful check.

- ➤ Commissioning may only be carried out by authorized installation and service personnel who have been trained on this machine.
- ➤ Remove all packing materials on and in the machine.
- ➤ Observe the machine during the first few hours of operation to ensure that it is operating correctly.

PRELIMINARY
Subject to Revision

7.2.2 Special measures for recommissioning after storage

➤ Carry out the following before every start-up after long period of storage:

Storage period longer than:	Remedy
5 months	➤ Remove the desiccant from the openings in the air intake filters of the engine and compressor. ➤ Check the air and oil filters. ➤ Drain the preserving oil from the separator tank. ➤ Fill with cooling oil. ➤ Drain the preserving oil from the engine. ➤ Fill with engine oil. ➤ Check the engine coolant ➤ Check the battery charge. ➤ Re-connect the battery (batteries). ➤ Check all fuel lines, engine oil lines and compressor cooling oil lines for leaks, loose connections, wear and damage. ➤ Clean the bodywork with a grease and dirt dissolving agent. ➤ Check the tire pressures.
36 months	➤ Have the overall technical condition checked by an authorized KAESER service representative.

Tab. 58 Measures for recommissioning the compressor after a long period of storage

7.3 Checking installation and operating conditions

➤ Check and confirm all the items in the check list before first start-up of the machine.

To be checked	See chapter	Confirmed?
➤ Are the operators fully conversant with the applicable safety regulations?	–	
➤ Have all the installation conditions been fulfilled?	5	
➤ Is there sufficient cooling oil in the separator tank?	10.5.1	
➤ Is there sufficient oil in the engine?	10.4.4	
➤ Is the maintenance indicator on the air intake filters (engine and compressor) OK?	10.4.2, 10.5.7	
➤ Is there sufficient coolant in the coolant expansion tank?	10.4.1	
➤ Is there sufficient fuel in the fuel tank?	–	
➤ Is there sufficient reducing agent (emission treatment) in the reduction agent tank?	–	
➤ Are all access doors closed and all body panels in place?	–	
➤ Are the tire pressures OK?	–	

Tab. 59 Installation conditions checklist

PRELIMINARY Subject to Revision

7.4 Low-temperature operation (winter)

The machine's electric system is designed for starting at ambient temperatures as low as 14 °F.

➤ In temperatures below 32 °F, use the following operating materials/components:

- Winter grade engine oil
- Low viscosity cooling oil for the compressor
- Winter grade diesel fuel
- Stronger batteries

Use compressed air hoses that are as short as possible under extremely cold conditions.

7.4.1 Jump starting the machine

If the machine's starter batteries are discharged, the machine can be jump-started with the batteries of another vehicle or engine-driven machine.

Material: Jumper cables

Precondition: The machine is disconnected from the towing vehicle and safely parked.

⚠ WARNING

Fire and explosion hazard.
Short-circuit currents caused by short-circuited battery. A shorted battery can catch fire or explode.
Battery casing may crack and allow acidic fluid to spray out.

➤ *Observe the instructions provided with the battery jumper cables.*

➤ *Do not connect the battery jumper cables to the negative pole of the discharged battery or to the bodywork of the machine.*

➤ *Work with caution.*

PRELIMINARY Subject to Revision

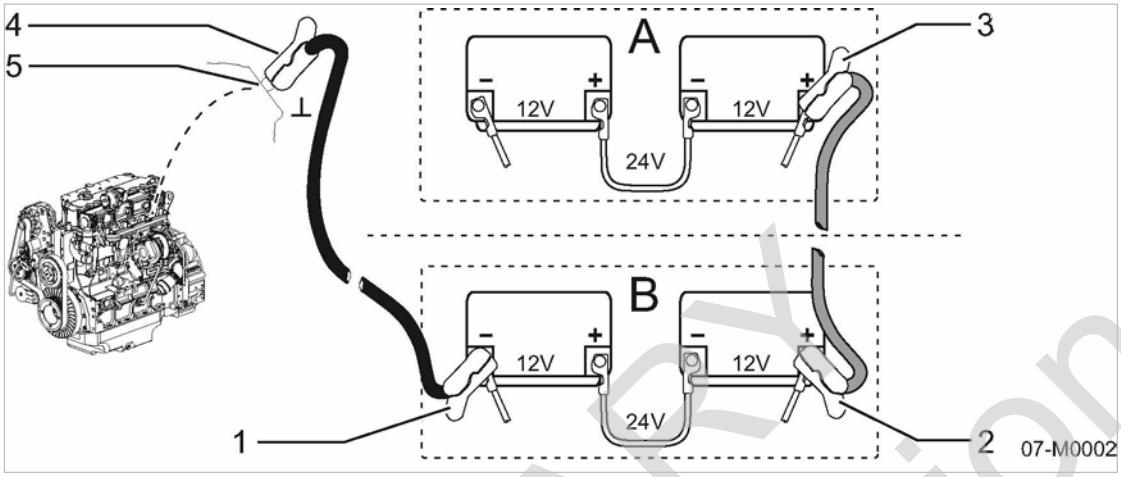

Fig. 21 Jumper cable connection diagram

- (A) Machine batteries (receiving batteries)
- (B) Assisting vehicle batteries (externally provided batteries)
- (1) Negative pole clamp (black/blue) on battery of assisting vehicle
- (2) Positive pole clamp (red) on battery of assisting vehicle
- (3) Positive pole clamp (red) on machine battery
- (4) Negative pole clamp (black/blue) on machine earth
- (5) Bare metal point on the airend (earth)

Complying with safety notes:

1. **⚠ WARNING** *Fault in jump-start process!*
   - ➤ *Connect batteries of the same nominal voltage only.*
   - ➤ *Ensure that machine and assisting vehicle do not touch.*
   - ➤ *Switch off all consumers prior to connecting and disconnecting the batteries.*
   - ➤ *Only use battery jumper cables of sufficient diameter and with insulated terminal clamps.*
   - ➤ *Observe the instructions provided with the battery jumper cables.*
   - ➤ *Keep jumper cables away from rotating parts.*
   - ➤ *Avoid short-circuits due to incorrect poling and/or bridging with tools.*
   - ➤ *Do not bend over the batteries when attaching jumper cables.*
   - ➤ *Do not attempt to start the machine if its batteries are frozen. Allow the batteries to thaw first!*
   - ➤ *Do not try to start the machine with a boost charger.*
2. Comply with the safety instruction listed when jump-starting and using starter batteries.

Preparations:

1. Park the assisting vehicle in close distance to the engine, without their bodywork coming into contact with each other.
2. Stop the engine of the assisting vehicle.
3. Open the accesses to the batteries (remove maintenance panels/bonnet and pole caps).
4. Switch off all power consumers.

PRELIMINARY Subject to Revision

Connecting the battery jumper cables:

1. Clamp the first terminal clamp [3] of the red jumper cable to the positive pole of the machine's battery.
2. Clamp the second terminal clamp [2] of the red jumper cable to the positive pole of the assisting vehicle's battery.
3. **⚠ DANGER** *Explosion hazard!*
   A spark may ignite an explosive gas mixture.
   - ➤ *Do not, under any circumstances, connect the negative pole of the assisting machine to the negative pole of the battery in the machine to be jump-started.*
     Sparks may be caused when connecting and disconnecting.
   - ➤ *Work with caution.*
4. Connect the first pole clamp [4] of the black jumper cable to the airend or a connected, solid and unpainted metal component of the machine [5] (as distant as possible to the batteries).
5. Clamp the second terminal clamp [1] of the black jumper cable to the negative pole of the assisting vehicle's battery.

Starting the engine:

1. Start the engine of the assisting vehicle and run at high speed.
2. Start the compressor engine.

Upon a successful start, run both engines run for approximately 10 – 15 minutes.
This is important, in particular for fully discharged batteries. In the beginning, they will only pick up little current and have a high internal resistance. Any voltage peaks occurring in the engine generator in this state can be attenuated only by the batteries of the assisting vehicle. In particular the engine electronics of the machine are sensitive to overvoltages and could be damaged easily.

Disconnecting the battery jumper cables:

1. Stop the engine of the assisting vehicle.
2. Disconnect the jumper cables in the reverse order, first negative (-) then positive (+) poles.
3. Replace the pole caps.
4. Close the maintenance panels and/or bonnet.

If the compressor engine stops as soon as the cables are disconnected, this could indicate major damage (e.g., to the engine generator or batteries) which must be repaired by a specialised workshop.

7.4.2 Option ba
Starting up low-temperature equipment

Option bb **Starting the engine coolant pre-heating:**

The engine coolant can be pre-heated to improve starting under cold conditions. The coolant pre-heating works according to the principle of self-circulation operation.

Coolant pre-heating should be started approx. 1 to 2 hours prior to the engine start.

➤ Start the coolant pre-heating as described in chapter 7.5.

PRELIMINARY
Subject to Revision

7.5 Option bb; od Commissioning electrical equipment

The auxiliary electrical equipment is pre-wired for operation. A separate mains power connection provides power. A common device plug is provided at the lower part of the machine, beneath the operator panel, for the connection with the supplied power cable.

The supply voltage must be permanently connected as long as the compressor is to be operated in standby mode. Trickle charging the battery ensures that it is always in a condition to start the portable compressor.

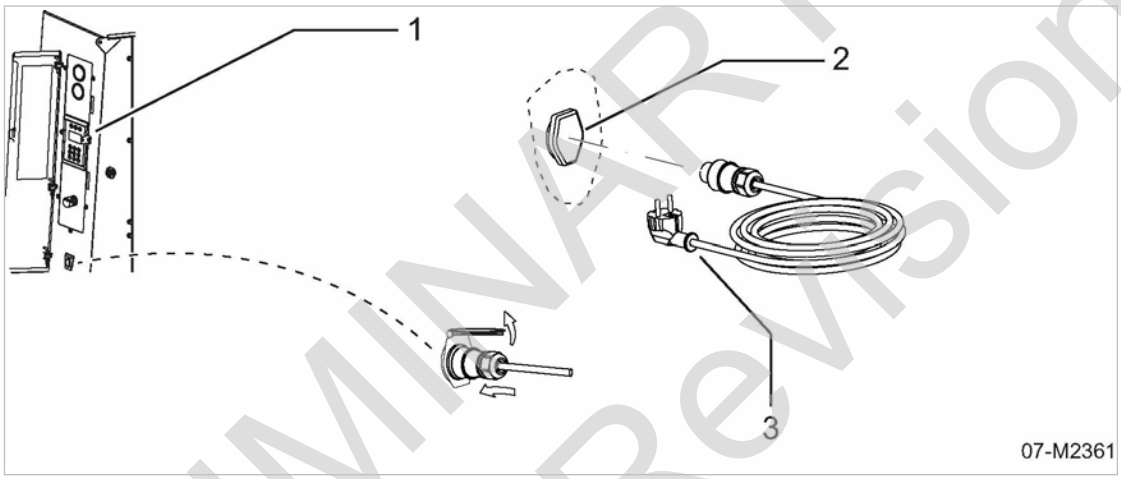

Fig. 22 Connect auxiliary electrical systems

1 Operating panel
2 Device connector (plug) for auxiliary electrical systems
3 Power cable

1. **DANGER** *Danger of fatal injury from electric shock!*
Serious injury or death can result from a short-circuit in the electrical equipment.
   - ➤ *The power cable for the electrical equipment may only be plugged into an electrical socket fitted with a protective earth.*
   - ➤ *Have the electrical equipment and associated wiring checked according to the maintenance schedule.*
2. Connect the power cable with the user's power outlet.

Further information Chapter 4.9.2 gives an overview of the electrical equipment.

PRELIMINARY Subject to Revision

8 Operation

8.1 Ensuring safety

Follow the instructions below for safe operation.
Warning instructions are located before a potentially dangerous task.

⚠ Disregard of warning instructions can cause serious injuries!

Complying with safety warnings

Disregard of safety warnings can cause unforeseeable dangers!

- ➤ Follow the instructions in chapter 3 “Safety and Responsibility”.
- ➤ Make sure that no one is working on the machine.
- ➤ Ensure that all service doors and panels are closed and secured.

Preventing accidental contact

Intensely heated, rotating, or electrically-live components can cause severe injuries.

- ➤ Ensure that all doors, canopy and panels are closed.
- ➤ Do not carry out any checks or settings while the machine is running.
- ➤ Shut down the machine before opening any doors/canopy.

When working on live components

Touching voltage-carrying components can result in electric shocks, burns or death.

- ➤ Work on electrical equipment may only be carried out by authorized electricians.

Safe working with compressed air tools and hoses

Open pressurized compressed air hoses move erratically and can cause serious injury to people.

- ➤ Pressurize compressed air hoses only after the tool has been connected.
- ➤ Do not pressurize open compressed air hoses.
- ➤ Detach compressed air hoses only after the hose has been purged of compressed air.
- ➤ At working pressures >100 psig, compressed air hoses should be secured by a cable to their respective outlet valves.

Condensate formation in compressed air hoses

Use the shortest possible compressed air hoses to minimize the temperature difference between the machine's compressed air outlet and the air tool. The hose length represents a cooling section. With increasing cooling, the compressed air gives off moisture capable of damaging the air tool.

- ➤ Use short compressed air hoses.

PRELIMINARY
Subject to Revision

Condensate formation in compressed air receivers

Compressed air stored in a containers will cool down. The compressed air precipitates moisture that collects at the container's bottom. Corrosion may damage the container.

➤ Regularly drain the condensate.

Further information Details of authorized personnel are found in chapter 3.4.2.
Details of dangers and their avoidance are found in chapter 3.5.

8.2 Starting and stopping

Precondition No personnel are working on the machine.
Service doors and panels are locked.

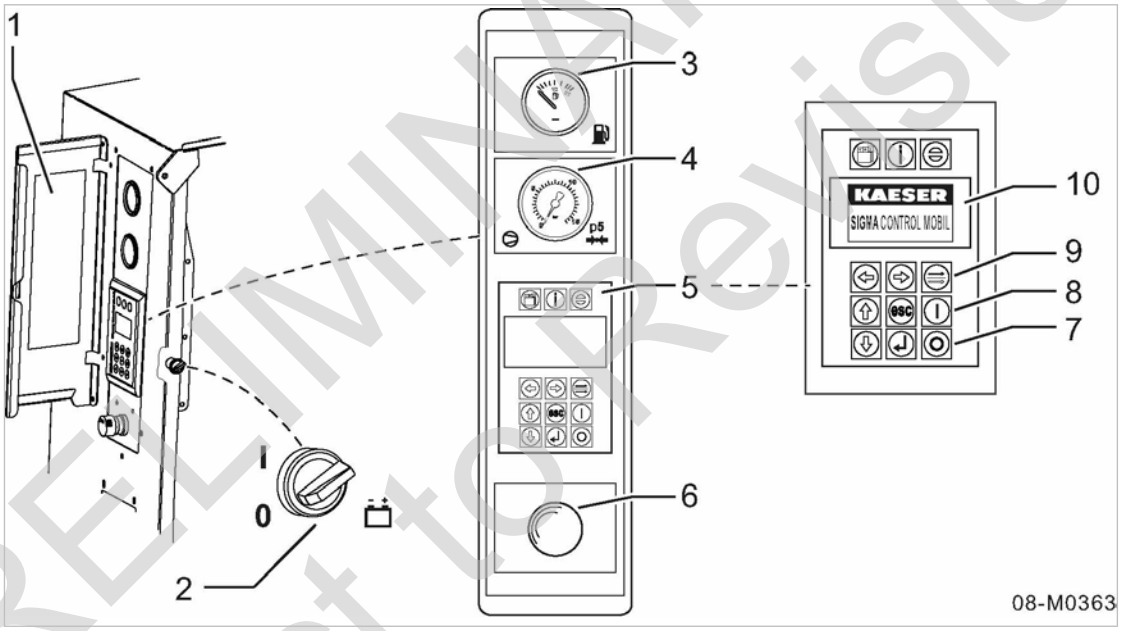

Fig. 23 Starting instruments

1. Operator panel cover with adhesive lable giving brief instructions
2. «Controller ON/OFF» switch
3. *Fuel gauge*
4. Compressed air outlet pressure gauge
5. SIGMA CONTROL MOBIL controller
6. «EMERGENCY STOP» push button
7. «STOP» key
8. «START» key
9. «LOAD/IDLE» toggle key
10. Display

8.2.1 Follow the brief instructions

Brief instructions containing symbolic information on starting and stopping are attached at the inside of the instrument panel cover.

PRELIMINARY Subject to Revision

Starting sequence

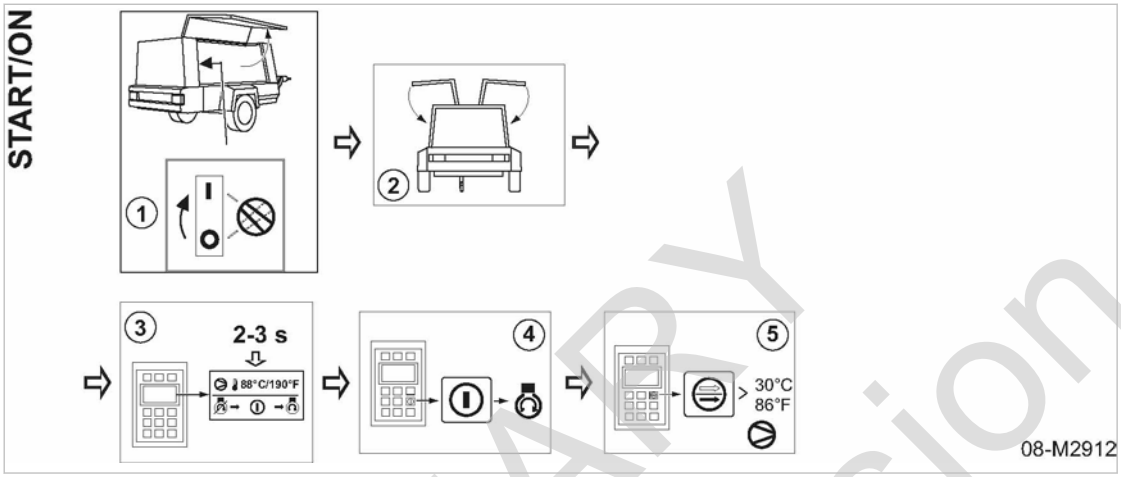

Fig. 24 Brief instructions on starting procedure

➤ Open the instrument panel cover and follow the brief instructions on the starting procedure attached at the inside.

Shut-down sequence

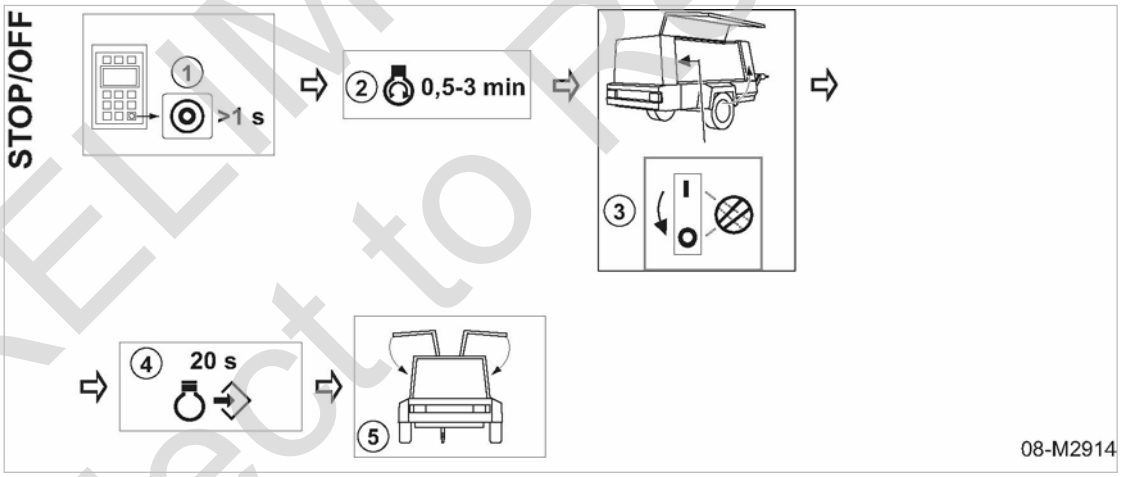

Fig. 25 Brief instructions on stopping procedure

➤ Open the instrument panel cover and follow the brief instructions on the stopping procedure attached at the inside.

The individual steps are fully explained below.

8.2.2 Commissioning the machine

Notes concerning snow and ice

Considerable snow or ice may build up on the machine under low temperature conditions.

➤ Remove any snow and ice from the machine before operating.

As a safety measure, check the function of the «EMERGENCY STOP» push-button.

PRELIMINARY
Subject to Revision

1. ⚠ WARNING *«EMERGENCY STOP» push-button locked out!*
   The machine cannot be stopped quickly in an emergency.
   ➤ *Check the function of the «EMERGENCY STOP» push-button.*
   ➤ *Do not operate the machine if the «EMERGENCY STOP» push-button does not work.*
2. Push the «EMERGENCY STOP» push-button.
   The «EMERGENCY STOP» push-button cannot be pressed or does not engage: Defrost the «EMERGENCY STOP» push-button.
3. Disengage the «EMERGENCY STOP» push-button again.

The «EMERGENCY STOP» push-button still does not function after defrosting.
➤ Have the «EMERGENCY STOP» push-button replaced.

8.2.3 Starting the machine

NOTICE

Serious damage to the engine from cold starting sprays!
Cold-start assists, such as ether or other sprays, can cause severe engine damage.
➤ *Do not use cold start sprays.*

Preparing the start:

1. Open the operator panel cover and the right door.
2. Switch on the «Controller ON/OFF» key.
   - The controller boots up and the Welcome page appears on the display.
   - If the temperature is below 32 °F, the engine control unit will automatically switch on engine pre-heating.
   - If the controller does not display any unacknowledged messages (see separate SIGMA CONTROL MOBIL operating manual, chapter “Functional description”), the display switches to *Operating mode* and signals readiness.
   - The «START» key flashes.
3. Close the door.

Starting the engine:

➤ Press the «START» key.
- The engine is started
- The machine is in *warm-up phase* and runs at IDLE speed.

The machine is ready to be switched to LOAD as soon as the specified machine temperatures are attained.
(For temperature settings, see chapter 2.6.4 "Temperature")

Result ⌛ → *The following set temperatures have been attained:*
– Airend discharge temperature (ADT)
– Engine coolant temperature (ECT)
The «START» key illuminates and the «LOAD» key flashes.
The machine is ready to be switched to LOAD.

PRELIMINARY Subject to Revision

Despite "preheating", the engine does not start in cold weather.
The engine is still too cold.
➤ Restart the controller.

1. Switch off the «Controller ON/OFF» switch.
2. Switch on the «Controller ON/OFF» switch.
3. Press the «START» button.

Result The engine preheats once again.

Switching the machine to LOAD operation:

➤ Press «LOAD/IDLE» key.
- The machine switches to LOAD mode and is ready to generate compressed air.
- The «LOAD/IDLE» key illuminates.

If the «LOAD» key is pressed before the required ADT or ECT are attained, the engine continues to run at IDLE speed. The controller switches automatically to LOAD when these temperature limits are reached.

Further information A representation of the operating sequence of the SIGMA CONTROL MOBIL is provided in the separate operating manual for the controller.

8.2.4 Regulating the shut-off valve

To prevent users' devices from venting when the compressor shuts down and automatically vents, a shut-off valve is installed in the control air line between oil separator tank and air distributor.

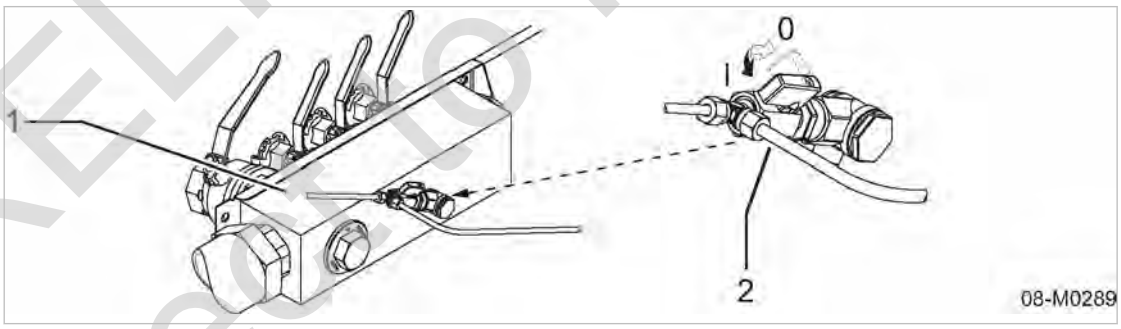

Fig. 26 Control line shut-off valve
1 Compressed air outlet distributor
2 Shut-off ball valve
I – Open
0 – Closed

1. Open the right-hand access door.
2. Check the shut-off valve in the control line.
   Shut-off valve is closed: open the shut-off valve.
   The machine is ready for operation.
3. Close the door.

8.2.5 Setting the compressed air discharge pressure

The compressed air discharge pressure is set from the instrument panel.

PRELIMINARY Subject to Revision

Setting is in increments of 0.1 psi and shown as a scale on the display.

⚠ CAUTION

Danger from incorrectly set pressure!
Danger from malfunctioning or not functioning compressed air tools when the machine's discharge pressure is set incorrectly.

- ➤ *Use connected compressed air tools only with the pressure appropriate for its purpose (tool working pressure).*
- ➤ *Comply with the information and notes provided in the compressed air tool's operating instruction.*

➤ Comply with the separate operating manual for the SIGMA CONTROL MOBIL controller.

8.2.5.1 Selecting the discharge pressure in the Settings menu

The Settings menu option for the discharge pressure can be reached in two ways:

- Quick access
- Entry via the menu structure

Quick access

Precondition LOAD run
<Main menu> (operating state) is selected.

➤ Press either «Left» or «Right».
This immediately selects the output setting menu.

Access via menu structure

Precondition LOAD operation.
*<Main menu => operating data – compressor >*is selected.
Enter the output pressure in the sub-menu "set pressure in oil separator tank"

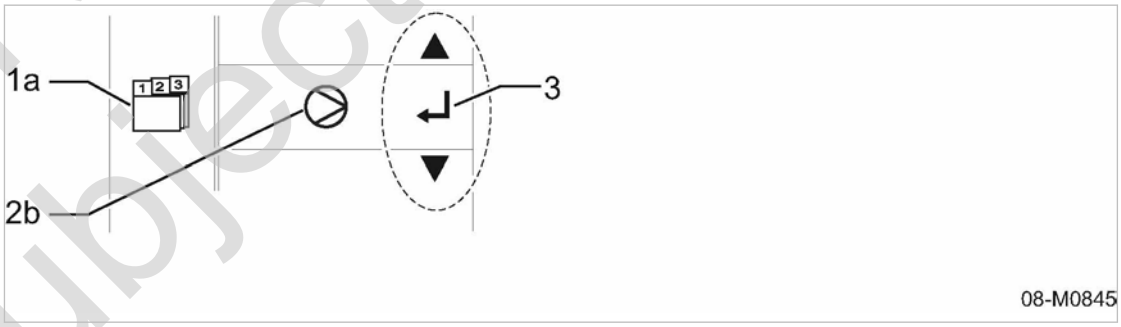

Fig. 27 Select menu option "set pressure in the oil separator tank"
1a Main menu
2b Compressor unit data
3 Menu navigation

1. Select the compressor data symbol and confirm with «Enter».
2. Press either «Up» or «Down».
   This immediately selects the output setting menu.

PRELIMINARY Subject to Revision

8.2.5.2 Setting pressure

- The pressure can only be set at lower than the nominal working pressure of the machine.
- A pressure setting 1.0 psi higher than nominal is possible with the appropriate password.
- This setting is only temporary and is reset to the maximum working pressure
  - if the keypad is not used for three minutes
  - when the controller is switched off.

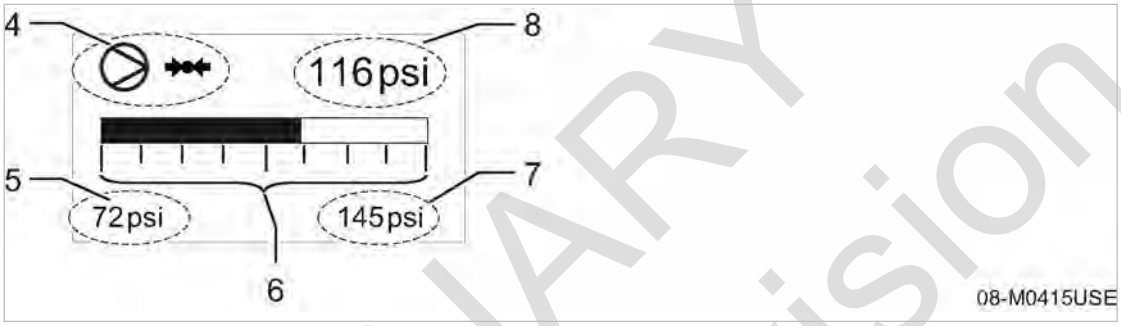

Fig. 28 Setting the output pressure

4	Select menu option "set pressure in the oil separator tank"	7	Maximum working pressure (upper setting limit)
5	Minimum working pressure (lower setting limit)	8	Current setting
6	Setting scale with indicator bar		

➤ Use «Right» and/or «Left» key to select the output pressure and check on the instrument panel pressure gauge.

The set pressure is saved when leaving the Setting menu option.

➤ Press «Escape».
The discharge pressure is set and the display changes to *Operating mode*.

8.2.6 Switching the machine to the run-on phase

➤ Press «LOAD/IDLE» key.
- The machine switches to *unloaded run-on*, that is:
  - the engine runs at IDLE speed.
  - the inlet valve closes
  - the machine vents and cools down.
- The «LOAD/IDLE» key flashes and displays:
  - The machine is ready for switching to LOAD mode.
  - The machine is ready for shutting down the motor/engine.

The cooled down machine can be switched off with the «STOP» key.

PRELIMINARY Subject to Revision

8.2.7 Shutting down the machine

NOTICE

Thermal overload of the turbocharger!
Abrupt stopping of the engine under load can cause a fault or damage to the turbo charger.

➤ *Run the engine a few minutes in idle before shutting down to allow the turbocharger to cool.*

➤ *Use the controller to shut down the machine as normal; do not use the «EMERGENCY STOP» push button to save time.*

Operating the machine in the run-on phase

➤ Press and hold the «STOP» key for more than one second.

- The machine switches to *unloaded run-on*, that is:
  - the engine runs at IDLE speed.
  - the inlet valve closes.
  - the machine vents and cools down.
- When the set cool-down period* has elapsed, the machine has cooled enough so that the engine can stop automatically.
  (* See also the separate SIGMA CONTROL MOBIL User Manual, chapter “Engine settings” “Setting the maximum cool-down time.)

- The controller display shows *back pressure* if the pressure in the oil separator tank is still > 1 psi.
- When the machine is fully vented, the display changes to *Ready to start*.
- When all pressure is vented from the OST after shut down, the restart inhibitor is activated and is indicated by the timer counting down from 20 seconds.

Switch the controller off:

1. Open the right-hand access door.
2. **NOTICE** *Memory fault!*
   Damage to the machine electronics and/or controller is possible.
   ➤ *Shut down the controller only after the engine control unit has completed saving.*
3. ⌛ Wait for approx. 0.5 to 3 minutes (saving process of motor/engine electronics).
4. Switch off the «Controller ON/OFF» key.

Make sure equipment is protected from venting

Compressed air lines to consumers should not vent when the compressor shuts down.
A typical example would be a user's auxiliary air receiver.

The shut-off valve must remain open for any other applications!

➤ Close the shut-off valve.

Further information Close the shut-off valve in the control line, see Fig. 26

PRELIMINARY
Subject to Revision

Secure the machine:

➤ Close all «compressed air outlet valves» on the air distributor.
➤ Close the operating panel cover and all doors. Lock if necessary.

8.2.8 Shutting down in an emergency

Stop the machine in case of danger by pressing the «EMERGENCY STOP» push button.

Use the «EMERGENCY STOP» push button to stop the machine only in **emergencies**.

Quick shut-down

➤ Press the «EMERGENCY STOP» push button.
- The engine stops immediately.
- The «EMERGENCY STOP» push button remains engaged after being pressed.
- The re-start inhibitor is activated (shut-off period 20 seconds).
- The «Information» and «STOP» keys are illuminated.
- The «Acknowledge» key flashes.

Put the machine back into operation

When the fault has been cleared, the machine must be reset.

Precondition Fault rectified.

➤ Disengage «EMERGENCY STOP» push button.
➤ Confirm the fault message with the «Acknowledge» key.
The «Information», «STOP» and «Acknowledge» keys are no longer illuminated.
The machine can now be started again.

8.3 Acknowledging alarm, warning and maintenance messages

Information from the controller is interpreted as displayed messages.
The message is stored in the event memory at the same time.

8.3.1 Confirming alarm messages

An alarm message is displayed,
- The machine is shut down and cannot be restarted.
- The «Information» key and the «STOP» key are illuminated.
- The «Acknowledge» key flashes.

Precondition Fault rectified.

➤ Confirm the message with the «Acknowledge» key.
The «Information», «STOP» and «Acknowledge» keys extinguish.

PRELIMINARY Subject to Revision

8.3.2 Acknowledging warning and maintenance messages

A fault warning message or notification of maintenance due is displayed, and:

- The «Information» key illuminates.
- The «Acknowledge» key flashes.

Precondition The cause of the warning is rectified.
Maintenance has been carried out.

➤ Confirm the message with the «Acknowledge» key.
The «Acknowledge» key is extinguished but the «Information» key is still illuminated.

The «Information» key continues to be illuminated when the machine is restarted until the fault is rectified or maintenance has been carried out.
Upon maintenance, the maintenance interval counter must be reset.

Further information For more information about the event memory and resetting the maintenance timer, see the separate operating manual of the SIGMA CONTROL MOBIL

8.4 Operating the options

➤ Comply with all instructions.

8.4.1 Option ob
Operating the machine with the “Automatic start/stop" option

If you purchased a machine with the "Automatic start/stop" option, the operator can select between running the controller in *automatic* or *manual* mode. The machine is factory-set for *automatic* operation when you switch the machine on. The machine can be controlled in *manual* mode as usual in normal operation.

The battery can deplete if the controller stays continuously switched on (readiness for automatic machine start). The starting voltage is insufficient to start the engine when needed. Moreover, deep discharge of the battery may result in battery damage.
➤ Use battery trickle charge.

Precondition External connector cable of the master controller connected.
No personnel are working on the machine
Maintenance doors/panels are locked

8.4.1.1 Preparing for start

➤ Switch the «Controller ON/OFF» key to ON.
- The controller boots up and the Welcome page appears on the display.
- If the temperature is below 32 °F, the engine control unit will automatically switch on engine pre-heating.
- If the controller does not display any unacknowledged messages (see separate SIGMA CONTROL MOBIL User Manual, chapter “Functional description”), the display switches to the display image 29 and signals readiness to start.
- The «START» button flashes.

PRELIMINARY
Subject to Revision

After switching on the machine (with automatic mode active) the «START» button must be pressed once to switch to *Ready to start*. Until this status is reached, the following message appears on the controller display:

Fig. 29 Preparing readiness to start of the "Automatic start/stop"

➤ Press the «START» button.

Wait for start command:

The display image 30 appears on the controller display and signals *Waiting for start command*.

Fig. 30 Waiting for start command

➤ Press the «START» button.

The machine is ready to start.

The remote contact of the master control system signals the compressed air demand to the controller:

- The motor/engine is automatically started.
- The controller switches the machine to LOAD as soon as the required airend discharge temperature (ADT)* has been attained.
- If the starting sequence fails or is interrupted by pressing the «EMERGENCY STOP» push-button, the “re-start inhibitor” is activated for 20 seconds. The display shows the remaining time before another start can be attempted.

Further information * For temperature settings, see chapter 2.6.4

8.4.1.2 Suspend automatic mode for operating cycle (forced manual operation)

If the «START» or «STOP» buttons are pressed for longer than two seconds, the controller switches to manual operation (manual mode) for this operating cycle.

➤ Push the «START», or «STOP» key longer than 2 seconds.

The machine can be controlled as usual in normal operation.

The activated manual operation can be cancelled again by activating the «Controller ON/OFF» switch.

PRELIMINARY Subject to Revision

8.4.1.3 Shutting down the machine

When the compressed air demand via the remote contact of the master controller ends, the machine shuts down as follows:

Machine switches to *run-on phase*:

- The engine runs at IDLE speed.
- The inlet valve closes.
- Oil separator tank (OST) is vented.
- When the set cool-down period* has elapsed, the machine has cooled enough so that the engine can stop automatically.
  (* See also the separate SIGMA CONTROL MOBIL User Manual, chapter “Engine settings” “Setting the maximum cool-down time.)

- If the pressure in the oil separator tank is still > 1 psi, the controller will activate the *back pressure* indicator.
- When the machine is fully vented, the display changes to *Ready to start.*
- When all pressure is vented from the OST after shut down, the restart inhibitor is activated and is indicated by the timer counting down from 20 seconds.

Switch the controller off:

1. **NOTICE** *Memory fault!*
   Damage to the machine electronics and/or controller is possible.
   ➤ *Shut down the controller only after the engine control unit has completed saving.*
2. ⌛ Wait for approx. 3 seconds until saving is complete.
3. Switch off the «Controller ON/OFF» switch.

Further information

Please see the separate User Manual for SIGMA CONTROL MOBIL for details on changing the parameters of the “Automatic start/stop” option and for changing the operating mode to *manual mode.*

8.4.2 Option bb
Running the coolant pre-heating

➤ Cary out the coolant pre-heating as described in chapter 7.4.2.

8.4.3 Option da/df, da/dd/df
Bypassing and activating the heat exchanger

➤ Open the left-hand door.

8.4.3.1 Option da/df
Selecting either B or A compressed air quality

You can choose between the following options provided for compressed air treatment:

- condensate-free and also heated compressed air
  → Compressed air quality B
- condensate-free compressed air only
  → Compressed air quality A

PRELIMINARY
Subject to Revision

Heat exchanger shut-off valve	Compressed air quality at the compressed air outlet	Compressed air quality, abbreviation
I	Condensate-free and heated compressed air	W
0	Condensate-free compressed air	A
I - Shut-off valve open; 0 - Shut-off valve closed		

Tab. 60 Shut-off valve position and selected compressed air quality

Precondition Machine shut down

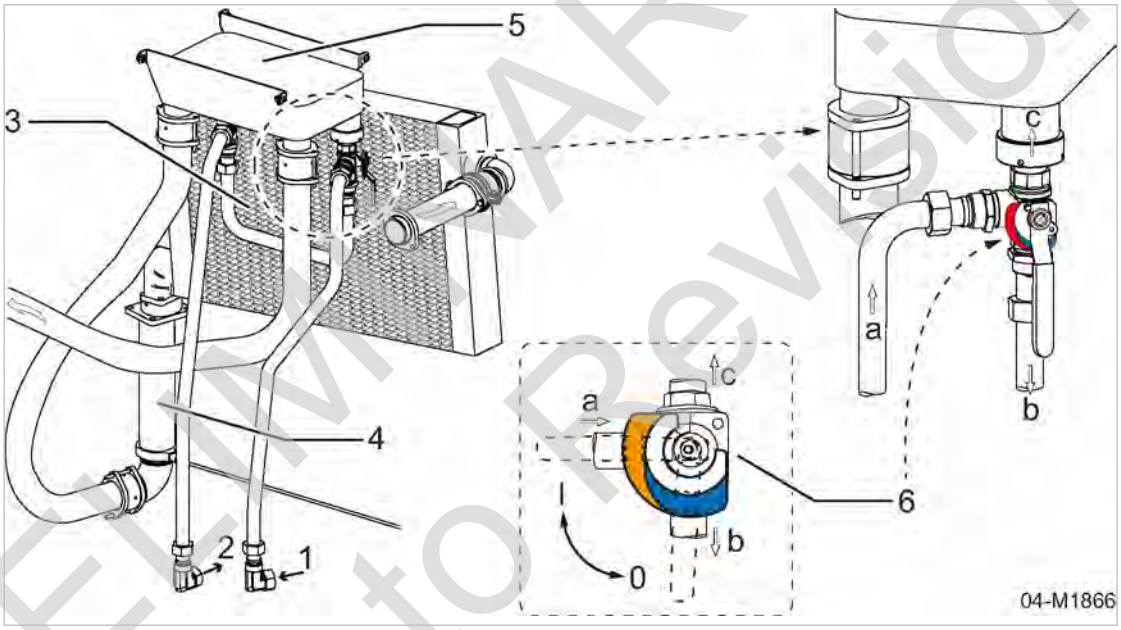

Fig. 31 Heat exchanger with bypass valve (shut-off valve)

1 Connection for oil separator tank (cooling oil inlet)
2 Connection for thermostatic valve (cooling oil outlet)
3 Compressed air aftercooler
4 Centrifugal separator
5 Heat exchanger
6 Shut-off valve (ball valve)
I - Open
0 - Closed
a Oil from the oil separator tank
b Oil via bypass to thermostatic valve
c Oil to heat exchanger

Activating the heat exchanger

➤ Open the shut-off valve at the heat exchanger (position I) → red marking.

Result The cooling oil flows from a to c, b is closed.

The oil/compressed air heat exchanger is part of the compressor's oil circuit. The compressed air fed through the heat exchanger is heated by the hot cooling oil of the compressor. "Condensate-free and heated compressed air" is available at the compressor air distributor.

Deactivating the heat exchanger

➤ Close the shut-off valve at the heat exchanger (position 0) → blue marking.

PRELIMINARY Subject to Revision

Result The cooling oil flows from ⓐ to ⓑ, ⓒ is closed.

The bypass line bridges the oil/compressed air heat exchanger and is not part of the compressor's oil circuit. The compressed air fed through the heat exchanger is not heated. Only " condensate-free compressed air" is then available at the compressed air distributor.

➤ Close the door.

8.4.3.2 Option da/dd/df
Selecting either G or F compressed air quality

You can choose between the following options provided for compressed air treatment:

- moisture-reduced, oil-free and also heated compressed air
  → Compressed air quality G
- moisture-reduced, oil-free compressed air only
  → Compressed air quality F

Heat exchanger shut-off valve	Compressed air quality at the compressed air outlet	Compressed air quality, abbreviation
I	Moisture-reduced, technically oil-free and heated compressed air	G
0	Moisture-reduced, technically oil-free compressed air	F
I - Shut-off valve open; 0 - Shut-off valve closed		

Tab. 61 Shut-off valve position and selected compressed air quality

Precondition Machine shut down

PRELIMINARY
Subject to Revision

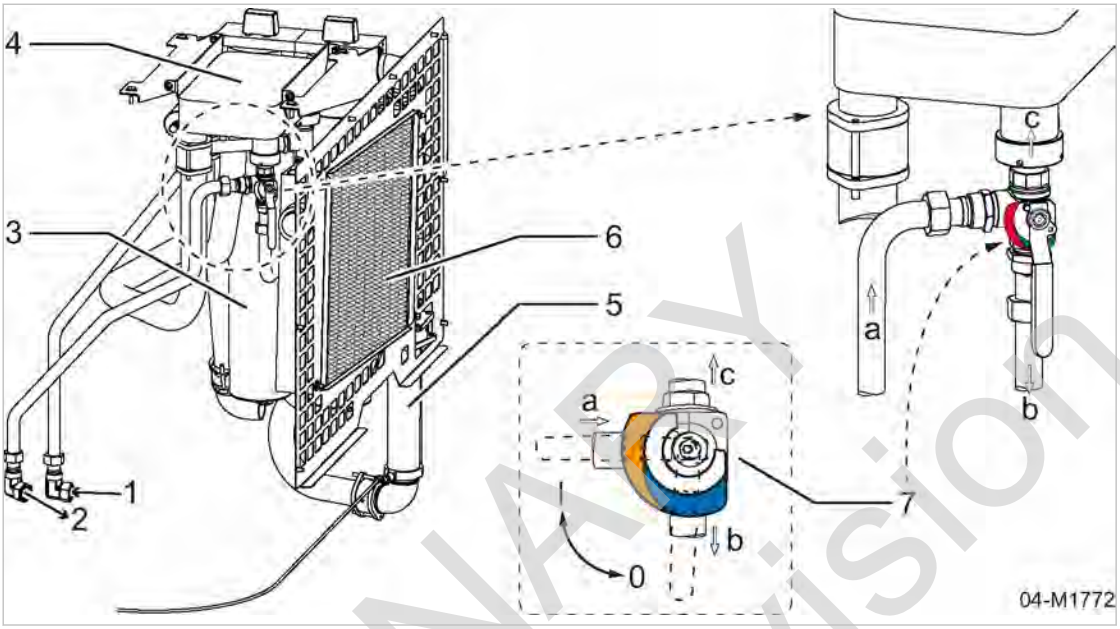

Fig. 32 Heat exchanger with bypass valve (shut-off valve)

1	Connection for oil separator tank (cooling oil inlet)	6	Compressed air aftercooler
2	Connection for thermostatic valve (cooling oil outlet)	7	Shut-off valve (ball valve) I - Open 0 - Closed
3	Filter combination	a	Oil from the oil separator tank
4	Heat exchanger	b	Oil via bypass to thermostatic valve
5	Centrifugal separator	c	Oil to heat exchanger

Activating the heat exchanger

➤ Open the shut-off valve at the heat exchanger (position I) → red marking.

Result The cooling oil flows from a to c, b is closed.

The oil/compressed air heat exchanger is part of the compressor's oil circuit. The compressed air fed through the heat exchanger is heated by the hot cooling oil of the compressor. "Technically oil-free, dry and heated compressed air" is available at the compressed air distributor.

Deactivating the heat exchanger

➤ Close the shut-off valve at the heat exchanger (position 0) → blue marking.

Result The cooling oil flows from a to b, c is closed.

The bypass line bridges the oil/compressed air heat exchanger and is not part of the compressor's oil circuit. The compressed air fed through the heat exchanger is not heated. "Technically oil-free and dry compressed air" is available at the compressed air distributor.

➤ Close the door.

PRELIMINARY Subject to Revision

8.4.4 Option da
Empty condensate collector after operation

When you operate the machine, especially if the ambient air is very humid, significant amounts of condensate can occur. The condensate level can be viewed in the transparent tank. The condensate collector must be emptied daily or when required, and prior to any transportation of the machine.

The maximum fill quantity is limited. Therefore, the condensate collector must be checked/maintained daily. If the condensate collector overflows, the condensate runs into the floor pan of the machine.

Material: Condensate collection tank

Precondition: The machine is switched off.
The machine has cooled down.
The machine is fully vented, the pressure gauge reads 0 psig.
All compressed air consumers are disconnected and the air outlet valves are open.

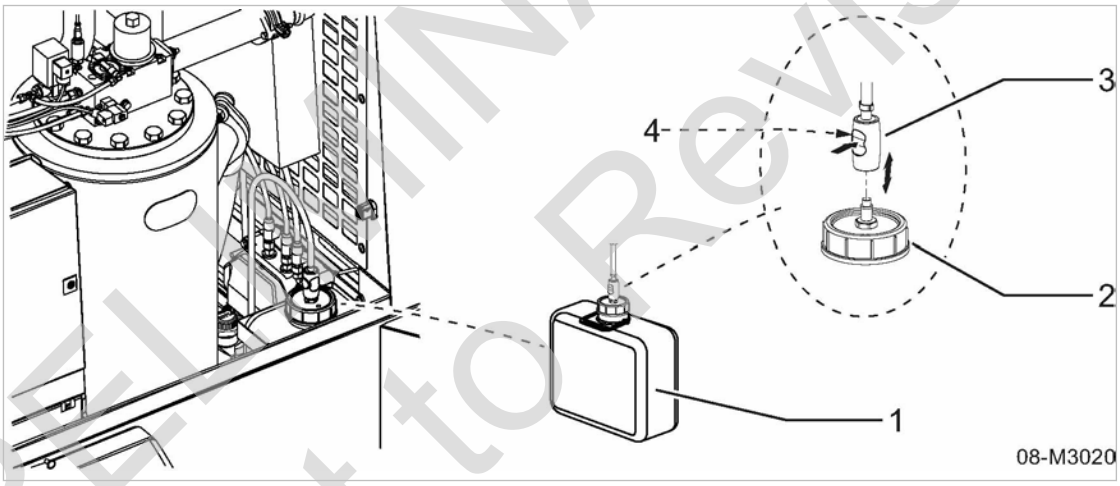

Fig. 33 Empty the condensate collector

1. Condensate collector (canister)
2. Filler cap, with plug-in nipple
3. Hydraulic coupling for condensate drain pipe
4. Quick-release coupling unlocking

1. Open the right-hand access door.
2. Trigger unlocking of quick-release coupling by pushing the button.
   - The coupling unlocks and releases the plug-in nipple on the filler cap.
   - The condensate drain pipe can be removed from the collector.
3. Remove condensate collector from the bracket inside the machine by using the hand grip.
4. Fill the condensate into a disposal container environmentally appropriately.
5. Place emptied condensate collector into bracket inside the machine.
6. Press quick-release coupling of condensate drain pipe onto plug-in nipple of the filler cap.
   The quick-release coupling clicks into place and locks.
7. Close the door.

Condensate emulsion contains contaminants and is harmful to the environment!

PRELIMINARY
Subject to Revision

Dispose of condensate in accordance with environment protection regulations.

Further information See Chapter 10.11.1.1 for information on checking the condensate drainage.

8.5 Cleaning the machine after operation

Material High-pressure cleaner

Precondition The machine is switched off.
The machine has cooled down.
The machine is fully vented, the pressure gauge reads 0 psig.
All compressed air consumers are disconnected and the air outlet valves are open.

Maintain the following minimum distances to the object to be cleaned in order to prevent damages to the machine when cleaning with the high-pressure cleaner.

- Circular section jets: approximately 2.3 ft
- Fan jets: approximately 1 ft
- Dirt blasters: approximately 1 ft

Keep the water jet in permanent motion during the cleaning process. You prevent thus damage.

Cleaning with dry-ice jets is strictly forbidden as it could cause unforeseeable damages.

1. **NOTICE** *Machine damage caused by strong water jet!*
   Direct water jets can damage or even destroy sensitive components.
   ➤ *Do not directly focus a strong water jet towards sensitive components.*
   ➤ *Work carefully.*
2. Carefully clean the machine with the high-pressure cleaner.

Water has accumulated in the sealed floor pan.
➤ Drain the water.

Catch the liquid and dispose in accordance with applicable environmental regulations.

Further information See chapter 10.11.5 for information to the draining of liquids within the machine.

PRELIMINARY Subject to Revision

9 Fault Recognition and Rectification

9.1 Basic instructions

The following tables are intended to assist in fault finding and rectification.

1. Do not attempt fault rectification measures other than those given in this manual!
2. In all other cases:
   Have the fault rectified by an authorized KAESER service representative.

Further information

Observe the instructions in chapter 3 "Safety and Responsibility" and prevailing local safety regulations when rectifying faults and malfunctions.
Comply with local applicable safety provisions!

9.2 SIGMA CONTROL MOBIL messages

There are three types of message:

- Alarm messages, see chapter 9.2.1
- Warning messages, see chapter 9.2.2
- Maintenance messages, see chapter 10.2

The messages valid for your machine are dependent on the controller factory settings and individual equipment with which the machine is provided.

9.2.1 Alarm messages on the controller (machine off)

Alarm with automatic deactivation of the machine.
The «Acknowledge» key flashes. The «Information» key and the «STOP» key are illuminated.

You must acknowledge the alarm message upon correction of the fault before you can restart the machine.

Further information

Further information on the acknowledgement of alarm messages can be found in Chapter 8.3.

Message codes, range 1100 – 1199 “Motor/engine faults”:

Code	Meaning	Remedy	See chapter	Where can I get help?	
				SW	KS
1100	Fault – oil pressure (p76) low.	Check the engine oil level.	10.4.4	–	–
		Have the engine oil pressure checked.	–	X	–
		Have the oil pressure switch checked.	–	X	X

SW = Specialised workshop; KS = KAESER SERVICE
SCM - SIGMA CONTROL MOBIL; ECU - Engine Control Unit
DPF = Diesel particulate filter; SCR - Selective Catalytic Reduction
DEF = Diesel exhaust fluid

PRELIMINARY Subject to Revision

Code	Meaning	Remedy	See chapter	Where can I get help?	
				SW	KS
1101	Fault – oil pressure sensor	Have the sensor changed.	–	X	X
1104	Fault oil temperature.	Have it checked.	–	X	X
1110	Fault – coolant temperature (T70) high.	Check the coolant level.	10.4.1	–	–
		Clean the cooler.	10.6	–	–
		Have the coolant cooling checked.	–	X	X
1111	Fault – coolant level too low.	Check the coolant level.	10.4.1	–	–
1112	Fault – sensor coolant temperature.	Have the sensor changed.	–	X	X
1120	Fault – fault in turbo air pressure.	Have the turbo air pressure sensor checked.	–	X	X
1121	Fault – turbo air temperature (T73) high.	Check setup conditions. Allow the machine to cool down.	5.2	–	–
		Clean the cooler.	10.6	–	–
1122	Fault – sensor turbo air pressure.	Have the sensor changed.	–	X	X
1123	Fault – sensor turbo air temperature.	Have the sensor changed.	–	X	X
1124	Fault - motor/engine fault air flow meter.	Have checked.	–	X	X
1130	Fault – fuel level too low.	Refuel.	–	–	–
1131	Fault – fuel temperature (T75) high.	Allow the machine to cool down.	–	–	–
1132	Fault – fuel pressure low.	Have checked.	–	X	X
		Clean / replace the fuel filter.	10.4.3	–	–
1133	Fault – sensor fuel temperature.	Have the sensor changed.	–	X	X
1134	Fault – sensor fuel pressure.	Have the sensor changed.	–	X	X
1135	Fault – fuel pump.	Have checked.	–	X	X
1136	Fault – floor pan fluid level.	Drain the liquid.	10.11.5	–	–
1140	Fault – motor/engine generator does not load.	Have it checked.	–	X	X

SW = Specialised workshop; KS = KAESER SERVICE

SCM - SIGMA CONTROL MOBIL; ECU - Engine Control Unit

DPF = Diesel particulate filter; SCR - Selective Catalytic Reduction

DEF = Diesel exhaust fluid

PRELIMINARY Subject to Revision

Code	Meaning	Remedy	See chapter	Where can I get help?	
				SW	KS
1141	Fault – ECU power supply.	Battery maintenance.	10.4.9	–	–
		Check battery charging system.	–	X	X
1150	Fault – ECU other faults.	Have checked.	–	X	X
1151	Fault – ECU-SCM communication.	Have it checked.	–	X	X
1160	Fault – rail pressure sensor.	Have checked.	–	X	X
1161	Fault – speed sensor.	Have checked.	–	X	X
1165	Fault - drive motor/engine speed low.	Have checked.	–	X	X
1170	Fault – automatic start mode fault.	Have it checked.	–	–	X
1171	Fault – manual stop automatic mode.	Unblock.	8.2.8	–	–
		Have checked.	–	–	X
1180	Fault – DPF fault.	Check DPF.	–	–	X
1181	Fault – DEF level low.	Fill tank.	–	–	–
1185	Fault – fault in emission treatment.	Have the emission treatment checked.	–	–	X
1186	Fault message emission treatment – temperature high.	Have the emission treatment checked.	–	–	X
1187	Fault message emission treatment – regeneration.	Have the emission treatment checked.	–	–	X
1189	Fault – SCR catalytic system error.	Have it checked.	–	X	X
1191	Fault – DEF quality deficient.	Have it checked. Have it changed if necessary.	–	X	X

SW = Specialised workshop; KS = KAESER SERVICE

SCM - SIGMA CONTROL MOBIL; ECU - Engine Control Unit

DPF = Diesel particulate filter; SCR - Selective Catalytic Reduction

DEF = Diesel exhaust fluid

Tab. 62 Alarm messages and actions concerning the engine.

PRELIMINARY Subject to Revision

Message codes, range 1200 – 1299 “Compressor faults”:

Code	Meaning	Remedy	See chapter	Where can I get help?	
				SW	KS
1200	Fault - ADT high.	Check operating conditions. Allow the machine to cool down.	5.2	–	–
		Check the cooling oil level.	10.5.1	–	–
		Clean the cooler.	10.6	–	–
1201	Fault - OST pressure high.	Have it checked.	–	–	X
1202	Fault - OST temperature high at the air outlet.	Check the cooling oil level.	10.5.1	–	–
		Clean the cooler.	10.6	–	–
		Change oil separator cartridge.	10.5.6	–	–

SW = specialised workshop; KS = KAESER SERVICE

ADT = Airend discharge temperature; OST - Oil separator cartridge

Tab. 63 Alarm messages and actions concerning the compressor unit

Message codes, range 1300 – 1399 “Controller faults”:

Code	Meaning	Remedy	See chapter	Where can I get help?	
				SW	KS
1300	Fault – PLC memory error	Have it checked.	–	–	X
1301	Fault PLC - GSM communication.	Have it checked.	–	–	X
1302	Fault PLC – HMI communication.	Have it checked.	–	–	X
1303	Fault PLC – temperature high.	Check setup conditions. Allow the machine to cool down.	5.2	–	–
1304	Fault – PLC power supply.	Have it checked.	–	–	X
1306	PLC - ECU communication fault.	Have checked.	–	–	X
1310	Fault – Fault in Watchdog.	Have it checked.	–	–	X

SW = Specialised workshop; KS = KAESER SERVICE

PLC = Programmable Logic Controller; HMI = Controller display; GSM = Global system for mobile communications; ECU = Engine Control Unit; Watchdog = Function monitoring

Tab. 64 Fault messages and actions concerning the controller

PRELIMINARY Subject to Revision

Message codes, range 1400 – 1499 “General faults”:

Code	Meaning	Remedy	See chapter	Where can I get help?	
				SW	KS
1400	Fault - EMERGENCY STOP.	Disengage «EMERGENCY STOP» push button.	8.2.8	–	–
		Have it checked.	–	–	X
1410	Fault - OST pressure sensor open circuit.	Have repaired.	–	–	X
1411	Fault – OST pressure sensor short-circuit.	Have repaired.	–	–	X
1412	Fault – inlet valve pressure sensor open circuit.	Have repaired.	–	–	X
1413	Fault – inlet valve pressure sensor short-circuit.	Have repaired.	–	–	X
1414	Fault – ADT sensor open circuit.	Have repaired.	–	–	X
1415	Fault – ADT sensor short-circuit.	Have repaired.	–	–	X
1416	Fault – fuel level sensor open circuit.	Have repaired.	–	–	X
1417	Fault – fuel level sensor short-circuit.	Have repaired.	–	–	X
1420	Fault – venting valve open circuit.	Have repaired.	–	–	X
1421	Fault – venting valve open circuit.	Have repaired.	–	–	X
1422	Fault – auxiliary venting valve open circuit.	Have repaired.	–	–	X
1423	Fault – auxiliary venting valve short-circuit.	Have repaired.	–	–	X
1424	Fault – inlet valve control valve open circuit.	Have repaired.	–	–	X
1425	Fault – inlet valve control valve short-circuit.	Have repaired.	–	–	X
1426	Fault – frost protector valve open circuit.	Have repaired.	–	–	X
1427	Fault – frost protector valve short-circuit.	Have repaired.	–	–	X
1450	Fault – GSM module control locked.	Unblock GSM/GPS module.	–	–	X

SW = Specialised workshop; KS = KAESER SERVICE

OST = oil separator tank; ADT = Airend discharge temperature; GSM = Global system for mobile communications

Tab. 65 Alarm messages and troubleshooting in "General faults"

PRELIMINARY Subject to Revision

9.2.2 Warning messages on the controller

The machine is not shut down.
The «Acknowledgement» key flashes. The «Information» key illuminates.

- In the case of an overheating warning, the machine switches automatically to IDLE to cool down.
- The warning message must be confirmed after remedying the fault.

Further information

Further information on the acknowledgement of warning messages can be found in chapter 8.3.

Message codes, range 3100 – 3199 “Engine warning":

Code	Meaning	Remedy	See chapter	Where can I get help?	
				SW	KS
3100	Warning – oil pressure (p76) low.	Check the motor/engine oil level.	10.4.4	–	–
		Have the engine oil pressure checked.	–	X	–
		Have the oil pressure switch checked.	–	X	X
3102	Warning – oil level low.	Replenish motor/engine oil.	10.4.5	–	–
3103	Warning – oil level high.	Check the motor/engine oil level and drain, if necessary.	10.4.4	–	–
3104	Warning - oil temperature high.	Have it checked.	–	X	X
3105	Warning – oil quality poor.	Change oil.	10.4.6	X	X
3110	Warning – coolant temperature (T70) high.	Check the coolant level.	10.4.1	–	–
		Clean the cooler.	10.6	–	–
		Have the coolant cooling checked.	–	X	X
3121	Warning – charge air temperature (T73) high.	Check setup conditions. Allow the machine to cool down.	5.2	–	–
		Clean the cooler.	10.6	–	–
		Have the charge air pressure sensor checked.	–	X	X
3130	Warning – fuel level low.	Refuel.	–	–	–

SW = Specialised workshop; KS = KAESER SERVICE

SCR - Selective Catalytic Reduction; DPF - Diesel Particulate Filter

DEF = Diesel exhaust fluid

UM SCM = Separate user manual for the SIGMA CONTROL SMART controller

PRELIMINARY Subject to Revision

Code	Meaning	Remedy	See chapter	Where can I get help?	
				SW	KS
3131	Warning – fuel temperature (T75) high.	Check setup conditions. Allow the machine to cool down.	5.2	–	–
		Have it checked.	–	X	X
3132	Warning – fuel pressure (T75) high.	Have it checked.	–	X	X
3133	Warning - fuel temperature sensor (T75) faulty.	Have it checked.	–	X	X
3134	Warning - fuel pressure sensor (p75) faulty.	Have it checked.	–	X	X
3135	Warning - fuel pump.	Have it checked.	–	X	X
3136	Warning – fuel filter water level.	Empty the fuel filter (water trap)	10.4.3	–	–
3154	Warning - drive engine sensor fault.	Have it checked.	–	X	X
3155	Warning - drive engine actuator fault.	Have it checked.	–	X	X
3165	Warning – engine speed low.	Have it checked.	–	X	X
3181	Warning – DEF level low.	Fill DEF tank.	–	–	X
3182	Warning – torque reduction active.	Fill DEF tank.	–	–	X
3183	Warning – torque reduction next start.	Fill DEF tank.	–	–	X
3184	Warning – fault in ambient temperature sensor.	Check/repair.	–	–	X
3185	Warning - fault in exhaust gas treatment.	Have the exhaust gas treatment checked.	–	–	X
3186	Warning – exhaust gas treatment – temperature high.	Have the exhaust gas treatment checked.	–	–	X
3187	Warning – exhaust gas treatment – regeneration.	Have the exhaust gas treatment checked.	–	–	X
3188	Warning - standstill regeneration required.	Start the standstill regeneration.	UM SCM	–	–
3189	Warning – SCR catalytic converter system error.	Have it checked.	–	X	X
3190	Warning - DPF exchange required.	Have the DPF replaced.	–	X	–

SW = Specialised workshop; KS = KAESER SERVICE

SCR - Selective Catalytic Reduction; DPF - Diesel Particulate Filter

DEF = Diesel exhaust fluid

UM SCM = Separate user manual for the SIGMA CONTROL SMART controller

PRELIMINARY Subject to Revision

Code	Meaning	Remedy	See chapter	Where can I get help?	
				SW	KS
3191	Warning – AdBlue quality insufficient.	Have it checked. Have it changed if necessary.	–	X	X

SW = Specialised workshop; KS = KAESER SERVICE
SCR - Selective Catalytic Reduction; DPF - Diesel Particulate Filter
DEF = Diesel exhaust fluid
UM SCM = Separate user manual for the SIGMA CONTROL SMART controller

Tab. 66 Warning messages and measures relating to the engine

Message codes, range 3200 – 3299 “Compressor unit warnings”:

Code	Meaning	Remedy	See chapter	Where can I get help?	
				SW	KS
3200	Warning – ADT high.	Check setup conditions. Allow the machine to cool down.	5.2	–	–
		Check the cooling oil level.	10.5.2	–	–
		Clean the cooler.	10.6	–	–
3201	Warning – OST pressure high.	Have it checked.	–	–	X

SW = Specialised workshop; KS = KAESER SERVICE
OST = oil separator tank; ADT = Airend discharge temperature

Tab. 67 Warning messages and measures relating to the compressor

9.3 Evaluating engine faults and alarms

9.3.1 Engine refuses to start or does not turn over

Possible cause	Measure	Where can I get help?	
		SW	KS
«EMERGENCY STOP» push button activated.	Unlatch the «EMERGENCY STOP» push button, see chapter 8.2.8.	–	–
Defective starter.	Have changed.	X	–
Engine electrical fault	Have repaired/changed.	X	–
Fuel tank empty.	Fill up the fuel tank	–	–
Airlock in the fuel line between fuel tank and injector pump.	Bleed the fuel line (see chapter 10.4.3).	–	–

SW = Specialized workshop; KS = KAESER SERVICE

PRELIMINARY Subject to Revision

Possible cause	Measure	Where can I get help?	
		SW	KS
Fuel filter clogged.	Clean or replace, see chapter 10.4.3.	–	–
Fuel line broken.	Have changed.	X	–
Defective control fuse or relay.	Have repaired or replaced if necessary.	X	X
Discharge temperature too high.	Have checked.	–	X
SIGMA CONTROL MOBIL defective.	Have repaired/changed.	–	X
Electrical connections and/or cables loose or broken.	Tighten the connection or have the cable replaced.	X	–
Defective battery or low charge.	Maintain battery, see chapter 10.9.	–	–
Motor alternator defective.	Have changed.	X	–
Defective alternator regulator.	Have changed.	X	–
Oil pressure switch indicating insufficient oil pressure.	Check the engine oil level (see chapter 10.4.4).	–	–
	Have the engine repaired or exchanged.	X	–
SW = Specialized workshop; KS = KAESER SERVICE			

Tab. 68 Fault: engine refuses to start or comes to a stop.

9.3.2 Engine does not reach full speed

Possible cause	Measure	Where can I get help?	
		SW	KS
Airlock in the fuel line between fuel tank and injector pump.	Bleed the fuel line (see chapter 10.4.3).	–	–
Fuel filter clogged.	Clean or replace, see chapter 10.4.3.	–	–
Fuel line broken.	Have changed.	X	–
Engine electrical fault	Have repaired/changed.	X	–
SIGMA CONTROL MOBIL defective.	Have repaired/changed.	–	X
Cleaning process of the diesel particulate filter is active.	Wait until cleaning is complete.	X	X
Torque reduction active.	Check/top up the reducing agent in the tank.	X	X
	Have the exhaust system checked.	X	X
SW = Specialized workshop; KS = KAESER SERVICE			

Tab. 69 Alarm: "engine does not reach full speed".

PRELIMINARY Subject to Revision

9.4 Analysing compressor faults and alarms

9.4.1 Working pressure too high

Possible cause	Measure	Where can I get help?	
		SW	KS
Proportional controller defective.	Have repaired or replaced if necessary.	–	X
Inlet valve does not close.	Check the controller, control line and inlet valve and replace if necessary.	–	X
Pressure gauge indicating incorrect reading.	Have it repaired or replaced if necessary.	–	X
Venting valve does not blow off.	Check the connections and function and have it repaired or replaced as necessary.	–	X
SW = Specialised workshop; KS = KAESER SERVICE			

Tab. 70 Fault: working pressure too high

9.4.2 Working pressure too low

Possible cause	Measure	Where can I get help?	
		SW	KS
Proportional controller defective.	Have repaired or replaced if necessary.	–	X
Inlet valve not opening or only opening partially.	Repair or have it replaced if necessary.	–	X
Pressure gauge indicating incorrect reading.	Have it repaired or replaced if necessary.	–	X
Safety valve maladjusted and/or leaking.	Have it repaired or replaced if necessary.	–	X
Venting valve blowing off.	Check the connections and function and have it repaired or replaced as necessary.	–	X
Engine does not run at maximum speed (in LOAD mode).	See chapter 9.3	X	X
Engine air filter and/or compressor air filter clogged.	Clean or change, see chapters 10.4.2 and 10.5.7.	–	–
Oil separator cartridge heavily clogged.	Change, see chapter 10.5.6.	–	–
SW = Specialised workshop; KS = KAESER SERVICE			

Tab. 71 Fault: working pressure too low

PRELIMINARY Subject to Revision

9.4.3 Safety valve blows off

Possible cause	Measure	Where can I get help?	
		SW	KS
Oil separator cartridge heavily clogged.	Change, see chapter 10.5.6.	–	–
Inlet valve does not close.	Check the controller, control line and inlet valve and replace if necessary.	–	X
Safety valve maladjusted and/or leaking.	Adjust or have it replaced if necessary.	–	X
SW = Specialised workshop; KS = KAESER SERVICE			

Tab. 72 Fault: safety valve blowing off

9.4.4 Machine overheating

Possible cause	Measure	Where can I get help?	
		SW	KS
Defective cooling fan.	Have the blades or the complete fan wheel replaced.	–	X
Oil cooler surface clogged.	Clean surface, see chapter 10.6.	–	–
The working element of the thermostatic valve not working.	Have it repaired or replaced if necessary.	–	X
Working pressure too high (proportional controller maladjusted).	Reset to the permissible value or have it replaced.	–	X
Oil separator cartridge heavily clogged.	Measure the pressure differential and change the cartridge if greater than 1 psi. Change, see chapter 10.5.6.	–	X
Compressor oil filter cartridge clogged.	Change, see chapter 10.5.4.	–	–
Compressor cooling oil level too low.	Replenish, see chapter 10.5.2.	–	–
Oil pipes leaking.	Seal leaks or have pipes changed.	X	X
Engine coolant cooling or engine cooling fan defective.	Have it repaired.	X	X
Ambient temperature too high.	See installation conditions in chapter 5.2.	–	–
SW = Specialised workshop; KS = KAESER SERVICE			

Tab. 73 Fault: machine overheating

PRELIMINARY Subject to Revision

9.4.5 Too much oil residue in the compressed air

Possible cause	Measure	Where can I get help?	
		SW	KS
Oil separator cartridge oil return line of compressor clogged.	Clean the oil separator cartridge dirt trap or replace the strainer and nozzle if necessary. See chapter 10.5.5	–	X
Cracked oil separator cartridge.	Change, see chapter 10.5.6.	–	–
Oil level in the oil separator tank too high.	Reduce to maximum level, see chapters 10.5.1 and 10.5.3.	–	–
SW = Specialised workshop; KS = KAESER SERVICE			

Tab. 74 Alarm: "Too much oil residue in the compressed air"

9.4.6 Oil flows from the compressor air filter after shutdown

Possible cause	Measure	Where can I get help?	
		SW	KS
Defective non-return function of the inlet valve.	Repair or have it replaced if necessary.	–	X
SW = Specialised workshop; KS = KAESER SERVICE			

Tab. 75 Alarm: "Oil flows from the compressor air filter after shutdown"

9.4.7 Option da, df, dc, dd High moisture content in the compressed air

Possible cause	Measure	Where can I get help?	
		SW	KS
Blocked condensate drain on the cyclone separator.	Clean the cyclone separator dirt trap or replace the strainer and nozzle if necessary. See chapter 10.11.1	–	X
SW = Specialised workshop; KS = KAESER SERVICE			

Tab. 76 Fault: high moisture content in the compressed air

PRELIMINARY Subject to Revision

10 Maintenance

10.1 Ensuring safety

Follow the instructions below to ensure safe machine maintenance.

Warning instructions are displayed prior to a potentially dangerous task.

Disregarding warning instructions can cause serious injuries!

Compliance with safety instructions

Disregard of safety warnings can cause unforeseeable dangers!

- ➤ Follow the instructions in chapter 3 'Safety and Responsibility'.
- ➤ Maintenance work may only be carried out by authorized personnel.
- ➤ Do not reuse removed self-locking nuts but replace with new ones. The non-positive safety against loosening is no longer ensured when the nut is unscrewed.
- ➤ Use one of the safety signs below to advise others that the machine is currently being serviced:

Symbol	Meaning
	Don't activate the machine.
	Warning: The machine is being serviced.

Tab. 77 Advise others that the machine is being serviced.

- ➤ Before switching on, make sure that:
  - no personnel is working on the machine,
  - all protective guards and cover panels are attached,
  - all doors, canopy, and panels are closed,
  - all tools have been removed from the machine.
- ➤ Do not perform any checks or maintenance while the machine is running.

The access doors are held up by gas struts.

➤ Check that the doors remain open.

If door does not remain opened: Have the gas-filled spring changed.

When working on the compressed air system

Compressed air is contained energy. Uncontrolled release of this energy can cause serious injury or death. The following safety instructions relate to any work on components that could be under pressure.

- ➤ Disconnect the air consumers.
- ➤ Depressurize all pressurized components and enclosures. Verify the vented state.
  - Wait until the machine has automatically vented.

PRELIMINARY Subject to Revision

- Carefully open the compressed air outlet valve.
- Check: The pressure gauge must read 0 psig!

➤ Do not open or dismantle any valves.

When working on the drive system

Touching rotating, very hot or current-carrying components can cause severe injuries.

➤ Shut down the machine before opening any doors/canopy.

➤ Disconnect the negative terminals on the batteries.

➤ Ensure that the machine has cooled down.

Further information Details of authorized personnel are found in chapter 3.4.2.
Details of dangers and their avoidance are found in chapter 3.5.

10.2 Note the maintenance messages on the controller

The SIGMA CONTROL MOBIL displays selected maintenance intervals. Display begins 25 hours before the interval will expire.

When the machine is switched on, the «Information» key illuminates. The «Acknowledge» key flashes.

➤ Read the message code from the controller's display.

10.2.1 Evaluating the maintenance message

➤ Determine any due maintenance tasks using the table below and perform the maintenance according to the maintenance schedule shown in chapter 10.3.3.1.

Code	Meaning	Remedy	see chapter
Message code, range 2100 – 2199 “engine maintenance”			
2100	Maintenance message drive motor - renew oil filter	Change the engine oil filter. (every 500 hours)	10.4.7
2101	Maintenance message drive motor - clean/replace air filter.	Clean or change air filter. (every 500 hours)	10.4.2
2102	Maintenance message drive motor - change the oil	Change the engine oil. (every 500 hours)	10.4.6
Message codes, range 2200 – 2299 “compressor unit maintenance”			
2200	Maintenance message compressor - renew oil filter	Replace the compressor oil filter. (every 1000 hours)	10.5.4
2201	Maintenance message compressor - clean/replace the air filter.	Clean or change the compressor air filter. (every 250 hours)	10.5.7
2201	Maintenance message compressor - change the cooling oil.	Replace the compressor cooling oil. (every 1000 hours)	10.5.3
h - operating hours			

Tab. 78 Maintenance messages and required actions

PRELIMINARY Subject to Revision

10.2.2 Concluding the maintenance

Acknowledge the maintenance message:

Precondition Maintenance has been carried out.

➤ Acknowledge the maintenance message as described in chapter 8.3.

Resetting the maintenance interval counter

Precondition Maintenance is carried out and
the maintenance message is acknowledged.

➤ Reset the maintenance timer as described in the separate operating manual for the SIGMA CONTROL MOBIL controller, chapter “Reset maintenance timer”.

10.3 Maintenance schedules

10.3.1 Logging maintenance work

The maintenance intervals given are those recommended for KAESER original components with average operating conditions.

➤ In adverse conditions (e.g. oil and filter changes), perform maintenance work at shorter intervals.

Adverse conditions are, e.g.:

- poor fuel quality
- high/low temperatures
- a lot of dust
- frequent use

➤ Adjust the maintenance intervals with regard to local installation and operating conditions.

➤ Logging all maintenance work.
This enables the frequency of individual maintenance tasks and deviations from our recommendations to be determined.

Further information A list is given in chapter 10.12.

10.3.2 Maintenance tasks after commissioning

The tables below lists maintenance tasks required after commissioning (initial start-up).

PRELIMINARY
Subject to Revision

10.3.2.1 Maintenance tasks on the machine after commissioning

➤ Carry out maintenance tasks according to the following schedule.

Component: Task	E50	See chapter	Note
Engine:			
Check belt tension and re-tension if necessary.	X	10.4.8	KS; SW
E50 = after the first 50 operating hours KS = Contact KAESER SERVICE; SW = Contact specialized workshop			

Tab. 79 Maintenance tasks on the machine after commissioning

10.3.3 Regular maintenance tasks

The following table lists the various maintenance intervals.

Maintenance interval	Short description
Daily	–
Every 250 h, at least annually.	A250
Every 500 h, at least annually.	A500
Every 1000 h, at least annually.	A1000
Every 1500 h, at least annually.	A1500
Every 2000 h, at least every two years.	A2000
Every 3000 h, at least every 3 years.	A3000
Every 4000 operating hours	A4000
Every 6000 operating hours	A6000
Every 36000 h, at least every six years.	A36000

Tab. 80 Maintenance intervals and regular maintenance tasks

The table below lists regular maintenance tasks.

1. Carry out maintenance tasks punctually taking ambient and operating conditions into consideration.
2. Change consumables and operating fluids according to each site.

PRELIMINARY
Subject to Revision

10.3.3.1 Machine maintenance schedule

➤ Carry out maintenance tasks according to the following schedule:

The maintenance work marked with (*) in the tables must additionally be carried out every 6 months if the annual operational performance is more than 500 operational hours.

Assembly: Task	Daily	A250	A500	A1000	A1500	A2000	A3000	A4000	A6000	A36000	See chapter	Note
Engine:												
Check engine air filter maintenance indicator.	X										10.4.2	
Check the engine oil level.	X										10.4.4	
Clean the engine air filter.			X								10.4.2	
Replace the engine oil(*).			X								10.4.6	
Replace the engine oil filter(*).			X								10.4.7	KS; SW
Check/adjust the drive belt tension.			X								10.4.8	KS; SW
Have the V-ribbed belt / jockey wheel checked.				X								KS; SW
Replace the engine air filter.				X							10.4.2	
Have intercooler maintained.				X								KS; SW
Have turbocharger checked and cleaned.									X			KS; SW
Check the engine mounts.				X								KS; SW
Have the valves adjusted.						X						KS; SW
Replace the drive belt.						X					10.4.8	KS; SW
Have the V-ribbed belt / jockey wheel checked/replaced.								X				KS; SW
Check the engine coolant level.	X										10.4.1	
Clean the cooler.		X									10.6	
Check the coolant frost protection.			X								10.4.1	KS; SW
Change the coolant.							X				10.4.1	KS; SW
Fill up the fuel tank.	X											
Empty the fuel prefilter (water separator).	X										10.4.3	
Clean/change the fuel filter.			X								10.4.3	KS; SW

KS = Contact KAESER SERVICE, SW = Contact specialised workshop, DEUTZ = Contact engine manufacturer DEUTZ

SCM = SIGMA CONTROL MOBIL controller

DPF = Diesel particulate filter; SCR = Selective Catalytic Reduction

PRELIMINARY Subject to Revision

Assembly: Task	Daily	A250	A500	A1000	A1500	A2000	A3000	A4000	A6000	A36000	See chapter	Note
Have the fuel pump cleaned.				X								KS; SW
Clean the tank fuel strainer.			X									
Clean the fuel tank.			X									
Replace the fuel prefilter(*).				X							10.4.3	
Replace the fuel filter(*).				X							10.4.3	KS; SW
Check the fuel return line for leakage and firm seat.			X									
Have the injector nozzles checked.								X				KS; SW
Have the fuel injection pump checked.								X				KS; SW
Check the battery electrolyte level and maintain the connections.			X								10.4.9	
Check fuel tank for secure fixing.		X									10.4.10	
Have the engine monitoring checked.				X								KS; SW
Exhaust gas treatment:												
Check the exhaust system and the components of the exhaust gas treatment system for leaks.	X											
Have the exhaust return line checked.						X						KS; SW
Have the DPF system checked.			X									KS; SW
Have the DPF replaced.												*Warning SCM!* KS; DEUTZ
Exhaust gas treatment with SCR catalytic converter:												
Fill the reduction agent tank.	X											
Have the SCR system checked/ serviced.			X									KS; SW
Replace the filter insert for the reduction agent pump.				X							10.4.11	KS; SW
Compressor:												

KS = Contact KAESER SERVICE, SW = Contact specialised workshop, DEUTZ = Contact engine manufacturer DEUTZ

SCM = SIGMA CONTROL MOBIL controller

DPF = Diesel particulate filter; SCR = Selective Catalytic Reduction

PRELIMINARY Subject to Revision

Assembly: Task	Daily	A250	A500	A1000	A1500	A2000	A3000	A4000	A6000	A36000	See chapter	Note
Check the compressor air filter maintenance indicator.	X										10.5.7	
Check the cooling oil level.	X										10.5.1	
Clean the compressor air filter.		X									10.5.7	
Clean the compressor oil cooler.		X									10.6	
Check/clean the oil separator tank dirt trap(*).			X								10.5.5	
Change the compressor air filter.				X							10.5.7	
Change the cooling oil.				X							10.5.3	
Change the compressor oil filter.				X							10.5.4	
Change the oil separator cartridge in the oil separator tank.						X					10.5.6	
Safety functions:												
Check the EMERGENCY STOP device.	X										10.10.1	
Check the EMERGENCY STOP device for correct functioning.			X									KS; SW
Have the safety valve(s) checked.			X								10.10.2	KS
Have the function of the safety shut-down at excessive temperature checked.			X								10.10.3	KS
Bodywork/chassis:												
Check all screw connections, hinges, locks, handles and snap fasteners of the doors for wear and secure seat.		X										
Clean the gas struts of the wing doors and check for correct functioning.			X									KS
Check sound insulation material.		X									10.8	KS
Grease the door hinges.			X									
Service rubber sealing strips.			X								10.9	
Have lifting eye and fixings checked.			X									KS; SW

KS = Contact KAESER SERVICE, SW = Contact specialised workshop, DEUTZ = Contact engine manufacturer DEUTZ

SCM = SIGMA CONTROL MOBIL controller

DPF = Diesel particulate filter; SCR = Selective Catalytic Reduction

PRELIMINARY Subject to Revision

Assembly: Task	Daily	A250	A500	A1000	A1500	A2000	A3000	A4000	A6000	A36000	See chapter	Note
Pipes and hose lines (fuel hoses, pressure hoses):												
Check all pipes and hose lines of machine for proper seating, leaks and wear; have them replaced if necessary.			X								10.7	KS; SW
Have the fuel lines of the drive engine replaced.										X	10.7.1	KS; SW
Have the pressure hoses of the drive engine replaced.										X	10.7.2	KS; SW
Have the pressure hoses of the compressor replaced.										X	10.7.3	KS; SW
Other maintenance tasks:												
Check all accessible screw fittings, conduits and clamps of machine for wear and tightness.			X									
Check that all electrical connections are tight.			X									

KS = Contact KAESER SERVICE, SW = Contact specialised workshop, DEUTZ = Contact engine manufacturer DEUTZ

SCM = SIGMA CONTROL MOBIL controller

DPF = Diesel particulate filter; SCR = Selective Catalytic Reduction

Tab. 81 Regular machine maintenance tasks

10.3.3.2 Maintenance schedule for options

➤ Perform maintenance tasks according to the following schedule:

The maintenance work marked with (*) in the tables must additionally be carried out every 6 months if the annual operational performance is more than 500 operational hours.

Option: Task	Daily	A250	A500	See chapter	Note
Option da, df, dc, dd – Centrifugal separator:					
Check the condensate level in the transparent collection chamber, empty if necessary.	X			8.4.4	

EL = qualified electrician

KS = Contact KAESER SERVICE; SW = Contact specialised workshop

PRELIMINARY Subject to Revision

Option: Task	Daily	A250	A500	See chapter	Note
Check that the condensate drain pipe is securely fastened to the condensate collection tank.	X			10.11.1.1	
Clean and check the dirt trap (*).			X	10.11.1	
Options da, df, dc, dd – compressed air aftercooler:					
Clean the cooler.		X		10.6.2	
Option dd – Filter combination:					
Drain condensate.	X			10.11.2	
Change the filter elements (*).			X	10.11.2	
Option dc – Fresh air filter:					
Drain condensate.	X			10.11.3	
Check the oil level indicator.	X			10.11.3	
Change the filter elements (*).			X	10.11.3	
Option bb/od – Auxiliary electric devices:					
Coolant pre-heating; have the battery charger for start/stop automatic + connection line checked.			X		EL KS; SW
Option lb - Engine air intake shut-off valve:					
Clean/check the engine air shut-off valve.		X		10.11.4	
Option oe – Closed floor pan:					
Check the machine interior for liquid accumulations and drain, if required.	X			10.11.5	
EL = qualified electrician KS = Contact KAESER SERVICE; SW = Contact specialised workshop					

Tab. 82 Regular maintenance task options

10.4 Engine maintenance

➢ Perform maintenance tasks according to the schedule in chapter 10.3.3.1.

PRELIMINARY Subject to Revision

10.4.1 Maintaining the coolant cooler

Material
Coolant
Coolant tester
Receptacle
Funnel
Cleaning cloth

Precondition
The machine is switched off.
The machine is standing level.
The machine is fully vented, the pressure gauge reads 0 psig.
The machine has cooled down.
All compressed air consumers are disconnected and the air outlet valves are open.

⚠ WARNING

Danger of scalding from hot coolant!
Serious injuries can be caused by hot coolant.

➤ *Let the machine cool down before opening the cooling system.*

⚠ CAUTION

Risk of chemical burns from coolant containing antifreeze!

➤ *Avoid eye and skin contact with coolant. If the eyes are affected, rinse immediately with running water.*

➤ *Wear protective glasses and gloves.*

NOTICE

Insufficient coolant can damage the machine!
Insufficient coolant will cause the engine to overheat. Overheating can cause serious damage to the engine.

➤ *Check the coolant level daily.*

➤ *Top up the coolant as necessary.*

➤ Open the left-hand door.

10.4.1.1 Checking coolant level

The coolant level in the engine cooling circuit must be checked daily prior to start-up.
The level is checked on the coolant expansion tank:

- The tank is semi-transparent so the coolant level can be seen from outside.
- The level should be between the *minimum and maximum markings* when the engine has cooled down.

PRELIMINARY
Subject to Revision

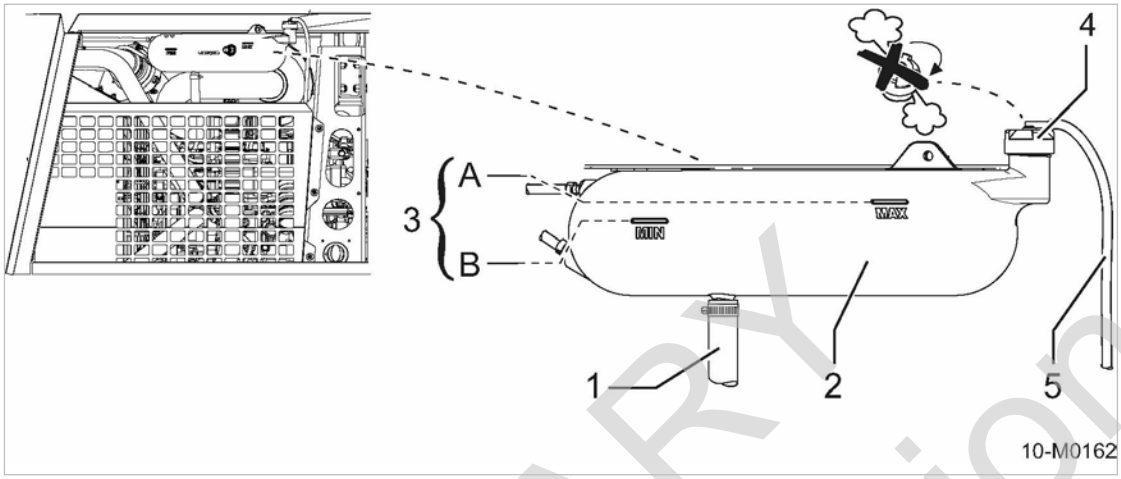

Fig. 34 Checking coolant level

1	Cooler connection hose	B	*Minimum mark* (LOW)
2	Coolant expansion tank	4	Filler neck with cap
3	Coolant level	5	Overflow
A	*Maximum mark* (FULL)		

1. Check the level of coolant in the expansion tank.
   Top up when the coolant level falls below the *minimum check mark* (B): Replenish the coolant.
2. Close the door.

Have the cause for the coolant loss determined and rectified.

10.4.1.2 Checking the coolant

The coolant should be checked according to the maintenance schedule to ensure quality and operational life.

Coolant quality can be determined by the following parameters:

- Visual check
- Antifreeze concentration measuring

➤ Unscrew and remove the expansion tank filler cap (1).

Perform visual check:

The coolant should be checked for its colour and any particles or sediments floating in it.

➤ Take a coolant sample and analyse.
The coolant is badly discoloured and/or contains floating particles: Change the coolant.

Perform antifreeze concentration measuring:

An instrument (e.g. refractometer) is used to check the antifreeze concentration of the coolant.

Maximum frost protection is ensured with an antifreeze concentration of 55% volume, as frost protection and heat transfer properties deteriorate beyond this point. Higher concentrations also lead to higher operating temperature.

PRELIMINARY Subject to Revision

1. **NOTICE** *The engine can be damaged if the antifreeze concentration is insufficient.*
   Corrosion.
   Damage to the cooling system.
   Engine casing fracture.
   - ➤ *Check coolant.*
   - ➤ *Protect the coolant against freezing.*
   - ➤ *Top up immediately if necessary.*
2. Use the coolant tester as instructed by the manufacturer to test the coolant.
   Concentration of antifreeze is too low: Change the coolant.

Performing final work steps:

1. Screw the cover back on again.
2. Close the door.

10.4.1.3 Mixing coolant

Never use water without coolant additive. Water alone is corrosive at engine operating temperature. Water alone does not offer sufficient protection from boiling or freezing.

The coolant is a mixture of clean, fresh water and antifreeze with corrosion inhibitor.

For reasons of corrosion protection and the need to raise the boiling point, the coolant must remain in the cooling system throughout the year.
The maximum permissible coolant life is 3 years.

➤ Follow coolant recommendations in chapter 2.7.5!

Preparing coolant:

Precondition Coolant must meet the DEUTZ coolant specification DQC CC-14.

➤ The coolant should be mixed in the ratio specified by the manufacturer.

Coolant mixture table:

Percentages [% vol.]		Frost protection up to approx. [°F]
Corrosion inhibitor/anti-freeze	Water	
50	50	–34.6

Tab. 83 Coolant mixture table

Do not use a higher concentration than 55% vol. of corrosion inhibitor/antifreeze even in extremely low ambient temperatures. The maximum frost protection is reached with 55% of corrosion inhibitor/antifreeze. This corresponds to frost protection to approx. –49 °F.

The concentration of antifreeze should not be less than 33% since corrosion protection can no longer be guaranteed and heat transfer properties deteriorate beyond this point!

10.4.1.4 Filling and topping up the coolant

The percentage of antifreeze in the coolant should not fall below 33% to ensure optimal frost and corrosion protection and prevent the build-up of deposits (sludge) in the cooling circuit. Topping up with water alone dilutes the antifreeze concentration and is forbidden.

PRELIMINARY Subject to Revision

Make sure that there is sufficient room for hot coolant to expand without overflowing.

Precondition Negative cable to the batteries disconnected.

1. Twist and remove the expansion tank filler cap.
2. Mix a quantity of coolant according to the table and replenish to the mark.
   Replenish the coolant just below the *maximum mark* (A).
3. Screw on the filler cap.
4. Reconnect the negative cable to the batteries.
5. Close the door.
6. Start the engine and allow to IDLE for about 1 minute.
7. Stop the engine.
8. Open the right-hand access door.
9. Check the coolant level.
   If the coolant level in the coolant expansion tank has decreased: Top up the coolant.
10. Visually inspect for leaks.
11. Close the door.

10.4.1.5 Draining the coolant

Precondition The machine has cooled down.
Negative cable to the batteries is disconnected.

Draining the coolant (machine with chassis)

The drain points for the lubricating and cooling fluids of engine and compressor are led to the outside. Coolant is drained via a hose screwed into the cooler drain point. At the drain side, the hose is closed with a shut-off valve and sealed with a plug.

See chapter 4, Fig. 9 for the location of the drain points for lubricant and coolant in the floor pan.

PRELIMINARY
Subject to Revision

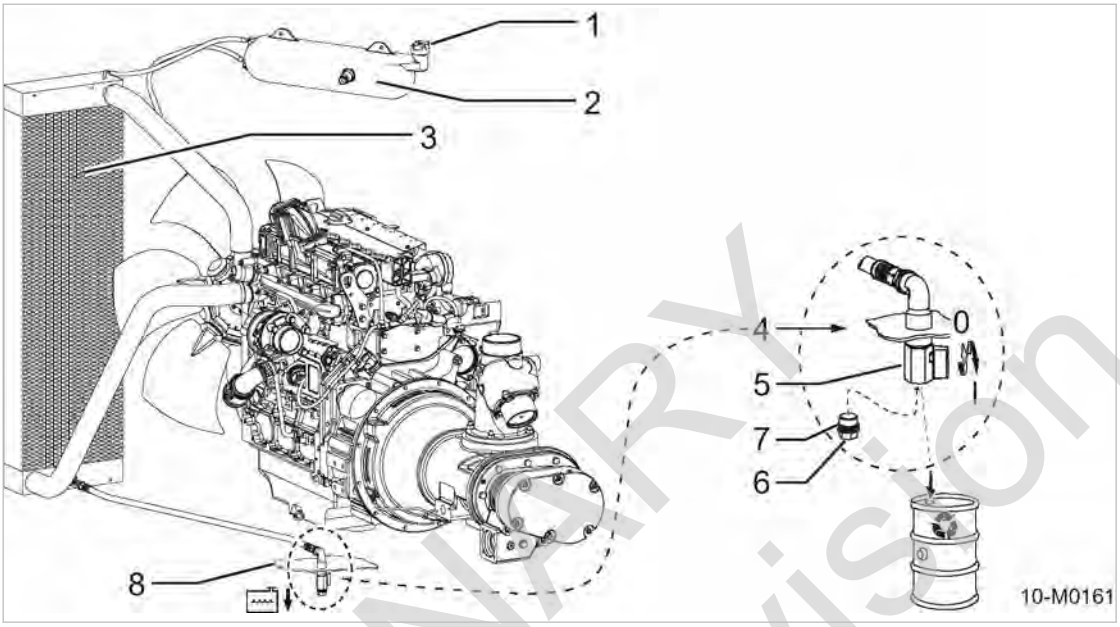

Fig. 35 Draining the coolant from the engine coolant cooler

1	Filler cap	5	Shut-off valve (ball valve) I - Open 0 - Closed
2	Coolant expansion tank	6	Coolant drain screw plug
3	Coolant cooler	7	Sealing ring
4	Coolant drain coolant cooler	8	Floor pan

1. Unscrew and remove the expansion tank filler cap 1.
2. Position a receptacle beneath the coolant drain of the coolant cooler (beneath the floor pan).
3. Unscrew the filler plug 6 at the coolant drain.
4. Open the shut-off valve 5 at the cooling oil drain and catch the escaping cooling oil.
5. Close the shut-off valve.
6. Check the sealing ring 7 of the filler plug.
   The sealing ring is deformed or defective: Replace the sealing ring.
7. Screw in the plug.
8. Replace the plug in the filler neck.
9. Close the door.

Option oe, rw, rx **Draining the coolant (closed floor pan/stationary machine):**

Compressor cooling oil and engine coolant drain lines are led to a central point outside the machine on stationary machines and machines with closed floor pan. Coolant is drained using a combination of hose and pipe lines screwed into the drain port of the cooler. At the drain side, the pipeline is closed with a shut-off valve and sealed a plug.

PRELIMINARY Subject to Revision

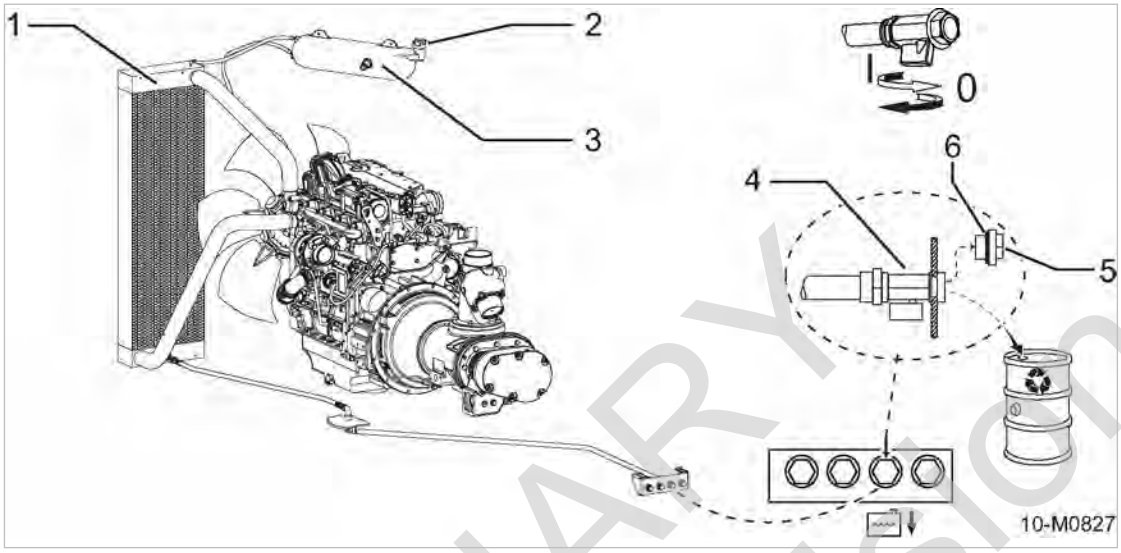

Fig. 36 Draining the coolant from the engine coolant cooler (closed floor pan/stationary machine)

1 Coolant cooler
2 Filler cap
3 Coolant expansion tank
4 Shut-off valve (ball valve)
I - Open
0 - Closed
5 Coolant drain screw plug
6 Sealing ring

1. Unscrew and remove the expansion tank filler cap 2.
2. Place a receptacle beneath the drainage location of the coolant cooler.
3. Unscrew the screw plug 5 at the coolant drain.
4. Open the corresponding shut-off valve 4 at the cooling oil drain and catch the cooling oil.
5. Close the shut-off valve.
6. Check the sealing ring 6 of the filler plug.
   The sealing ring is deformed or defective: Replace the sealing ring.
7. Screw in the plug.
8. Replace the plug in the filler neck.
9. Close the door.

➤ Dispose of used coolant in accordance with environmental protection regulations.

Removing scaling within the coolant cooler

After extended periods of use, scale may form in the cooling circuit and within the coolant cooler in particular. Due to the resulting poorer heat transfer, the engine may overheat.

1. **NOTICE** *Scaling in the cooling circuit!*
   Damage caused by engine overheating.
   ➤ *Use cooler cleaning agent to remove scaling in the coolant cooler.*
2. Read and follow the manufacturer's instructions regarding the use of cooler cleaning agent.
3. After draining the coolant, use a coolant cleaning agent to descale the water cooler.

PRELIMINARY Subject to Revision

10.4.2 Engine air filter maintenance

Clean the filter according to the maintenance schedule or if the maintenance indicator shows this to be necessary.

Renew the air filter element after 2 years or after it has been cleaned 5 times.

- Operating the engine without an air filter element is not permitted!
- Do not use a filter element with damaged folds or gasket.
- The use of an unsuitable air filter can permit dirt to enter the engine and cause premature wear and damage.

Material
Compressed air for blowing out
Spare parts (as required)
Cleaning cloth

Precondition
The machine is switched off.
The machine is fully vented, the pressure gauge reads 0 psig.
The machine has cooled down.
All compressed air consumers are disconnected and the air outlet valves are open.

NOTICE

Damaged air filter element.
Wear in the engine from intake of contaminated air.

➤ *Do not try to clean the filter element by striking or knocking it.*
➤ *Do not wash the filter element.*

Analyzing the warning message on the controller

The air filter is connected by a sensor to the controller. The controller returns a warning message with rising degree of contamination in the air filter.

- The controller display will show "Service engine air filter".
- The «Information» key illuminates.
- The «Acknowledge» key flashes.

If this warning message triggers, maintenance of the engine air filter is required.

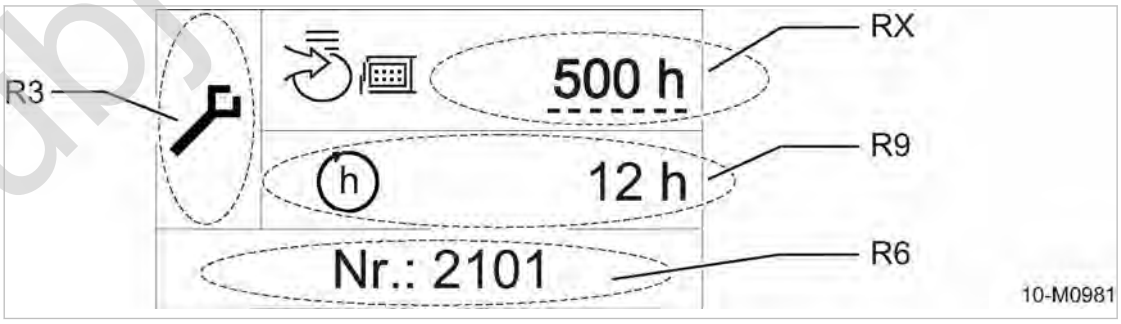

Fig. 37 Warning messages: Air filter engine intake maintenance

R3 Event memory category: Maintenance
R6 Message codes
R9 Time when maintenance is due.
RX Maintenance interval

PRELIMINARY Subject to Revision

➤ Maintain the filter.

➤ Open the right-hand access door.

Cleaning the air filter

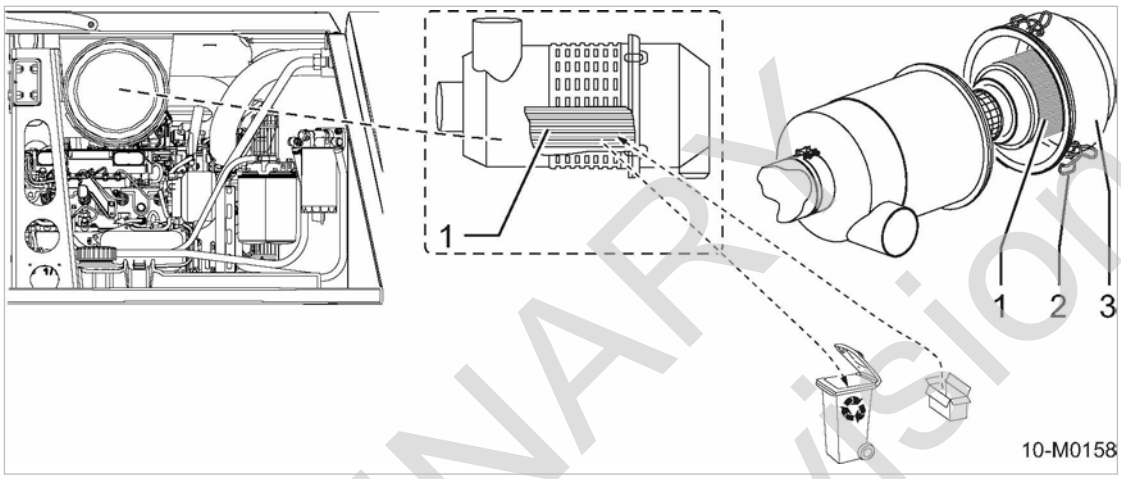

Fig. 38 Engine air filter maintenance

1 Filter element (air filter)
2 Retaining clip
3 Filter cap

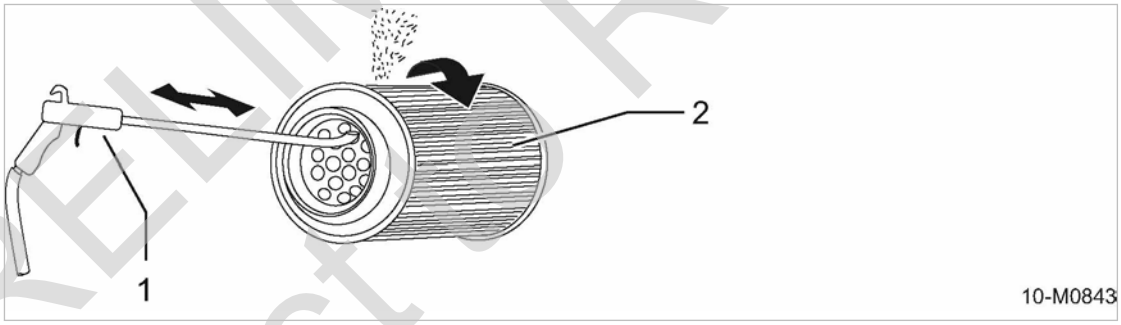

Fig. 39 Clean the filter element (air filter)

1 Compressed air gun with blast pipe bent to 90° at the end
2 Filter element (air filter)

1. Release the retaining clamps, lift off the cap an extract the air filter.
2. Carefully clean the inside of the housing, the cover and sealing faces with a damp cloth.
3. Cleaning the filter element:
   - Use dry compressed air (≤ 30 psig!) at an angle to blow dust from the element from inside to outside until no further dust develops.
   - The blast pipe must be long enough to reach the bottom of the element.
   - The tip of the blast pipe must not touch the element.
   - Cleaning sealing faces.
4. Inspect the element carefully for any damage.
   Damaged filter element: Replace filter element.

PRELIMINARY
Subject to Revision

5. Insert the cleaned or new filter element into the filter housing. Make sure it is properly in place and sealed by its gaskets.
6. Replace the cap and secure with the clip.

Concluding the maintenance

Maintenance must be acknowledged after the air filter has been maintained.

For more information about acknowledging the maintenance message and resetting the maintenance timer, see the separate operating manual of the SIGMA CONTROL MOBIL

Precondition Air filter maintained

1. Acknowledge the maintenance message.
   - Confirm the message with the «Acknowledge» key.
   - The «Acknowledge» key is extinguished but the «Information» key is still illuminated.
2. Resetting the maintenance interval counter.
   - Simultaneously press and hold the «Acknowledge» and «Enter» keys for 2 seconds.
   - The system will automatically display the input menu for the password if no password is active.
   - Password (for example: Customer password: 4512) enter and confirm with the keypad.
   - Simultaneously press and hold the «Acknowledge» key and «Enter» for 2 seconds.

Result The maintenance interval counter is reset and the «Information» key extinguishes.

➤ Close the door.

Dispose of old parts and contaminated materials according to environmental regulations.

10.4.3 Fuel system maintenance

Make sure no dirt enters the fuel system during maintenance. Clean components and their surroundings before dismounting.

Material Spare parts
Collecting vessel
Cleaning cloth

Precondition The machine is switched off.
The machine is standing level.
The machine is fully vented, the pressure gauge reads 0 psig.
The machine has cooled down.
All compressed air consumers are disconnected and the air outlet valves are open.
Negative cable to the batteries disconnected.

PRELIMINARY Subject to Revision

⚠ DANGER

Danger of fire from spontaneous ignition of fuel!
Serious injury or death could result from the ignition and combustion of fuel.

- ➤ *Allow no open flames or sparks at the place of use.*
- ➤ *Ensure that the maximum ambient temperature is not exceeded at the place of use.*
- ➤ *Shut down the engine.*
- ➤ *Wipe up escaped fuel.*
- ➤ *Keep fuel away from hot machine parts.*

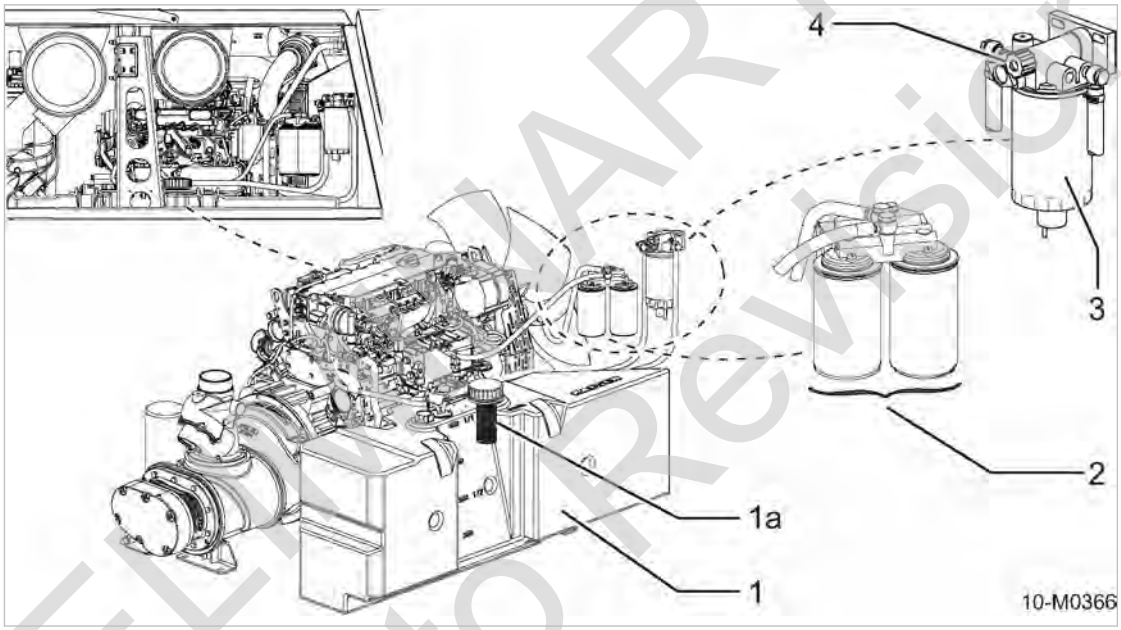

Fig. 40 Service fuel system

1	Fuel tank	3	Fuel prefilter with integrated water separator
1a	Fuel strainer	4	Manual fuel pump
2	Fuel filter		

➤ Open the right-hand access door.

10.4.3.1 Bleeding the fuel system

Air can enter the fuel system if the fuel tank is empty after a fuel filter change or when carrying out work on the fuel lines.
If the engine refuses to start despite a full tank, bleed the fuel system.

PRELIMINARY
Subject to Revision

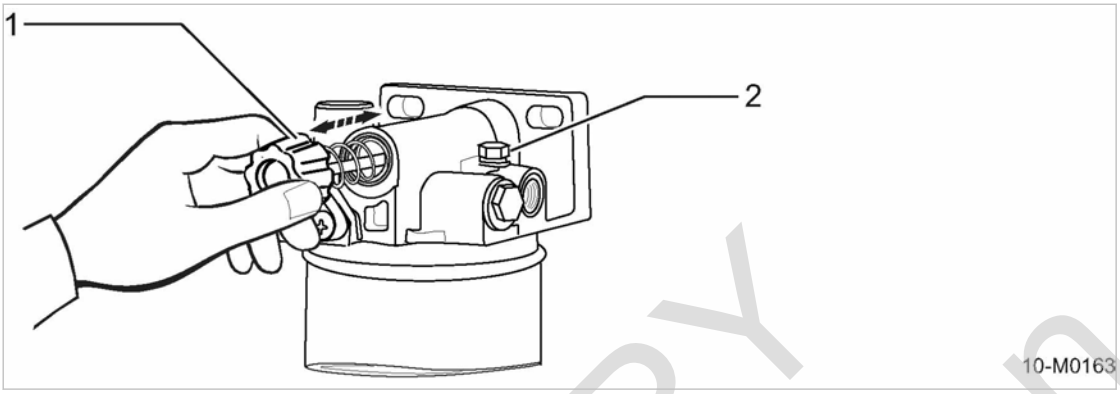

Fig. 41 Bleeding the fuel system

1 Manual fuel pump
2 Open bleed screw

1. Place a receptacle beneath the fuel pre-filter housing.
2. Open the bleed screw at the filter head.
3. Unlatch the manual fuel pump bayonet lock by pressing and turning anti-clockwise.
   The pump piston is pushed out by the spring.
4. Actuate the manual fuel pump until the bleed screw does no longer emit air bubbles.
5. Close the bleed screw at the filter head.
6. Continue to actuate the manual pump until high resistance is felt and pumping is very slow.
7. Keep pumping until the return line is filled.
8. Latch the manual fuel pump bayonet lock by pressing and turning clockwise.
9. Reconnect the negative cable to the batteries.
10. Close the door.

Start the engine as soon as the fuel system has been bled and allow to run for at least 5 minutes in IDLE mode.

11. Open the right-hand access door.
12. Visually check the fuel system for leaks. If required, re-tighten all screw connections.
13. Close the door.

10.4.3.2 Fuel pre-filter maintenance

Emptying the fuel water separator:

The fuel pre-filter is equipped with an integrated water separator. Contaminants in the water are trapped in the water receptacle of the filter cartridge.

The water separator is connected by a sensor to the controller. If the water in the separator reaches a set level, the controller displays a warning.

- The display indicates water in the fuel filter by returning *Fuel filter water level*.
- The «Information» key illuminates.
- The «Acknowledgement» key flashes.

The water separator must be emptied when this warning is given.

PRELIMINARY Subject to Revision

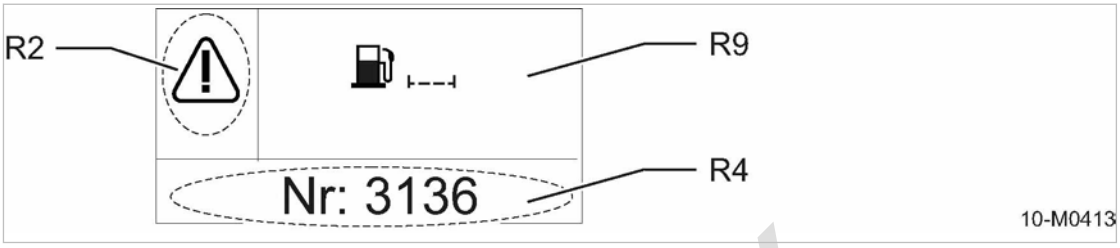

Fig. 42 Warning message: Fuel filter water level

- R2 Event memory category: Warning
- R4 Message codes
- R9 Fuel filter water level (fuel filter maintenance)

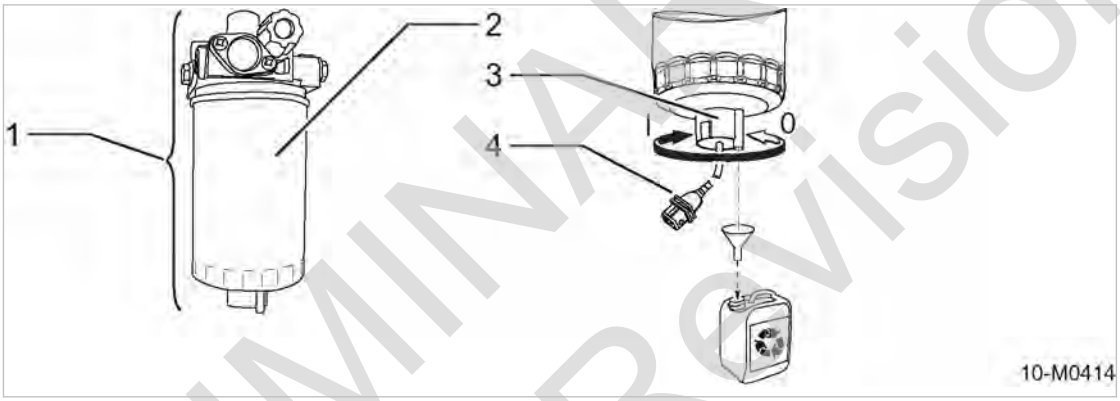

Fig. 43 Emptying the fuel pre-filter and water separator

- 1 Fuel prefilter
- 2 Filter cartridge with integrated water receptacle
- 3 Water draining stopper with integrated level sensor
  I - open
  0 - close
- 4 Level sensor connecting plug (fuel filter maintenance)

1. Place a receptacle beneath the fuel pre-filter housing.
2. Unscrew the draining stopper on the bottom of the filter cartridge (2 turns max.) and drain water and contamination.
3. Close the draining stopper.
4. Reconnect the negative cable to the batteries.
5. Close the door.

Maintenance must be acknowledged after the water separator has been emptied.

Precondition The water separator has been emptied.

➤ Confirm the maintenance with the «Acknowledgement» key.
The illuminated «Acknowledge» and «Information» keys are extinguished.

The mixture of fuel and water and any materials contaminated with fuel must be disposed of in accordance with environment protection regulations.

PRELIMINARY Subject to Revision

Changing the filter cartridge:

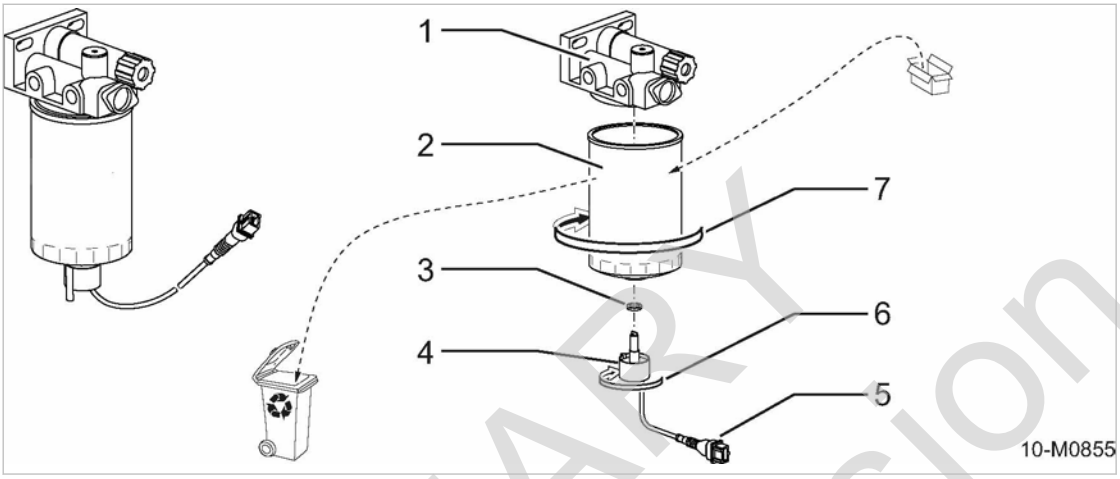

Fig. 44 Change the fuel prefilter cartridge

1. Filter head
2. Filter cartridge with integrated water receptacle
3. Draining stopper seal
4. Draining stopper with integrated level sensor
5. Water level sensor connecting plug (fuel filter maintenance)
6. Direction of rotation to unscrew the draining stopper.
7. Turn in this direction to unscrew the filter cartridge.

1. Place a receptacle beneath the fuel pre-filter housing.
2. Unscrew the draining stopper on the bottom of the filter cartridge (2 turns max.) and drain water and contamination.
3. Remove the connecting plug of the water level sensor.
4. Use a standard wrench to loosen and unscrew (counter-clockwise) the filter cartridge.
5. Empty any remaining fuel into a receptacle.
6. Unscrew the draining stopper of the filter cartridge and clean with lint-free cloth.
7. Check the seal of the draining stopper.
   Seal damaged: replace seal.
8. Screw the draining stopper to a new filter cartridge.
9. Clean the sealing faces of the filter cartridge and filter head with a lint-free cloth.
10. Mount the filter cartridge to the filter head:
    - Moisten the sealing faces of the new filter cartridge with some fuel.
    - Manually screw the filter cartridge to the filter head (clockwise), until seal is tight.
    - Continue to manually turn until the filter cartridge is seated tightly (½ to ¾ turn approximately).
11. Fasten the connecting plug of the water level sensor.
12. Reconnect the negative cable to the batteries.
13. Close the door.

The fuel system must be bled after the filter cartridge has been changed.

Dispose of fuel and any materials and components contaminated with it in accordance with environmental protection regulations.

PRELIMINARY Subject to Revision

10.4.3.3 Fuel filter maintenance

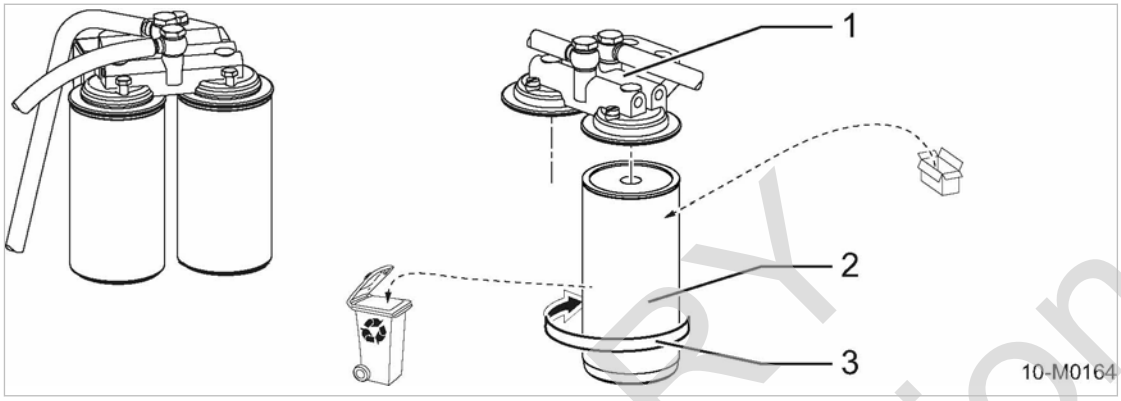

Fig. 45 Fuel filter maintenance

1 Filter holder
2 Filter cartridge
3 Direction of rotation to unscrew the filter cartridge

1. Place a receptacle beneath the housing of the fuel filter.
2. Use a filter wrench to loosen then unscrew the filter cartridges. Collect any escaping fuel.
3. Clean the sealing faces of the new filter cartridges and the opposing side of the filter holder with a lint-free cloth.
4. Mount the filter cartridges to the filter holder:
   - Moisten the rubber seals of the filter holder and the sealing faces of the new filter cartridges with some fuel.
   - Manually screw the filter cartridges to the filter holder (clockwise), until seals are tight.
   - Continue to manually turn until the filter cartridges are seated tightly (½ to ¾ turn approximately).
5. Reconnect the negative cable to the batteries.
6. Close the door.

The fuel system must be bled after the filter cartridges have been changed.

Dispose of fuel and any materials and components contaminated with it in accordance with environmental protection regulations.

Starting the machine and performing a test run:

1. Switch the machine on and run it in IDLE mode for approx. 1 minute.
2. Shut down the machine.
3. Open the right-hand access door.
4. Visually check the fuel system for leaks.
5. Tighten all screw connections.
6. Close the door.

10.4.4 Checking the engine oil level

The engine oil is indicated by a dipstick in the oil sump. The oil level should ideally be between the two marks on the dipstick. The oil level should not be allowed to fall below the *minimum level*.

PRELIMINARY Subject to Revision

Material Cleaning cloth

Precondition The machine is shut down.
The machine is standing level.
The machine is fully vented, the pressure gauge reads 0 psig.
Engine cooled down.
All compressed air consumers are disconnected and the air outlet valves are open.

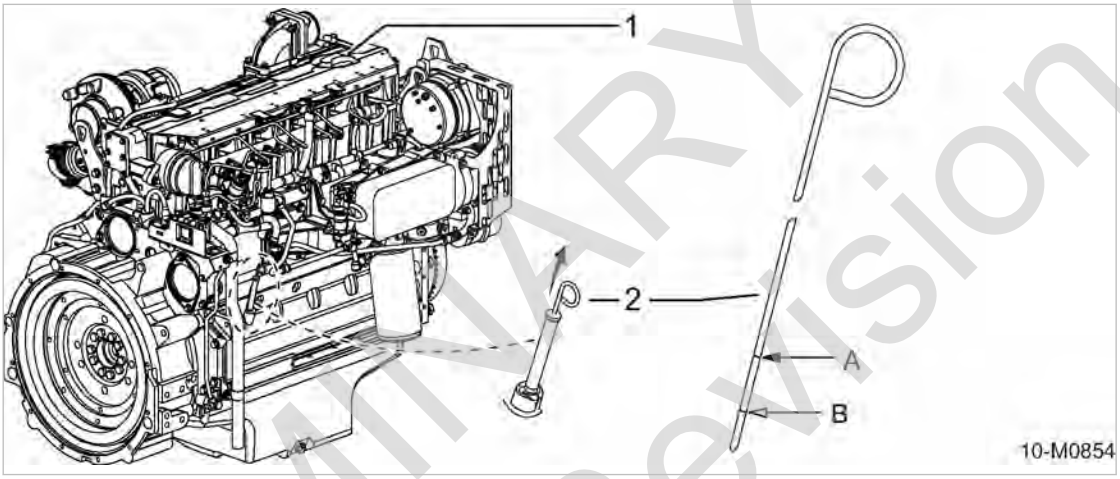

Fig. 46 Checking the engine oil level

1 Engine oil filler cap
2 Oil dipstick
A Mark for *maximum oil level*
B Mark for *minimum oil level*

1. Open the right-hand access door.
2. Withdraw the dipstick, wipe with a lint-free cloth and replace fully.
3. Withdraw the dipstick once more and read off the oil level.
   The level should be between the maximum and minimum markings.
   Top up if the level has reached or fallen below the *minimum level* mark.
4. Close the access door.

The marked *maximum oil level* should not be exceeded in order for the level of oil in the crankcase not to reach the crankshaft. If this occurs, it could create oil bubbles that would reduce the oil's lubricating capability and impair engine performance.

10.4.5 Engine oil filling and topping off

Material Engine oil
Cleaning cloth
Funnel

Precondition The machine is switched off.
The machine is standing level.
The machine is fully vented, the pressure gauge reads 0 psig.
All compressed air consumers are disconnected and the air outlet valves are open.
Negative cable to the batteries disconnected.

PRELIMINARY Subject to Revision

Filling with engine oil

See chapter 2.7.7 for the engine oil filling quantity.
The oil dipstick is marked with the *maximum oil level*.

1. Open the right-hand access door.
2. Remove the filler cap and fill with fresh oil.
3. Wait 5 minutes then check the oil level.

It takes a few minutes for oil to reach the sump.

Low oil level: Replenish engine oil.

4. Replace the plug in the filler port.
5. Reconnect the negative cable to the batteries.
6. Close the door.

Starting the machine and performing a test run

1. Switch the machine on and run it in IDLE mode for approx. 5 minutes.
2. Shut down the machine.
3. Wait until the machine has automatically vented.
   Pressure gauge reads 0 psig!
4. Open the right-hand access door.
5. After approximately 5 minutes: Check the engine oil level.
   Low oil level: Replenish engine oil.
6. Visually inspect for leaks.
7. Close the door.

10.4.6 Changing the engine oil

The engine oil should be changed:

- according to the maintenance schedule,
- according to the degree of contamination of the intake air,
- at least once a year.

Material
Engine oil
Receptacle
Wrench
Cleaning cloth

Precondition
The machine is switched off.
The machine is standing level.
The machine is fully vented, the pressure gauge reads 0 psig.
the engine is at operating temperature.
All compressed air consumers are disconnected and the air outlet valves are open.
Negative cable to the batteries disconnected.

PRELIMINARY
Subject to Revision

⚠ CAUTION

Danger of burns from hot components and escaping engine oil!

➤ *Wear long-sleeved clothing and protective gloves.*

Draining the engine oil (machines with chassis)

The drain points for the lubricating and cooling fluids of engine and compressor are led to the outside. The engine oil is drained via a hose which is screwed into the drain opening of the engine block and closed with a shut-off valve. At the drain side, the hose is closed with a shut-off valve and sealed with a plug.

See chapter 4, Fig. 9 for the location of the drain points for lubricant and coolant in the floor pan.

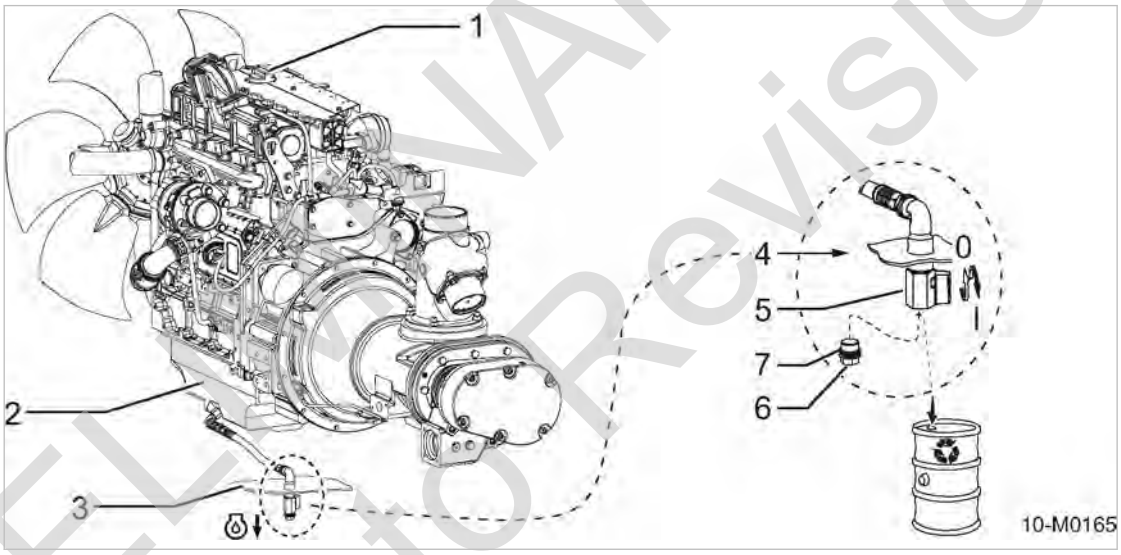

Fig. 47 Draining the engine oil

1. Oil filler neck cover, engine oil
2. Engine oil sump
3. Floor pan
4. Engine oil drain
5. Shut-off valve (ball valve)
   I - Open
   0 - Closed
6. Screwed sealing cap - engine oil drain
7. Sealing ring

1. Open the right-hand access door.
2. Remove the oil filler cap 1.
3. Prepare a receptacle beneath the engine oil drain (beneath the floor pan).
4. Unscrew the filler plug 6 at the coolant drain.
5. Open the shut-off valve 5 at the engine oil drain and catch the escaping oil.
6. Close the shut-off valve.
7. Check the sealing ring 7 of the filler plug.
   The sealing ring is deformed or defective: Replace the sealing ring.
8. Screw in the plug.
9. Replace the plug in the filler port.
10. Close the door.

PRELIMINARY Subject to Revision

Option oe, rw, rx **Draining the engine oil (closed floor pan - stationary machine)**

Compressor cooling oil and engine coolant drain lines are led to a central point outside the machine on stationary machines and machines with closed floor pan. Oil is drained via a combination of hose and pipeline screwed into the engine block's drain point. At the drain side, the pipeline is closed with a shut-off valve and sealed a plug.

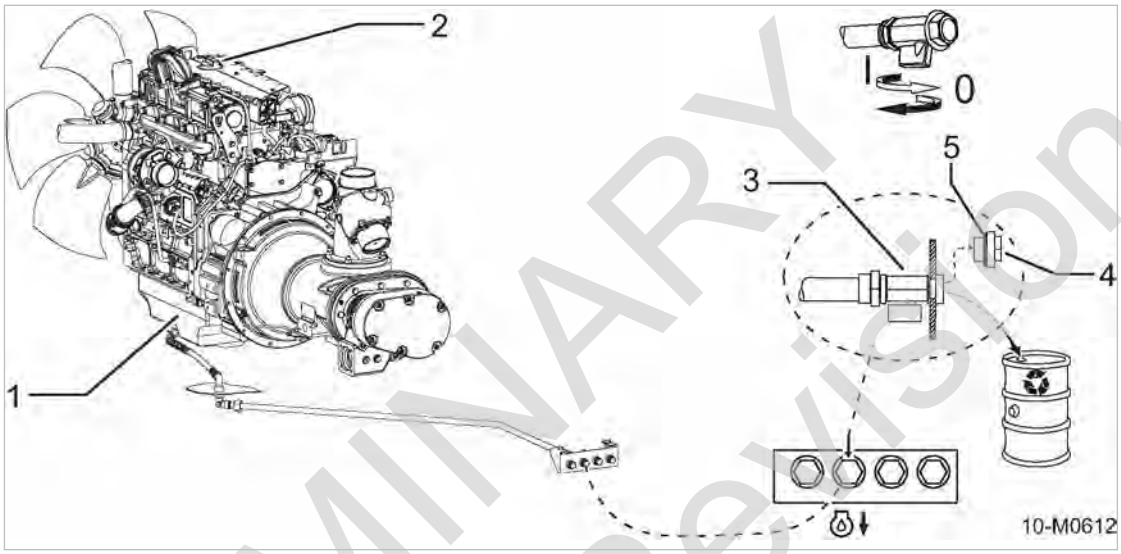

Fig. 48 Draining the engine oil (closed floor pan - stationary machine)

1. Engine oil sump
2. Oil filler neck cover, engine oil
3. Shut-off valve (ball valve)
   I - Open
   0 - Closed
4. Screwed sealing cap - engine oil drain
5. Sealing ring

1. Open the right-hand access door.
2. Remove the oil filler cover.
3. Position a receptacle beneath the drainage location of the engine oil.
4. Unscrew the filler plug 4 at the oil drain.
5. Open the shut-off valve 3 at the motor oil drain and catch the oil.
6. Close the shut-off valve.
7. Check the sealing ring 5 of the filler plug.
   The sealing ring is deformed or defective: Replace the sealing ring.
8. Screw in the plug.
9. Replace the plug in the filler port.
10. Close the door.

Dispose of old oil and oil-soaked working materials according to environmental protection regulations.

Further information See chapter 10.4.5 for engine oil filling.

PRELIMINARY Subject to Revision

10.4.7 Replacing the engine oil filter

Material
Spare part
Strap wrench (Purchase order number 8.9410.0)
Cleaning cloth
Receptacle

Precondition
The machine is switched off.
the machine is fully vented, the pressure gauge reads 0 psig.
the engine is cooled down.
All compressed air consumers are disconnected and the air outlet valves are open.
Negative cable to the batteries disconnected.

⚠ CAUTION

Danger of burns from hot components and escaping engine oil!

➤ *Wear long-sleeved clothing and gloves.*

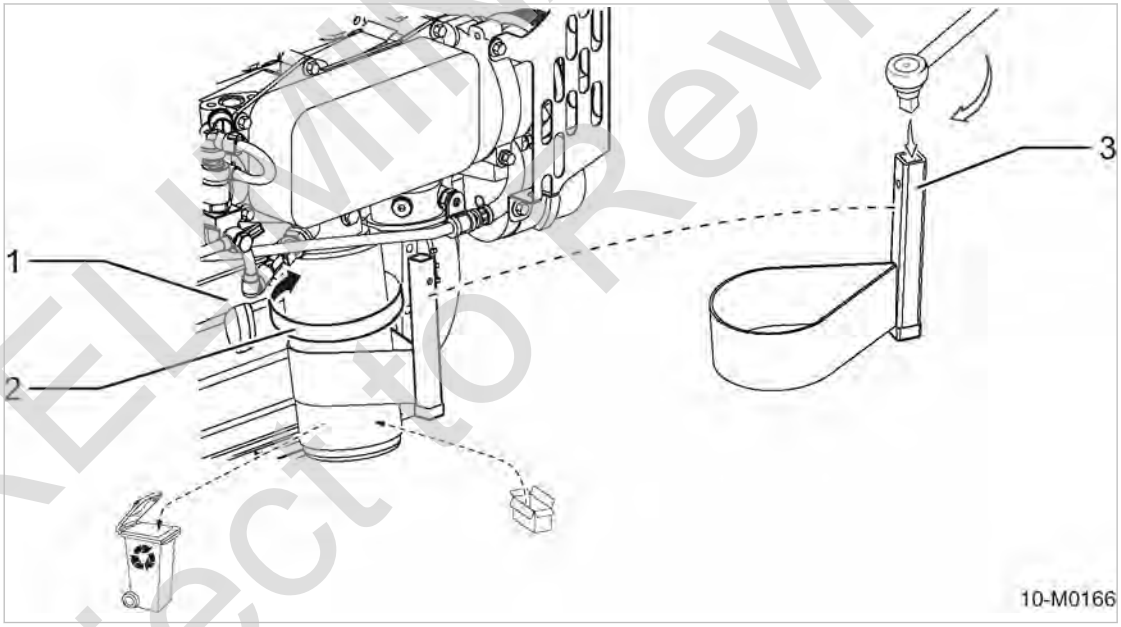

Fig. 49 Change the oil filter

1 Engine
2 Direction of rotation to unscrew the filter
3 Strap wrench

Due to restricted space, a strap wrench should be used to unscrew the oil filter. The strap wrench is operated with a 1/2” ratchet.

1. Open the right-hand access door.
2. Prepare a receptacle.
3. Loosen the filter with the strap wrench and unscrew. Catch any escaping engine oil.
4. Carefully clean sealing surfaces using lint-free cloth.
5. Lightly oil the new filter's gasket.
6. Turn the oil filter clockwise by hand to tighten.

PRELIMINARY
Subject to Revision

7. Check the engine oil level.
   Low oil level: Replenish engine oil.
8. Reconnect the negative cable to the batteries.
9. Close the door.

Dispose of old oil filter, old oil and materials contaminated with oil according to applicable environmental protection regulations.

10.4.8 Drive belt maintenance

The life of the drive belts is influenced by belt tension.

- Slack belts can slip and become damaged and may result in engine overheating.
- Over-tight belts cause excessive strain and, hence, a reduction of the service life. Over-tight belts also place unnecessary stress on bearings and shorten their life.

Material
Ratchet
Locking pin
V-belt tension measuring device
Spare part

Precondition
The machine is switched off.
The machine is fully vented, the pressure gauge reads 0 psig.
The machine has cooled down.
All compressed air consumers are disconnected and the air outlet valves are open.
Negative cable to the batteries disconnected.

⚠ WARNING

Beware of rotating pulleys and moving belts!
There is danger of serious injury from pinching.

➤ *Never check the drive belt unless the engine is at standstill.*
➤ *Never operate the machine without a belt guard.*

➤ Open both doors.

PRELIMINARY Subject to Revision

Removing the belt guard

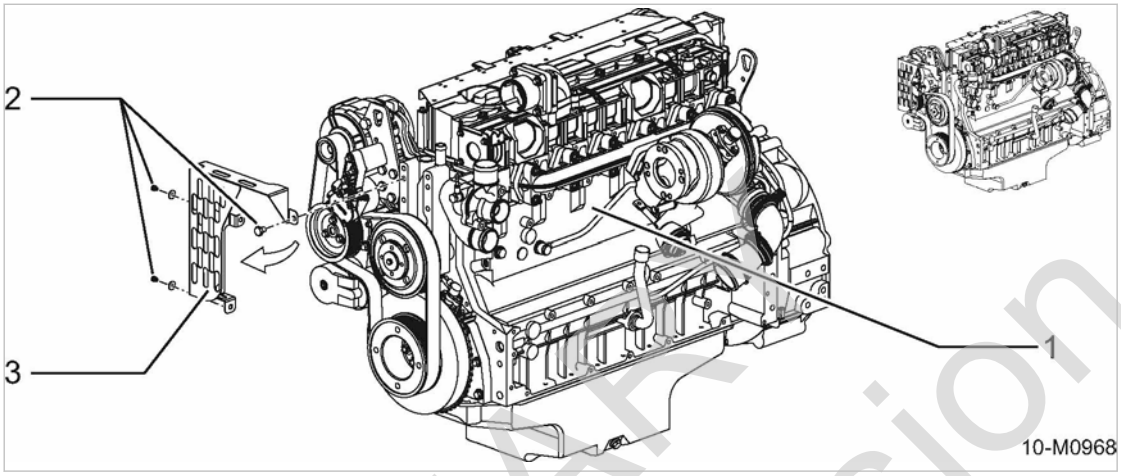

Fig. 50 Belt guard attachment

1 Engine
2 Hexagon screws (belt guard attachment)
3 Belt guard

➤ Unscrew the securing screws of the belt guard and remove the belt guard.

10.4.8.1 Carry out visual inspection

1. Check the belt thoroughly for cracks, fraying or stretching.
   When damaged or worn: Replace the drive belt immediately.
2. Replace the belt guard.
3. Reconnect the negative cable to the batteries.
4. Close the doors.

10.4.8.2 Checking belt tension

Check belt tensions only when they are warm, not hot, to avoid length differences due to temperature differences.

The engine manufacturer recommends a tension measuring device for belts.

The belt tension may also be checked by hand if no tension measuring device is available.

PRELIMINARY
Subject to Revision

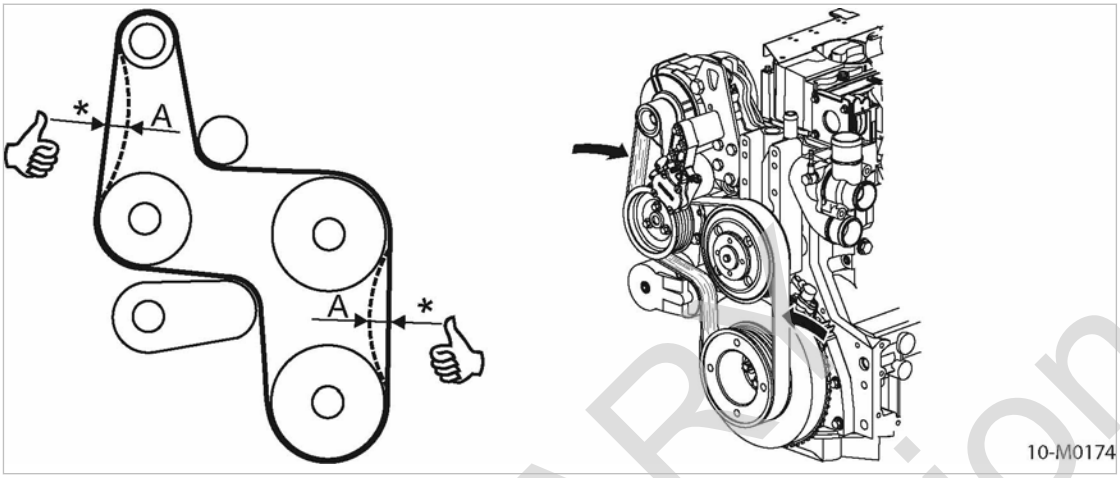

Fig. 51 Manually checking the belt tension

(A) Drive belt testing position
(*) - Compressive load approximately: 22 lb
- Play approximately: 0.4 – 0.6 in

Checking belt tension with tension measuring device	Belt tension checking by hand
1. Check belt tension with the tension measuring device. 2. Increase the tension on a loose belt.	Press the belts in with the thumb at the mid-point between pulleys. 1. Check belt tension by hand (see Fig. 51). 2. Increase the tension on a loose belt.

Putting in operation

1. Replace the belt guard.
2. Reconnect the negative cable to the batteries.
3. Close the doors.

10.4.8.3 Changing/tensioning the drive belt

The drive belt is pre-tensioned by the spring force in the jockey wheel. By turning the jockey wheel you can adjust the belt tension.

PRELIMINARY
Subject to Revision

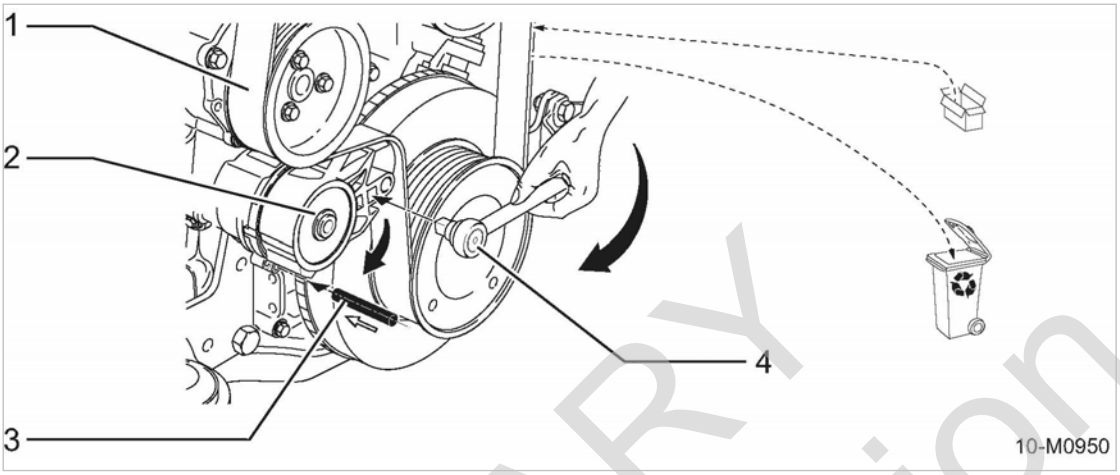

Fig. 52 Changing/tensioning the drive belt

1 Drive belt
2 Tension pulley
3 Locking pin
4 Ratchet

Tensioning the drive belt

1. Insert the ratchet square in the corresponding hole in the jockey wheel.
2. Using the ratchet, press the jockey wheel opposite the arrow direction. Ensure that the drive belt is correctly positioned in its guide.
3. Check the belt tension (see Fig. 51).

   Belt tension too low: Using the ratchet, further press the jockey wheel opposite the arrow direction.
   Belt tension too high: Using the ratchet, slightly press the jockey wheel in arrow direction.

Replace the drive belt

1. Insert the ratchet square in the corresponding hole in the jockey wheel.
2. Using the ratchet, press the jockey wheel in arrow direction until the locking pin can be fastened in the mounting hole.
3. Insert locking pin in mounting hole.

   The drive belt is free of tension.
4. Pull the drive belt first off the smallest or the jockey wheel.
5. Check the pulleys for dirt and wear.

   Dirty pulley: Clean pulley.
   Worn pulley: Have the pulley changed.
6. Manually route the new drive belt over the pulleys without using force.
7. Hold up the jockey wheel with the ratchet and remove the locking pin.

   The jockey wheel is pushed upwards by spring tension and pre-tensions the drive belt.
8. Tension the drive belt. Ensure that the drive belt is correctly positioned in its guide.

A belt that has been replaced may not be used again.
Check the belt tension after running for approximately 15 minutes.

Old belts should be disposed of in accordance with the latest environmental regulations.

PRELIMINARY Subject to Revision

Putting in operation

1. Replace the belt guard.
2. Reconnect the negative cable to the batteries.
3. Close the doors.

10.4.9 Battery maintenance

➤ Check the charging system if the batteries discharge without obvious reason.

10.4.9.1 Safety

⚠ WARNING

Danger of acid burns from escaping electrolyte!

➤ *Wear appropriate protective clothing including acid-proof rubber gloves.*

➤ *Always wear eye and face protection.*

➤ *Do not tip the battery. Electrolyte may escape from vent holes.*

➤ *Work with caution.*

When working on batteries, comply with the following safety signs

A warning label with safety signs is attached to the battery.

10-M0167

Fig. 53 Safety signs - warning labels on the battery

➤ Take heed of any safety signs on the battery warning label.
The individual safety signs have the following meaning:

- 1 – Fire, sparks, open flame and smoking are forbidden!
- 2 – Eye and face protection must be worn because of the danger of acid burns.
- 3 – Keep children well away from batteries and electrolyte.
- 4 – Wear protective gloves, batteries are filled with caustic electrolyte!
- 5 – Observe the battery manufacturer's instructions!
- 6 – Follow the safety rules, explosion hazard!

Further instructions on working with batteries

➤ Do not remove battery terminal covers unnecessarily.

PRELIMINARY Subject to Revision

- ➤ Do not lay tools on the battery. This can lead to short circuiting, overheating and battery bursting!
- ➤ Take particular care when the battery has been in service for a long time or has just been charged, as highly explosive gas is emitted!
  Ensure adequate ventilation!

10.4.9.2 Ensuring battery charge condition

If the machine has not been operated for a longer period of time, the batteries may self-discharge. The starting voltage may be insufficient to start the engine when needed. Moreover, exhaustive discharge of batteries can result in battery damage.

Always consider the following for starter batteries:
Recharge if stored for 30 days or longer!

The current charge level of the starter batteries can be read from the *Battery voltage* operating mode display at the SIGMA CONTROL MOBIL.

Starter batteries charge level

Charge level [%]		Voltage display [V]		Electrolyte density [lb/gal]	Notes
		12 V	24 V		
100		12.7 - 12.85	25.4 - 25.7	10.60	Battery OK, fully charged.
75		12.5	25.0	10.35	Recharging required!
65		12.4	24.8	10.18	
50		12.3	24.6	10.09	Limit of starting capacity!
25		12.0	24.0	9.68	Battery discharged below permitted discharge limit.
20		11.9	23.8	9.51	
0		11.6	23.2	9.09	Battery permanently damaged due to total discharge!
Values at 77° F					

Tab. 84 Starter batteries charge level

- ➤ Check battery charge and recharge with suitable charging device, if necessary.

10.4.9.3 Battery check and care

Even so-called 'maintenance-free' batteries need a degree of care to obtain their maximum operational life.

The outside of the battery and the terminals should be cleaned regularly with a soft cloth. This avoids current leaks and minimizes the discharge rate.

PRELIMINARY Subject to Revision

Material
Terminal grease
Distilled water
Cleaning cloth
Protective gloves
Eye protection

Precondition
The machine is switched off.
The machine is standing level.
The machine is fully vented, the pressure gauge reads 0 psig.
The machine has cooled down.

➤ Open the left-hand door.
1. Clean the casing and terminals. Do not use a wire brush!
2. Lightly grease the terminals to prevent corrosion.
3. Check that the batteries and cable connections are properly seated and tighten if necessary.

Checking the battery electrolyte level:

The fluid is generally sufficient for the life of the battery. Nevertheless, the fluid level should be checked annually. The level should be up to the mark, 0.4 inches above the plates.

Replace the battery immediately if the casing leaks!

1. **NOTICE** *Battery destruction!*
Topping up with pure acid will increase the electrolyte concentration and can destroy the battery.
➤ *Top off only with distilled water.*
2. Check the electrolyte level.

If the electrolyte level does not reach the mark -
➤ Top off with distilled water.

➤ Close the door.

Winter operation:

Battery performance is particularly affected by winter operating conditions. Only a fraction of the normal starting energy is available at low temperatures.

1. **NOTICE** *Danger of batteries freezing!*
Discharged batteries are subject to frost damage and can freeze at 14 °F.
➤ *Check battery charge condition with a specific gravity tester.*
➤ *Recharge the batteries.*
➤ *Clean the battery terminals and wipe with grease.*
2. Check the battery charge weekly.
Recharge as necessary.
3. For machine standstill times of several weeks: Remove the batteries and store in a frost-free environment.

In extreme cases, the use of heavy-duty cold-start batteries and/or additional batteries is recommended.

PRELIMINARY Subject to Revision

10.4.9.4 Battery removal and installation

Precondition The machine is switched off.
The machine is standing level.
The machine is fully vented, the pressure gauge reads 0 psig.
The machine has cooled down.

1. **⚠ CAUTION** *There is danger of batteries bursting!*
   If a battery is short circuited it will overheat and can burst.
   - ➤ *Never short-circuit a battery (e.g. with a hand tool).*
   - ➤ *Wear gloves and eye protection.*
2. **NOTICE** *Excessive voltage produced by the engine generator!*
   Voltage peaks can destroy the alternator regulator and diodes.
   - ➤ *The batteries serve as a buffer and must not be disconnected while the engine is running.*
   - ➤ *Carry out work on batteries only with the machine shut down.*
3. Open the left-hand door.
4. Disconnect the negative cable first, then the positive cable.
5. Unscrew the battery fixing clamp.
6. Replace in the reverse order.
7. Make sure the battery is properly secured.
8. Close the door.

Replacing batteries

Replacement batteries must have the same capacity, current strength and design as the original batteries.

➤ Always replace batteries with the same type.

Old batteries are hazardous waste and must be disposed of correctly in accordance with local environmental protection regulations.

10.4.10 Checking the fastening of the fuel tank

The machine is equipped with a fuel tank or tanks. These are fastened with lashing strips and ratchets.

Precondition The machine is shut down,
the machine is standing level,
the machine is fully vented, the pressure gauge reads 0 psig,
the machine is cooled down,
all compressed air consumers are disconnected and the air outlet valves are open.

NOTICE

The lashing strip of the fuel tank is overly tightened!
The plastic tank can be damaged by excessive tightening of the lashing strips.
The fuel tank may burst and spill.

- ➤ *Do not overtighten the lashing strips.*
- ➤ *Slightly hand-tighten the lashing strips.*

PRELIMINARY Subject to Revision

Carrying out visual check

1. Check the lashing strips for tears and fraying in the fabric, and for damages to the ratchet.
   Change any damaged lashing strip immediately.
2. Check whether the lashing strips are tight with the tank and that the ratchet is closed.
   If the lashing strips sits loose, or the ratchet is not closed properly, tighten the fastening.

Tightening the fastening of the fuel tank

The lashing strips are tensioned via the integrated ratchet.

The lashing strips must fit closely around the fuel tank. The tensioning force of the strips must not exceed 10 daN (approx. 25 lbf), slightly hand-tighten only.

➤ Hand-tighten the lashing strip with the integrated ratchet and push the ratchet to the strip.

10.4.11 Replace the filter insert for the reduction agent pump

Always wear protective gloves when working on components of the SCR system!

Make sure no dirt can enter the reduction agent system during maintenance. Clean components and their surroundings before dismounting.

Material
Spare parts
Receptacle
Cleaning cloth
Protective gloves
Socket wrench SW 1.06 in

Precondition
The machine is switched off.
The machine is standing level.
The machine is fully vented, the pressure gauge reads 0 psig.
The machine has cooled down.
All compressed air consumers are disconnected and the air outlet valves are open.
Negative cable to the batteries disconnected.

PRELIMINARY
Subject to Revision

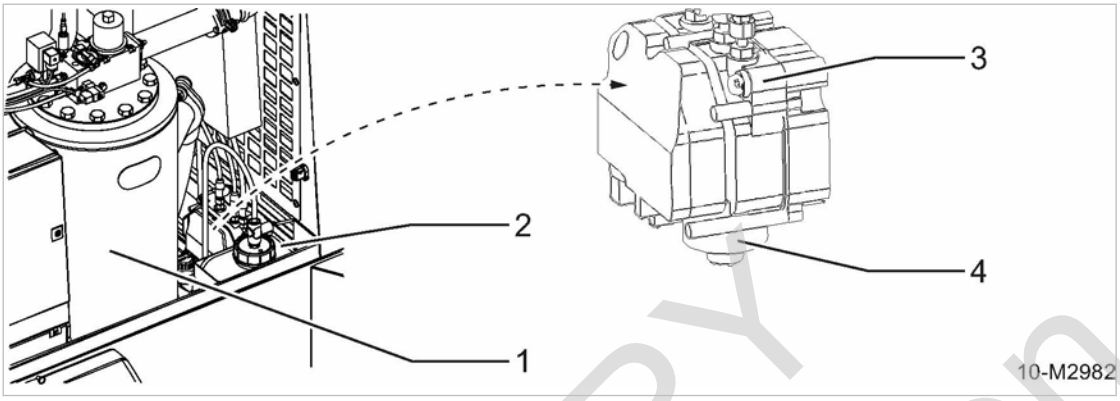

Fig. 54 Reduction agent pump

1	Oil separator tank	3	Reduction agent pump
2	*Option da:* Condensate collection tank for air treatment	4	Filter for reduction agent pump

➤ Open the left-hand door.

Changing filter insert:

Option da:
If applicable, remove the condensate collection tank for the air treatment beforehand.

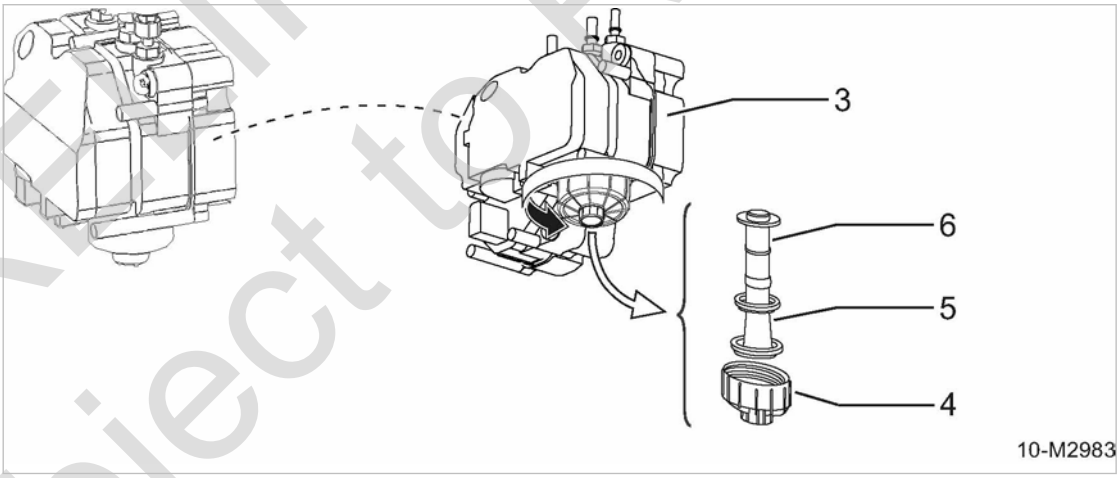

Fig. 55 Changing the filter insert for the reduction agent pump

3	Reduction agent pump	5	Compensation material
4	Filter cap	6	Filter element

1. Place a container beneath the reduction agent pump.
2. Unscrew the filter cap counter-clockwise using a socket wrench and place aside.
3. Pull out filter insert and compensation material.
4. Thoroughly clean the housing, filter cap and sealing surfaces with a lint-free cloth.
5. Check sealing surfaces on housing and cap.
   In case of damage: Replace cap or pump/have it replaced.
6. Insert new filter insert with compensation material.

PRELIMINARY
Subject to Revision

7. Screw on filter cap (200 ± 22 lbf in tightening torque)
8. Carefully remove the receptacle.

Dispose of reduction agent and any materials and components contaminated with it in accordance with environmental protection regulations.

Putting in operation

1. Reconnect the negative cable to the batteries.
2. Close the door

Starting the machine and performing a test run

1. Switch the machine on and run it in IDLE mode for approx. 1 minute.
2. Shut down the machine.
3. Open the left-hand door.
4. Visually check the reduction agent system for leaks.
5. Tighten all fittings.
6. Close the door.

10.5 Compressor Maintenance

➤ Perform maintenance tasks according to the schedule in chapter 10.3.3.1.

10.5.1 Checking cooling oil level

The oil level is checked at the oil separator tank filling port. Oil must be visible in the port when the filler plug is removed.

Material: Wrench
Cleaning cloth

Precondition: The machine is shut down.
The machine is standing level.
The machine is fully vented, the pressure gauge reads 0 psig.
All compressed air consumers are disconnected and the air outlet valves are open.

PRELIMINARY Subject to Revision

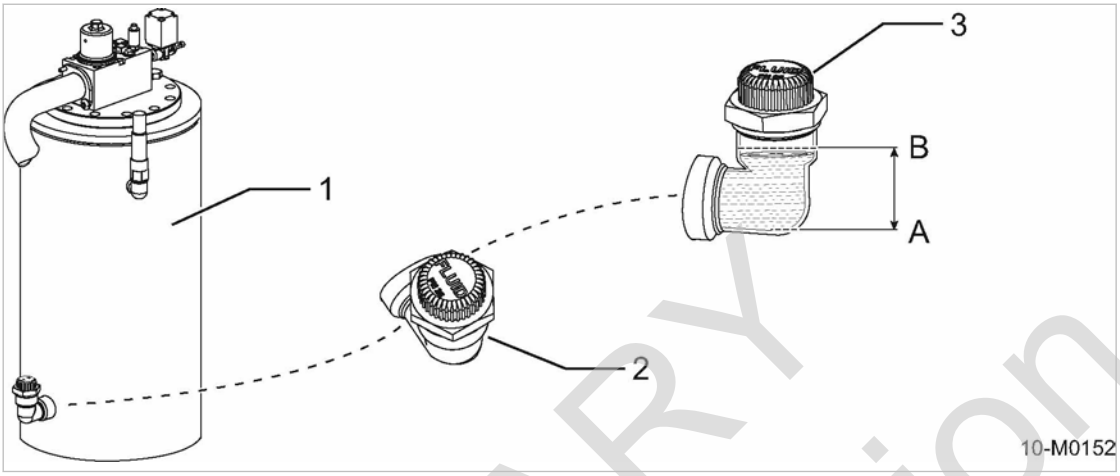

Fig. 56 Checking cooling oil level

1	Oil separator tank	A	Minimum level
2	Oil filler port	B	Maximum level
3	Filler plug		

1. Open the left-hand door.
2. Slowly unscrew and withdraw the plug from the oil filler port.
3. Check the cooling oil level.
   Top up if no oil is visible.
4. Replace the plug in the filler port.
5. Close the access door.

10.5.2 Cooling oil filling and topping off

Material
Cooling oil
Funnel
Cleaning cloth
Wrench

Precondition
The machine is shut down.
The machine is standing level.
The machine is fully vented, the pressure gauge reads 0 psig.
The machine has cooled down.
All compressed air consumers are disconnected and the air outlet valves are open.
Negative cable to the batteries disconnected.

Filling with cooling oil

A sticker on the oil separator tank specifies the type of oil used.

1. **NOTICE** *The machine could be damaged by unsuitable oil!*
   - ➤ *Never mix different types of oil.*
   - ➤ *Never top off with a type of oil that differs from the one already used in the machine.*
2. Open the left-hand door.
3. Slowly unscrew and withdraw the plug from the oil filler port.

PRELIMINARY Subject to Revision

4. Top off the cooling oil to the maximum level (B) with the help of a funnel.
5. Check the oil level.
6. Check the filler plug gasket for damage.
   Damaged gasket: replace gasket.
7. Replace the plug in the filler port.
8. Reconnect the negative cable to the batteries.
9. Close the door.

Starting the machine and performing a test run

1. Start the machine and run in IDLE until the operating temperature is reached.
2. Close the outlet valves.
3. Shut down the machine.
4. Wait until the machine has automatically vented.
   Pressure gauge reads 0 psig!
5. Open the outlet valves.
6. Open the left-hand door.
7. Check the oil level after about 5 minutes.
   Cooling oil level too low: Top off the cooling oil.
8. Visually inspect for leaks.
9. Close the door.

10.5.3 Changing the cooling oil

Drain the oil completely from the following components:
- Oil separator tank
- Oil cooler
- Oil pipes

➢ Always change the oil filter when changing the oil.

Material: Cooling oil
Receptacle
Funnel
Cleaning cloth

Precondition: The machine is shut down.
The machine is standing level.
The machine is fully vented, the pressure gauge reads 0 psig.
The machine is at operating temperature.
All compressed air consumers are disconnected and the air outlet valves are open.
Negative cable to the batteries disconnected.

PRELIMINARY Subject to Revision

⚠ CAUTION

Danger of burning from hot components and oil.

➤ *Wear long-sleeved clothing and gloves.*

➤ Open the left-hand door.

10.5.3.1 Draining the cooling oil (machine with chassis)

The drain points for the lubricating and cooling fluids of engine and compressor are led to the outside. The cooling oil is drained using hoses screwed into the drain ports of the oil separator tank and the oil cooler. At the drain side, the hose is closed with a shut-off valve and sealed with a plug.

See chapter 4, Fig. 9 for the location of the drain points for lubricant and coolant in the floor pan.

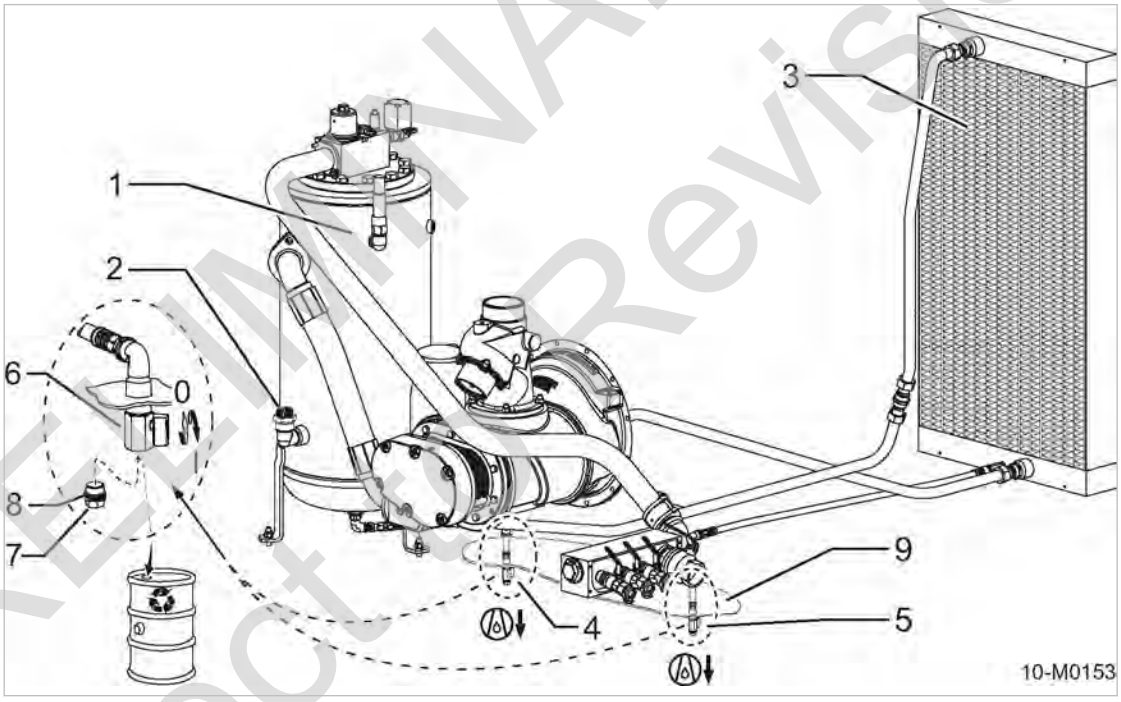

Fig. 57 Draining the compressor cooling oil

1	Oil separator tank	6	Shut-off valve (ball valve) I - open 0 - closed
2	Oil filler plug	7	Screwed sealing cap - cooling oil drain
3	Oil cooler	8	Sealing ring
4	Cooling oil drain, oil separator tank	9	Floor pan
5	Cooling oil drain, oil cooler		

➤ Remove the plug 2 from the oil separator tank filling port.

Draining the cooling oil from the oil separator tank

1. Place a receptacle beneath the appropriate cooling oil drain of the oil separator tank (beneath floor pan).
2. Unscrew the filler plug 7 at the cooling oil drain of the oil separator tank.
3. Open the shut-off valve 6 at the cooling oil drain and catch the escaping cooling oil.

PRELIMINARY
Subject to Revision

4. Close the shut-off valve.
5. Check the sealing ring [8] of the filler plug.
   The sealing ring is deformed or defective: Replace the sealing ring.
6. Screw in the plug.

Draining the oil from the oil cooler

1. Place a receptacle beneath the appropriate cooling oil drain of the oil cooler (beneath floor pan).
2. Unscrew the filler plug [7] at the cooling oil drain of the oil cooler.
3. Open the shut-off valve [6] at the cooling oil drain and catch the escaping cooling oil.
4. Close the shut-off valve.
5. Check the sealing ring [8] of the filler plug.
   The sealing ring is deformed or defective: Replace the sealing ring.
6. Screw in the plug.

Performing final work steps

1. Replace the plug in the oil separator tank filling port.
2. Close the door.

Dispose of used oil and oil-contaminated working materials according to environmental protection regulations.

Further information: See chapter 10.5.2 for cooling oil filling.

10.5.3.2 Option oe, rw, rx
Draining the cooling oil (closed floor pan - stationary machine)

Compressor cooling oil and engine coolant drain lines are led to a central point outside the machine on stationary machines and machines with closed floor pan. Oil drainage is via hose and pipe lines screwed into the drain ports of the oil separator tank and the airend. Each pipeline is provided with a shut-off valve and a plug.

PRELIMINARY
Subject to Revision

Option oe, rw, rx

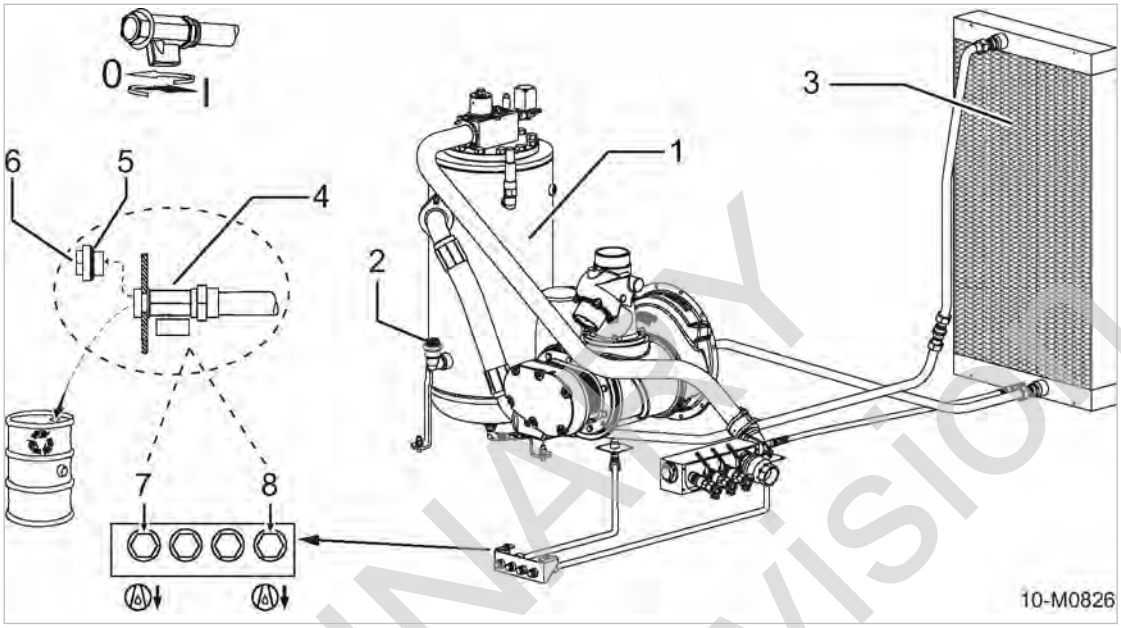

Fig. 58 Draining the cooling oil (closed floor pan - stationary machine)

1 Oil separator tank
2 Oil filler plug
3 Oil cooler
4 Shut-off valve (ball valve)
I - Open
0 - Closed
5 Sealing ring
6 Screwed sealing cap - cooling oil drain
7 Oil separator tank drain
8 Oil cooler drain

➤ Remove the plug 2 from the oil separator tank filling port.

Draining the cooling oil from the oil separator tank

1. Position a receptacle beneath the oil drainage point for the oil separator tank's cooling oil 7.
2. Unscrew the corresponding screwed sealing cap 6 at the cooling oil drain.
3. Open the appropriate shut-off valve 4 at the cooling oil drain and catch the escaping cooling oil.
4. Close the shut-off valve.
5. Check the sealing ring 5 of the filler plug.
   The sealing ring is deformed or defective: Replace the sealing ring.
6. Screw in the plug.

Draining the oil from the oil cooler

1. Position a receptacle beneath the oil drainage point for the oil cooler's cooling oil 8.
2. Unscrew the corresponding screwed sealing cap 6 at the cooling oil drain.
3. Open the appropriate shut-off valve 4 at the cooling oil drain and catch the escaping cooling oil.
4. Close the shut-off valve.

PRELIMINARY Subject to Revision

5. Check the sealing ring [5] of the filler plug.
   The sealing ring is deformed or defective: Replace the sealing ring.
6. Screw in the plug.

Performing final work steps

1. Replace the plug [2] to the filling port of the oil separator tank.
2. Close the door.

Dispose of used oil and oil-contaminated working materials according to environmental protection regulations.

Further information: See chapter 10.5.2 for cooling oil filling.

10.5.4 Replacing the compressor oil filter

Material: Spare part
Receptacle
Cleaning cloth

Precondition: The machine is switched off.
The machine is fully vented, the pressure gauge reads 0 psig.
The machine has cooled down.
All compressed air consumers are disconnected and the air outlet valves are open.
Negative cable to the batteries disconnected.

⚠ CAUTION

Danger of burning from hot components and oil.

➤ *Wear long-sleeved clothing and gloves.*

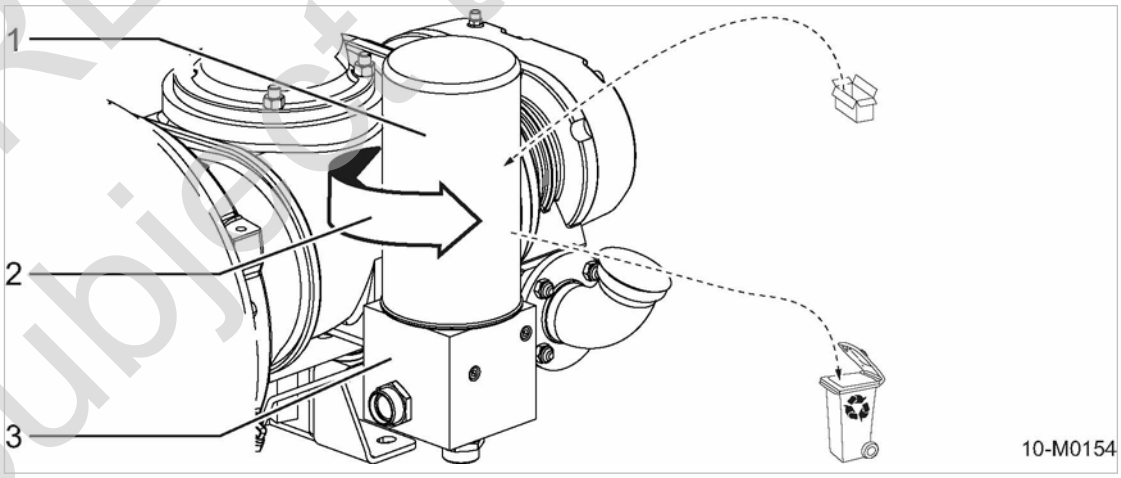

Fig. 59 Change the oil filter

[1] Oil filter
[2] Direction of rotation to unscrew the oil filter.
[3] Thermostatic valve

PRELIMINARY Subject to Revision

Changing the oil filter

1. Open the left-hand door.
2. Prepare a receptacle.
3. Loosen the filter by turning counter-clockwise and catch any escaping oil.
4. Carefully clean sealing surfaces using lint-free cloth.
5. Lightly oil the new filter's gasket.
6. Turn the oil filter clockwise by hand to tighten.
7. Check the oil level in the oil separator tank.
   Cooling oil level too low: Top off the cooling oil.
8. Reconnect the negative cable to the batteries.
9. Close the door.

Dispose of old cooling oil and any materials or parts contaminated with oil according to environment protection regulations.

Starting the machine and performing a test run

1. Start the machine and run in IDLE until the operating temperature is reached.
2. Close the outlet valves.
3. Switch off the machine.
4. Wait until the machine has automatically vented.
   Pressure gauge reads 0 psig!
5. Open the outlet valves.
6. Open the left-hand door.
7. After approximately 5 minutes: Check the cooling oil level.
   Cooling oil level too low: Replenish with more cooling oil.
8. Visually inspect for leaks.
9. Close the door.

10.5.5 Oil separator tank dirt trap maintenance

The control valve is mounted on the oil separator tank cover. The control valve has two different dirt traps that must be cleaned at least once a year.

Material
Cleaning cloth
Wrench
Small screwdriver
Maintenance kit, control valve
Petroleum ether or spirit

Precondition
The machine is switched off.
The machine is fully vented, the pressure gauge reads 0 psig.
The machine has cooled down.
All compressed air consumers are disconnected and the air outlet valves are open.
Negative cable to the batteries disconnected.

PRELIMINARY Subject to Revision

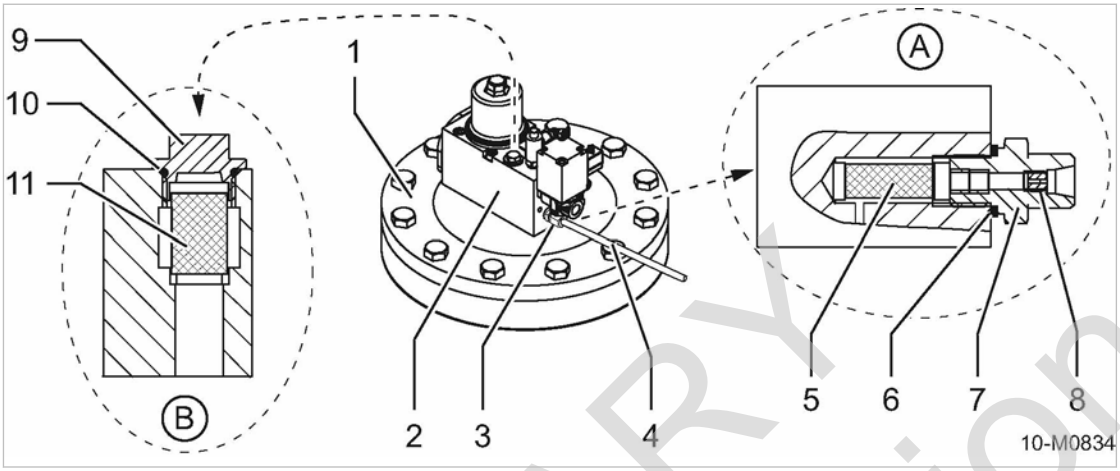

Fig. 60 Oil separator tank dirt trap maintenance

1	Oil separator tank cover	7	Screw-in connector
2	Control valve	8	Nozzle
3	Union nut	B	Detail: Dirt trap, proportional controller
4	Oil return line	9	Screw plug
A	Detail: Dirt trap, oil return line	10	O-ring
5	Screen filter	11	Strainer
6	Sealing ring		

➤ Open the left-hand door.

10.5.5.1 Oil return line dirt trap maintenance

See Fig. 60; Detail: A.

1. Undo the union nut 3 and bend the oil return line 4 to one side.
2. Unscrew the screw-in connector 7.
3. Unscrew the strainer 5 from the screw-in connector.
4. Use a screw driver to unscrew the nozzle 8 from the screw-in connector.
5. Clean the housing, strainer and sealing ring 6 with cleaning solvent or spirit.
6. Check the nozzle, strainer and sealing ring for wear.
   When clearly worn: replace components.
7. Fit the nozzle and strainer to the screw-in connector.
8. Screw in the connector making sure the sealing ring seats properly.
9. Refit the oil scavenge line.

10.5.5.2 Maintenance of the proportional controller dirt trap

See Fig. 60; Detail: B.

1. Unscrew the plug 9 and remove the strainer 11.
2. Clean the plug, strainer and O-ring 10 with cleaning solvent or spirit.
3. Check the strainer and O-ring for wear.
   When clearly worn: replace components.
4. Place the strainer on the screw plug.
5. Screw in the plug making sure the O-ring seats properly.

PRELIMINARY Subject to Revision

Putting in operation

1. Reconnect the negative cable to the batteries.
2. Close the door.

Dispose of old parts and contaminated materials according to environmental regulations.

Starting the machine and performing a test run

1. Switch the machine on and run it in IDLE mode for approx. 5 minutes.
2. Shut down the machine.
3. Wait until the machine has automatically vented.
   Pressure gauge reads 0 psig!
4. Open the outlet valves.
5. Open the left-hand door.
6. Visually inspect for leaks.
7. Shut down the machine.
8. Close the door.

10.5.6 Changing the oil separator cartridge

The oil separator cartridge cannot be cleaned.

The service life of the oil separator cartridge is influenced by:

- Contamination in the inlet air;
- Adherence to the replacement intervals for the:
  - Cooling oil
  - Oil filter
  - Air filter

Material
Spare part
Cleaning cloth
Wrench

Precondition
The machine is switched off.
The machine is fully vented, the pressure gauge reads 0 psig!
The machine has cooled down.
All compressed air consumers are disconnected and the air discharge valves are open.
Negative cable to the batteries disconnected.

PRELIMINARY Subject to Revision

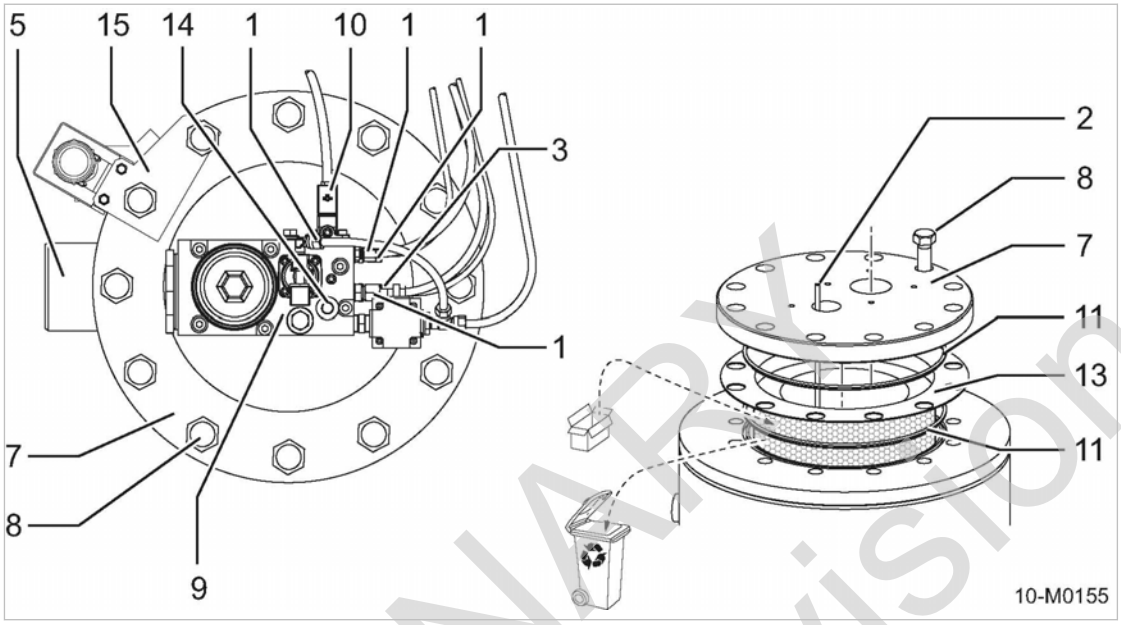

Fig. 61 Changing the oil separator cartridge

1	Control air line clamping nut	9	Control valve
2	Oil return line (screwed onto the cover)	10	Solenoid valve
3	Oil return line clamping nut (lower connection, screwed into the dirt trap)	11	Sealing ring
		13	Oil separator cartridge
5	Air pipe	14	Pressure transducer
7	Cover	15	Safety valve guard plate
8	Fixing screw		

➤ Open the right-hand access door.

Changing the oil separator cartridge:

1. Unscrew clamping nuts 1 and 3, placing the components with their connections carefully to one side.
2. Pull out the solenoid valve connecting cable plug 10 and withdraw the cable.
3. Pull out the plug to the sensor 14 and withdraw the cable.
4. Remove the screws 8 securing the cover 7 of the oil separator tank.
5. Remove the protective guard 15 from the safety valve.
6. Carefully lift the cover and put to one side.

Take particular care with the following components:

- The oil return line 2 screwed to the underside of the cover.
- The safety valve, covered by the guard plate 15.

7. Remove the old oil separator cartridge 13 and sealing rings 11.
8. Clean all sealing surfaces, taking care that no foreign bodies (dirt particles) fall into the oil separator tank.
9. Insert the new oil separator cartridge and sealing rings.

PRELIMINARY
Subject to Revision

10. Replace the cover and screw down tightly.

➤ Tighten screws crosswise.
➤ Observe specified tightening torque when screwing down the cover.
Reference values can be found in “Technical Specifications”, Chapter 2.3.3.

11. Secure the air pipe (5) in position with new (self-locking) nuts.

➤ Follow the instructions given in Chapter 10.11.6 concerning flexible pipe connections.

12. Position the guard plate (15).
13. Replace and tighten all loosened fittings.
14. Reconnect all cables.
15. Check the oil level in the oil separator tank.
    Cooling oil level too low: Top up the cooling oil.

Maintenance of the control valve dirt trap must be carried out whenever the oil separator cartridge is changed.

Further information — Information regarding maintenance of the control valve dirt trap can be found in Chapter 10.5.5.

Putting in operation:

1. Reconnect the negative cable to the batteries.
2. Close the door.

Dispose of old parts and contaminated materials in accordance with environmental regulations.

Starting the machine and performing a test run:

1. Start the machine and run in IDLE until the operating temperature is reached.
2. Close the discharge valves.
3. Shut down the machine.
4. Wait until the machine has automatically vented.
   The pressure gauge reads 0 psig!
5. Open the discharge valves.
6. Open the left-hand door.
7. After approximately 5 minutes: Check the cooling oil level.
   Cooling oil level too low: Top up the cooling oil.
8. Visually inspect for leaks.
9. Close the door.

10.5.7 Compressor air filter maintenance

Clean the air filter as per the maintenance table but at the latest when the controller displays the corresponding maintenance message.

Renew the air filter element after 2 years or after it has been cleaned 5 times.

PRELIMINARY Subject to Revision

- Using the machine without an air filter element is not permitted!
- Do not use a filter element with damaged folds or gasket.
- The use of an unsuitable air filter can permit dirt to ingress the pressure system and cause premature wear and damage to the machine.

Material
Compressed air for blowing out
Spare parts (as required).
Cleaning cloth

Precondition
The machine is switched off.
The machine is fully vented, the pressure gauge reads 0 psig.
The machine has cooled down.
All compressed air consumers are disconnected and the air outlet valves are open.

NOTICE

Damaged air filter element.
Machine damage due to contaminated intake air.

➤ *Do not try to clean the filter element by striking or knocking it.*
➤ *Do not wash the filter element.*

Analyzing the warning message on the controller

The air filters are connected to the controller via sensors. If the level of dirtiness of the air filter increases, a warning message is sent to the controller.

- The controller display will show "Service compressor air filter".
- The «Information» key illuminates.
- The «Acknowledge» key flashes.

Servicing the compressor air filter is required as soon as this message is displayed.

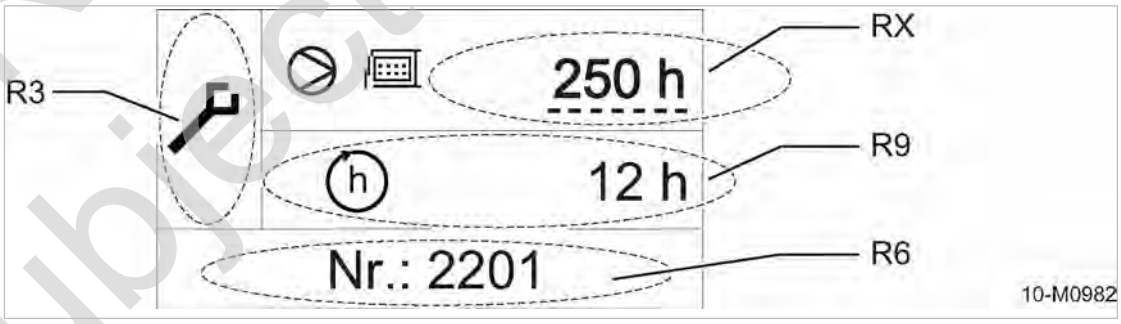

Fig. 62 Warning messages: Compressor air filter maintenance

R3 Event memory category: Maintenance
R6 Message codes
R9 Time when maintenance is due.
RX Maintenance interval

➤ Maintain the filter.
➤ Open the right-hand access door.

PRELIMINARY Subject to Revision

Cleaning the air filter

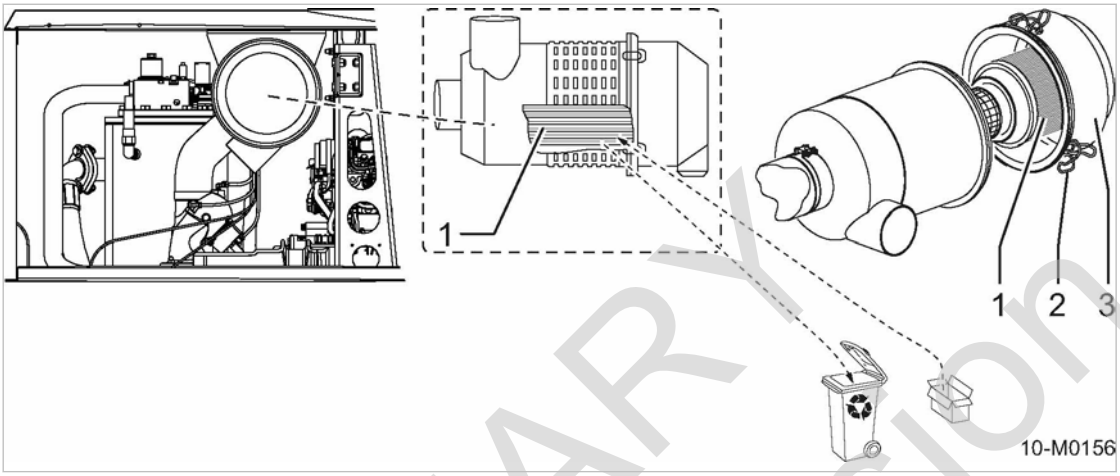

Fig. 63 Compressor air filter maintenance

1 Filter element (air filter)
2 Retaining clip
3 Filter cap

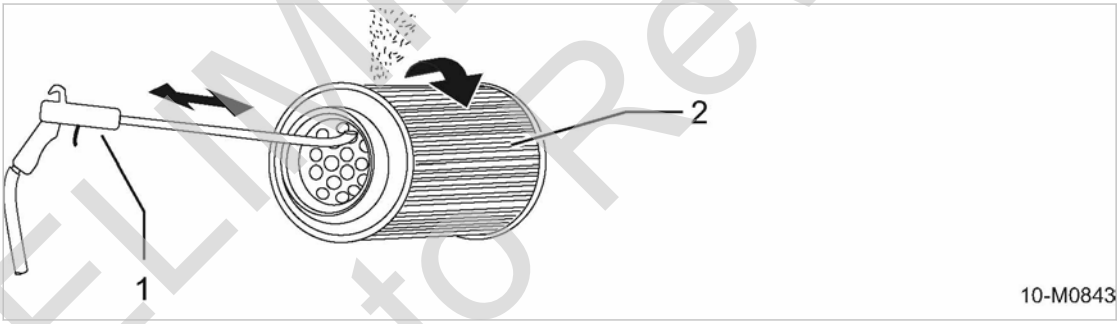

Fig. 64 Clean the filter element (air filter)

1 Compressed air gun with blast pipe bent to 90° at the end
2 Filter element (air filter)

1. Release the retaining clamps, lift off the cap an extract the air filter.
2. Carefully clean the inside of the housing, the cover and sealing faces with a damp cloth.
3. Cleaning the filter element:
   - Use dry compressed air (≤ 30 psig!) at an angle to blow dust from the element from inside to outside until no further dust develops.
   - The blast pipe must be long enough to reach the bottom of the element.
   - The tip of the blast pipe must not touch the element.
   - Cleaning sealing faces.
4. Inspect the element carefully for any damage.

   Damaged filter element: Replace filter element.
5. Insert the cleaned or new filter element into the filter housing. Make sure it is properly in place and sealed by its gaskets.
6. Replace the cap and secure with the clip.

PRELIMINARY Subject to Revision

Concluding the maintenance

Maintenance must be acknowledged after the air filter has been maintained.

For more information about acknowledging the maintenance message and resetting the maintenance timer, see the separate operating manual of the SIGMA CONTROL MOBIL

Precondition Air filter maintained

1. Acknowledge the maintenance message.
   - Confirm the message with the «Acknowledge» key.
   - The «Acknowledge» key is extinguished but the «Information» key is still illuminated.
2. Resetting the maintenance interval counter.
   - Simultaneously press and hold the «Acknowledge» and «Enter» keys for 2 seconds.
   - The system will automatically display the input menu for the password if no password is active.
   - Password (for example: Customer password: 4512) enter and confirm with the keypad.
   - Simultaneously press and hold the «Acknowledge» key and «Enter» for 2 seconds.

Result The maintenance interval counter is reset and the «Information» key extinguishes.

➤ Close the door.

Dispose of old parts and contaminated materials according to environmental regulations.

10.6 Cleaning the cooler

The frequency of cleaning is mainly dependent on local operating conditions.
Severe clogging of the coolers causes overheating and machine damage.
Check coolers regularly for clogging.
Avoid creating dust swirls. Wear breathing protection if necessary.
Do not clean the coolers/radiators with a sharp instrument as they may be damaged.
A severely contaminated cooler/radiator should be cleaned by KAESER SERVICE.

Material Compressed air
Breathing mask (if necessary)
Water or steam jet blaster

Precondition The machine is placed over a washing station equipped with an oil separator.
The machine is switched off.
The machine has cooled down.
The machine is fully vented, the pressure gauge reads 0 psig.
All compressed air consumers are disconnected and the air outlet valves are open.
Negative cable to the batteries disconnected.

PRELIMINARY Subject to Revision

NOTICE

Damage to the machine can be caused by water or steam jets.
Direct water or steam jets can damage or destroy electrical components and display instruments.

- *Cover up electrical components such as the control cabinet, generator, starter and display instruments.*
- *Do **not** direct water or steam jets at sensitive components such as the generator, starter or indicating instruments.*
- *Deploy the extension pole of the pressure washer at a distance of at least 20 inches and at an approximate 90° angle to the cooler/radiator surface.*

- Open both doors.

10.6.1 Cleaning the compressor cooler and engine radiator

The compressor oil cooler and engine coolant radiator are combined in a single cooler block.

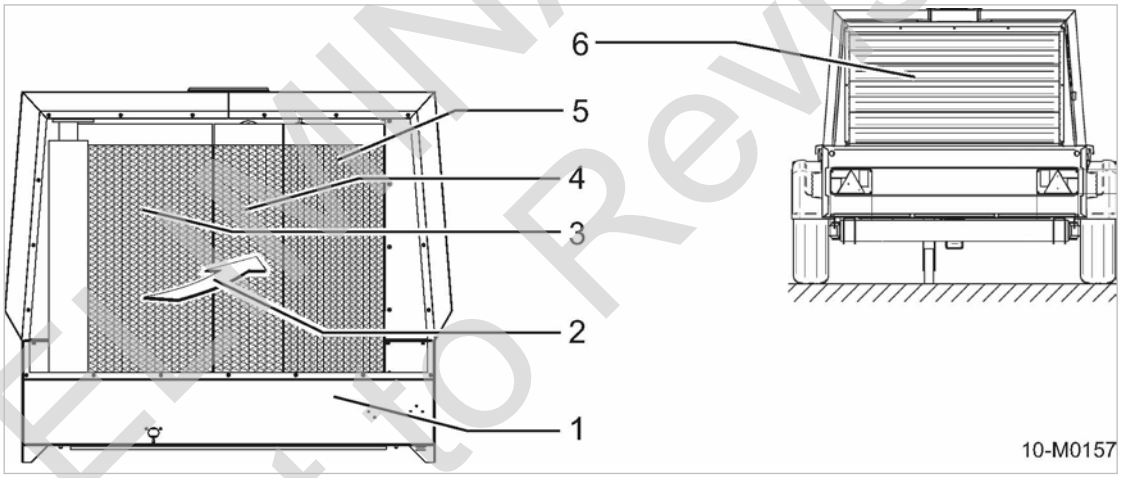

Fig. 65 Cleaning the compressor cooler and engine radiator

1. Front end of machine, sound insulation (radiator grill) removed
2. Direction of impacting water or steam jet (from outside to inside)
3. Oil cooler (compressor)
4. Intercooler (engine)
5. Coolant cooler (engine)
6. Sound damping louvres

Cooler cleaning:

1. Seal off the air intakes of the engine and compressor air filters before starting cleaning.
2. Remove the sound damping louvres in front of the cooler/radiator.
3. Clean the cooling fins with compressed air, water or steam jet in the opposite direction to the cooling air flow (from outside to inside).
4. Replace the sound damping louvre.
5. Remove the protective coverings from the air filters.
6. Reconnect the negative cable to the batteries.
7. Close the doors.
8. Start the machine and run up to operating temperature so that excess water is evaporated.

PRELIMINARY Subject to Revision

Check the cooler for leaks:

1. Open both doors.
2. Visually inspect for leaks: Is oil/coolant leaking out?

Is a cooler leaking?

➤ Have the defective cooler repaired or replaced immediately by KAESER SERVICE.

➤ Close the doors.

Clean the cooler fins only in a washing area equipped with an oil separator!

10.6.2 Option da, df, dc, dd Cleaning the compressed air after-cooler

The compressed air after-cooler is located near the air treatment devices.

Option da, df, dc, dd

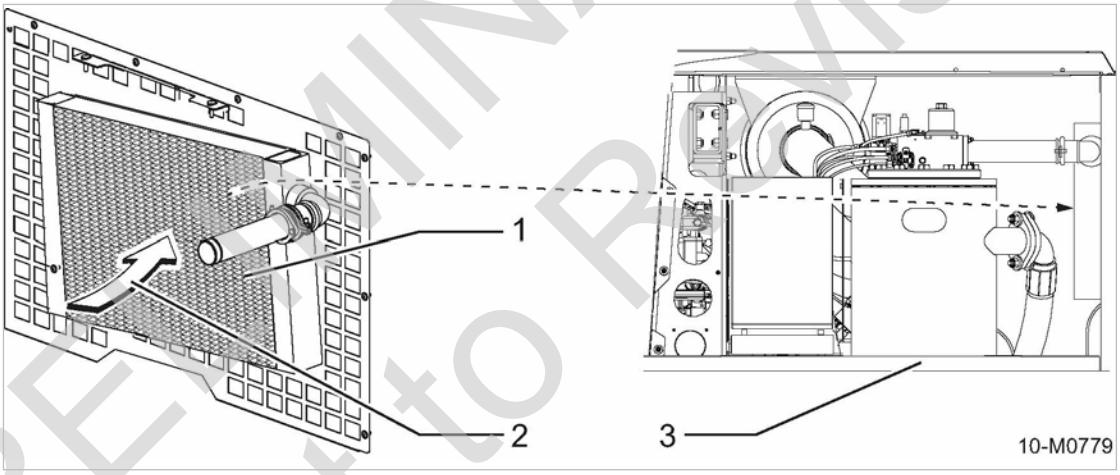

Fig. 66 Cleaning the compressed air after-cooler

1 Compressed air after-cooler
2 Direction of impacting water or steam jet (from inside to outside)
3 Left-hand door opened

1. Seal off the air intakes of the engine and compressor air filters before starting cleaning.
2. Clean the cooling fins with compressed air, water or steam jet in the opposite direction to the cooling air flow (from inside to outside).
3. Remove the protective coverings from the air filters.
4. Reconnect the negative cable to the batteries.
5. Close the doors.
6. Start the machine and run up to operating temperature so that excess water is evaporated.

Clean the cooler fins only in a washing area equipped with an oil separator!

PRELIMINARY Subject to Revision

10.7 Check/replace hose lines

Overview of hose lines of machine:

- Fuel lines of the drive engine
- Pressure hoses of the drive engine
- Pressure hoses of the compressor

The hose line are subject to natural aging regardless of proper storage or permitted utilization during machine operation. This aging changes the material and compound properties and reduces the performance capability of the hose lines. As a result the period of use for hose lines is limited.

The operator must ensure that all hose lines are checked at reasonable intervals and are replaced if required, see maintenance schedule 10.3.3.1

➤ Comply with all instructions!

10.7.1 Replace the fuel lines of the drive engine

➤ Have an authorized KAESER service representative replace the fuel lines of the drive engine.

10.7.2 Replace the pressure hoses of the engine

Overview of all pressure hoses at engine:

- Engine oil
- Coolant for the water cooler
- Charge air (if available)

➤ Have an authorized KAESER service representative replace the pressure hoses of the engine.

10.7.3 Replace the pressure hoses of the compressor

Overview of all pressure hoses on the compressor:

- Cooling oil
- Compressed air
- Control air
- Condensate

➤ Have an authorized KAESER service representative replace the pressure hoses of the compressor.

10.8 Check sound proofing material

In order to limit the machine's noise emissions to a minimum the sound proofing material that has been built into the enclosure must be checked regularly. Damaged sound proofing material must be replaced immediately.

➤ Check sound proofing material inside the enclosure for condition, fastening, and dirt.

The sound proofing material is porous, cracked, no longer exists, or severely contaminated with oil, fuel, or cleaning agent.

➤ Have an authorized KAESER service representative replace the sound proofing material that can no longer be used.

PRELIMINARY
Subject to Revision

10.9 Maintenance of rubber sealing strips

The rubber sealing strips between the body panels and the access doors serve both as a sound-proofing measure and to prevent ingress of rain water.

Care of the rubber sealing strips is especially necessary in winter to prevent the strips from sticking and tearing when the access panels are opened.

Material
Cleaning cloth
Silicone or Vaseline

Precondition
The machine is shut down.
The machine is fully vented, the pressure gauge reads 0 psig.
Machine is cooled down.
All compressed air consumers are disconnected and the air outlet valves are open.

1. Open all the doors.
2. Clean the rubber sealing strips with a lint-free cloth and check for cracks, holes and other damage.
   Have any damaged gasket replaced.
3. Properly grease the rubber strips.
4. Close the doors.

10.10 Check safety functions

➤ Perform inspection tasks/have them performed according to the maintenance schedule in chapter 10.3.3.1.

10.10.1 Check the EMERGENCY STOP device

In order to shut down the machine in the event of danger, the machine is equipped with an EMERGENCY STOP device. The EMERGENCY STOP device of the machine is referred to as «EMERGENCY» pushbutton

The position of the «EMERGENCY-STOP» pushbutton is shown in Chapter 4.2 "Machine Design".

Use the «EMERGENCY STOP» pushbutton to stop the machine only in emergencies!

Check the mechanical function of the «EMERGENCY STOP» pushbutton daily with the machine shut down.

⚠ WARNING

«EMERGENCY STOP» pushbutton locked out!
The machine cannot be stopped quickly in an emergency.

➤ *Check the function of the «EMERGENCY STOP» pushbutton.*
➤ *Do not operate the machine if the «EMERGENCY STOP» pushbutton does not work.*

Precondition
The machine is switched off.
The drive motor stands still.

1. Push the «EMERGENCY STOP» pushbutton.

PRELIMINARY Subject to Revision

2. Check if «EMERGENCY STOP» pushbutton locks properly and remains locked.
3. Check if the «EMERGENCY STOP» pushbutton unlocks by turning it in the direction of the arrow.

The «EMERGENCY STOP» pushbutton cannot be pressed or does not engage.
- ➤ Do not start the machine.
- ➤ Have the «EMERGENCY STOP» pushbutton replaced.

10.10.2 Have the activating pressure of the relief valve checked

The machine should shut down if the activating pressure of the relief valve reaches a maximum of $P_{max.}$ ($P_{max.}$ see table 85).

Check in accordance with section: "Check activating pressure of relief valve" in the separate operating manual for the SIGMA CONTROL MOBIL controller, chapter “Have safety functions checked”.

Maximum working pressure [psi]	Activating pressure [psi]
203	230

Tab. 85 Relief valve activating pressure

Material Hearing protection
Eye protection

⚠ WARNING

Risk of hearing damage when air is blown out through the pressure relief valve!
- ➤ *Close all the doors/enclosure.*
- ➤ *Wear hearing protection.*

⚠ WARNING

Risk of burns due to released cooling oil and compressed air when blowing off the pressure relief valve!
- ➤ *Wear eye protection.*

➤ Have the activating pressure of the relief valve checked.

Result When the "activating pressure" is reached, the pressure release valve actuates (blows off).

When the "activating pressure" is reached, the pressure release valve does not actuate (blow off).
- ➤ Immediately shut down the machine and cease any further operation.
- ➤ Request an inspection and/or replacement of the pressure relief valve.

10.10.3 Having excessive temperature shut-down function checked

The machine should shut down if the discharge temperature reaches a maximum of $T_{max.}$ ($T_{max.}$ [°F] see table 86).

PRELIMINARY Subject to Revision

Check in accordance with section: "Check safety shut-down at excessive airend discharge temperature" in the separate operating manual for the SIGMA CONTROL MOBIL controller, chapter “Have safety functions checked”.

Machine temperature	Value
Maximum airend discharge temperature (automatic safety shut-down) [°F]	243

Tab. 86 Safety shut-down at excessive airend discharge temperature

➤ Have shut-down at excessive airend discharge temperature checked.

Result When the maximum airend discharge temperature is exceeded, the SIGMA CONTROL MOBIL controller switches the machine off.

The machine does not shut down?

The excessive temperature shut-down function is no longer ensured.

➤ Immediately shut down the machine and cease any further operation.

➤ Have machine checked.

10.11 Maintenance for Optional Items

➤ Perform maintenance tasks according to the schedule in chapter 10.3.3.2.

10.11.1 Option da, df, dc, dd Centrifugal separator maintenance

Clean the centrifugal separator condensate drain, if the moisture content in the compressed air is too high.

Material Cleaning cloth
Wrench
Small screwdriver
Spare parts (if required)
Petroleum ether or spirit

Precondition The machine is switched off,
the machine has cooled down,
the machine is fully vented, the pressure gauge reads 0 psig.
All compressed air consumers are disconnected and the air outlet valves are open.
Negative cable to the batteries disconnected.

PRELIMINARY Subject to Revision

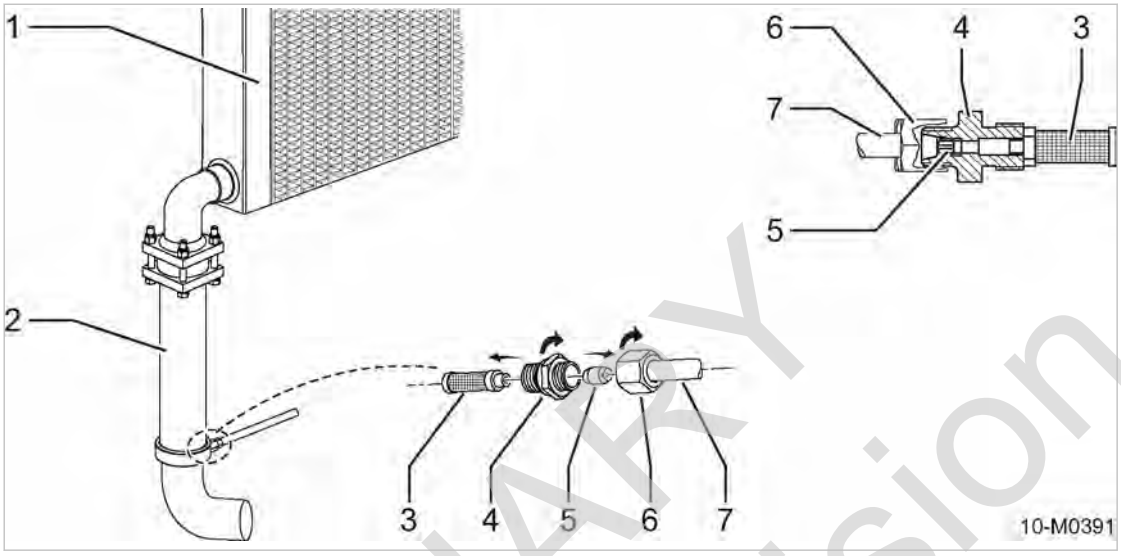

Fig. 67 Cleaning the dirt trap

1 Compressed air aftercooler
2 Centrifugal separator
3 Strainer
4 Pipe fitting
5 Nozzle
6 Clamping nut, condensate drain line
7 Condensate drain line

➤ Open the right-hand access door.

Cleaning the condensate drain

1. Loosen the clamping nut 6 and detach the condensate drain line 7 from the screw-in fitting.
2. Unscrew the screw-in fitting 4 from the centrifugal separator and pull off the strainer 3.
3. Use a screwdriver to unscrew the nozzle 5 from the housing of the screw-in fitting.
4. Clean the nozzle, strainer and hose fitting with cleaning solvent or spirit.
5. Check the nozzle and strainer for wear.
   When clearly worn: replace components.
6. Plug the strainer onto the screw-in fitting.
7. Install the screw-in fitting on the centrifugal separator.
8. Screw in the nozzle and re-attach the condensate drain line with the clamping nut.

Putting in operation

1. Reconnect the negative cable to the batteries.
2. Close the door.

Starting the machine and performing a test run

1. Switch the machine on and run it in IDLE mode for approx. 5 minutes.
2. Shut down the machine.
3. Wait until the machine has automatically vented.
   Pressure gauge reads 0 psig!
4. Open the outlet valves.
5. Open the right-hand access door.

PRELIMINARY Subject to Revision

6. Check the centrifugal separator housing and the condensate drain line's hose line for leaks.
7. Close the door.

10.11.1.1 Option da
Check condensate drainage

If the ambient air is very humid, significant amounts of condensate will precipitate when operating the machine. Condensate is transported by a hose line into the machine's condensate collector. The maximum fill quantity of the condensate collector is limited. Therefore, the condensate collector must be checked/maintained daily.

Material Cleaning cloth

➤ Open the right-hand access door.

Check condensate collector:

The condensate level can be viewed in the transparent collector tank.

1. **NOTICE** *Environmental damages from contaminated condensate!*
   ➤ *Empty the condensate collector regularly.*
   ➤ *Store and dispose of condensate in accordance with local environmental protection regulations.*
2. Empty the condensate collector daily or when required.

➤ Empty condensate collector prior to any transportation of the machine.
➤ Empty the condensate collector in accordance with Chapter 8.4.4.

Check condensate drain pipe:

In order for all of the accumulated condensate to reach the condensate collector, the condensate drain pipe must always be properly fixed to the condensate collector lid.

1. Check daily
   - if the hydraulic coupling of the condensate drain pipe is properly fixed to the condensate collector lid.
   - if the condensate collector lid it tightly screwed on.
2. After operation of the machine, check for leakages within the machine.

   Leakages of condensate are visible.
   ➤ Check the condensate drain pipe for leaks.
   ➤ Check that the hydraulic coupling is securely fastened to the condensate collector lid.

➤ Close the door.

10.11.2 Option dd
Combination filter maintenance

Precondition The machine is switched off,
the machine is standing level,
the machine is fully vented, the pressure gauge reads 0 psig.
All compressed air consumers are disconnected and the air outlet valves are open.

PRELIMINARY
Subject to Revision

⚠ WARNING

Danger of injury from compressed air!
Filter combination is pressurized during operation. Serious injury can result from loosening or opening components under pressure.

- ➤ *Wait until the machine has automatically vented (check: pressure gauge reads 0 psig!*
- ➤ *Depressurize the combination filter.*

Option dd

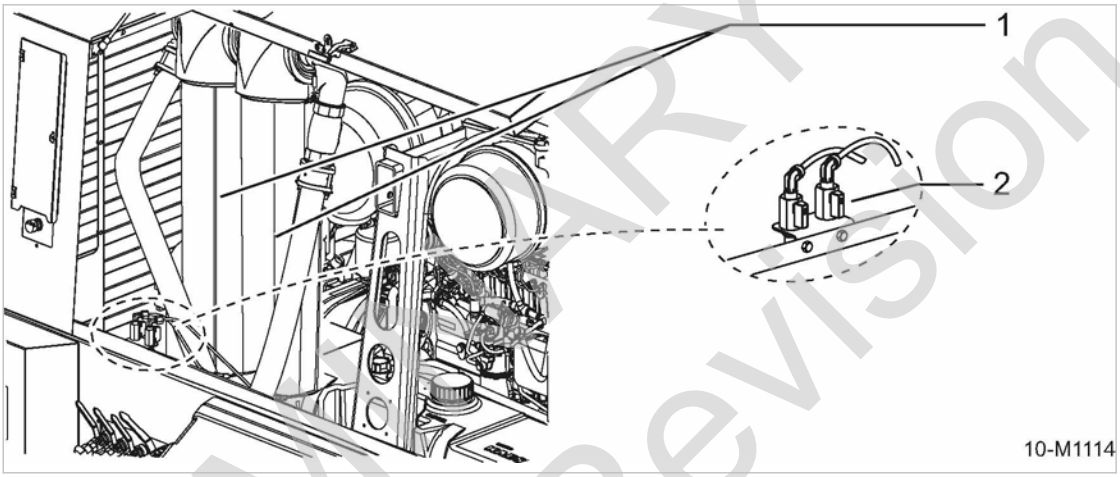

Fig. 68 Filter combination

1 Filter combination
2 Shut-off valve condensate drain

PRELIMINARY
Subject to Revision

Option dd

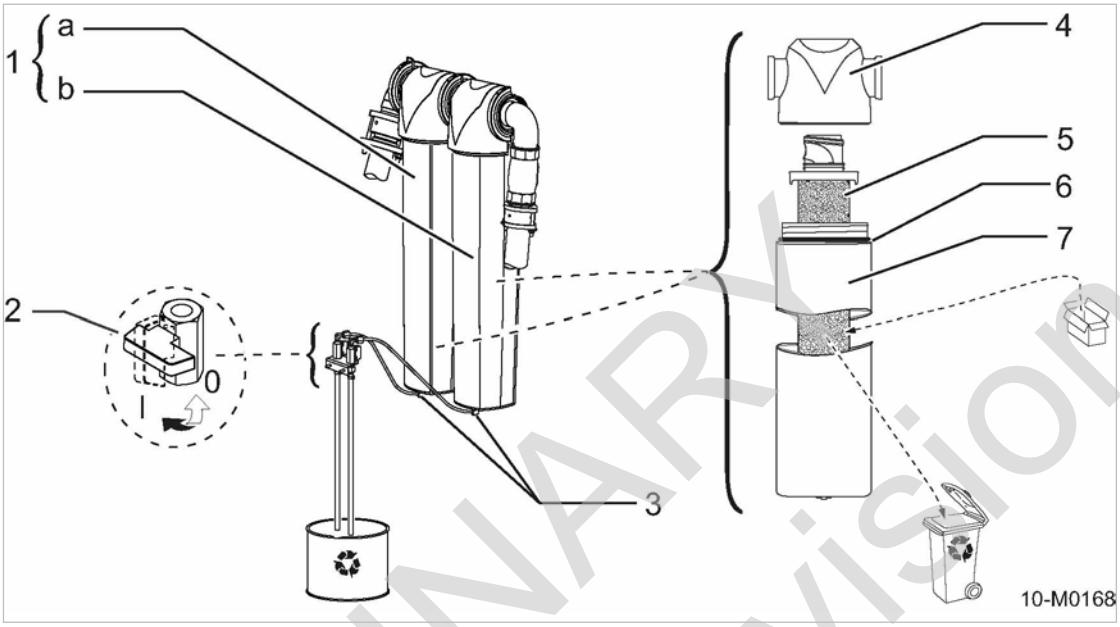

Fig. 69 Combination filter maintenance

1 Filter combination
a Pre-filter
b Fine filter (micro-filter)
2 Shut-off valves (ball valve) for condensate drain
0 – Closed
I – Open
3 Condensate drainage hose fitting
4 Filter head
5 Filter element
6 Casing gasket
7 Filter housing

➤ Open the right-hand access door.

10.11.2.1 Draining condensate

Material Receptacle
Cleaning cloth

1. Place the receptacle under the combination filter hose lines.
2. Open the pre-filter and micro-filter condensate drain shut off valves.
3. Close the door.
4. Start up the machine and run in IDLE.
   The condensate collecting in the filter housings is blown out.
5. Stop the compressor as soon as air escapes.
6. Open the right-hand access door.
7. Close the shut-off valves.
8. Close the door.

Condensate must be stored in suitable containers and disposed of in accordance with local environmental regulations.

PRELIMINARY Subject to Revision

10.11.2.2 Changing the filter elements

The pre-filter and micro-filter contain different elements and these must be changed as a pair. Note location!

Using the combination filter without an element installed is not permitted.

Handle new filter elements only with clean fabric gloves. Do not touch the new filter elements with bare fingers – Contamination risk!

Material
Spare parts
Filter wrench
Wrench
Cleaning cloth
Clean fabric gloves

Precondition
The machine has cooled down.
Negative cable to the batteries disconnected.

Ensure that the combination filter is not under pressure

➤ Slowly open the pre-filter and micro-filter condensate drain shut off valves.
Remaining pressure escapes.

Gaining access to the filter housing

➤ Loosen the screw connection of the condensate drain hoses from the filter housings of pre-filter and micro-filter and remove the drain hoses.

Changing the prefilter element

1. Unscrew the filter housing counter-clockwise.
2. Draw the filter element down and out.
3. Clean the filter head, housing and sealing surface with a lint-free cloth.
4. Check the housing gasket.
   Housing gasket is damaged: replace gasket.
5. Insert new filter element.

Wear gloves!

6. Screw on the filter housing clockwise.

Changing the pre-filter element

1. Unscrew the filter housing counter-clockwise.
2. Draw the filter element down and out.
3. Clean the filter head, housing and sealing surface with a lint-free cloth.
4. Check the housing gasket.
   Housing gasket is damaged: replace gasket.

PRELIMINARY
Subject to Revision

5. Insert new filter element.

Wear gloves!

6. Screw on the filter housing clockwise.

Putting in operation

1. Screw the condensate drain hoses to the housings of the pre-filter and the micro-filter.
2. Close the condensate drain shut-off valves.
3. Tighten the filter combination fittings.
4. Reconnect the negative cable to the batteries.
5. Close the door.

Dispose of old parts and contaminated materials according to environmental regulations.

Further information

Further information on changing filter elements can be found in the filter operating manual in chapter 13.7.

Starting the machine and performing a test run

1. Switch the machine on and run it in IDLE mode for approx. 5 minutes.
2. Shut down the machine.
3. Wait until the machine has automatically vented.
   Pressure gauge reads 0 psig!
4. Open the outlet valves.
5. Open the right-hand access door.
6. Check the combination filter housing and hose lines for leaks.
7. Close the door.

10.11.3 Option dc Fresh air filter maintenance

Before commencing work on the fresh air filter, read and understand the operating instructions given in chapter 13.8.

Precondition

The machine is switched off.
The machine is standing level.
The machine is fully vented, the pressure gauge reads 0 psig.
All compressed air consumers are disconnected and the air outlet valves are open.

PRELIMINARY Subject to Revision

Option dc

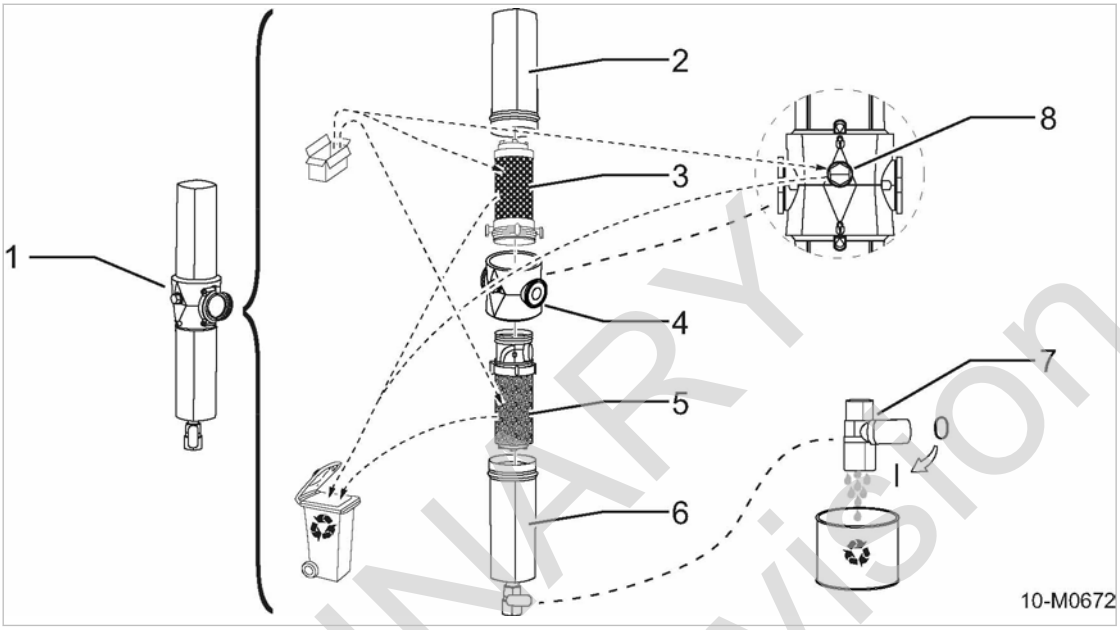

Fig. 70 Fresh air filter maintenance

1. Fresh air filter
2. Upper housing
3. Upper element (adsorption element)
4. Body
5. Lower filter element (high capacity element)
6. Lower housing
7. Drain valve (condensate drain for manual draining)
   0 - Closed
   I - Open
8. Oil indicator

➤ Open both doors.

10.11.3.1 Draining condensate

Material Receptacle
Cleaning cloth

1. Place the receptacle below the fresh air filter condensate drain point.
2. Open the condensate drain valve.
3. Close the doors.
4. Switch the machine on and run it in IDLE mode for approx. 2 minutes.
   The condensate collecting in the filter housings is blown out.
5. Shut down the machine.
6. Open both doors.
7. Close the drain valve.
8. Carefully remove the receptacle.
9. Close the doors.

Condensate must be stored in suitable containers and disposed of in accordance with local environmental regulations.

PRELIMINARY Subject to Revision

10.11.3.2 Checking the oil indicator

The fresh air filter is fitted with an oil indicator. When the indicator is blue, the filtration function can no longer be ensured and the filter must not be used. Both filter elements and the oil indicator must be changed (regardless of the maintenance schedule).

The oil indicator must be checked at least once daily.

The oil indicator does not give information on the filter element changing interval.

➤ Check the oil indicator.

Indicator is blue: Replace both filter elements + oil level indicator.

10.11.3.3 Changing consumable parts

The fresh air filter contains two different elements which must be changed as a pair. Note location!

Using the fresh air filter without installed filter elements is not permitted!

Handle new filter elements only with clean fabric gloves. Do not touch the new filter elements with bare fingers – Contamination risk!

Material
Spare parts
Filter wrench
Wrench
Cleaning cloth
Clean fabric gloves

Precondition
The machine has cooled down.
Negative cable to the batteries disconnected.

Ensure the fresh air filter is depressurized

➤ Open the fresh air filter drain tap to release any remaining pressure.

Changing the lower filter element (high performance element)

1. Unscrew the lower housing counter-clockwise.
2. Draw the filter element down and out.
3. Clean the lower housing and sealing surface with a lint-free cloth.
4. Check the housing gasket.
   Housing gasket is damaged: replace gasket.
5. Insert a new lower filter element.

Wear gloves!

6. Screw on the lower housing clockwise.

Change the upper filter element (adsorption insert)

1. Unscrew the upper housing counter-clockwise.
2. Draw the filter element up and out.
3. Clean the lower housing and sealing surface with a lint-free cloth.

PRELIMINARY Subject to Revision

4. Check the housing gasket.
   Housing gasket is damaged: replace gasket.
5. Insert a new filter element.

Wear gloves!

6. Screw on the upper housing clockwise.

Replace the oil indicator

1. Unscrew the oil indicator.
2. Clean the housing and sealing surface with a lint-free cloth.
3. Screw in the new oil indicator.

Putting in operation

1. Close the drain valve.
2. Reconnect the negative cable to the batteries.
3. Close the doors.

Dispose of old parts and contaminated materials according to environmental regulations.

Further information: Further information on changing elements can be found in the "operating instructions for pressurized air filters (fresh air filters)" in chapter 13.8.

Starting the machine and performing a test run

1. Switch the machine on and run it in IDLE mode for approx. 5 minutes.
2. Shut down the machine.
3. Wait until the machine has automatically vented.
   Pressure gauge reads 0 psig!
4. Open the discharge valves.
5. Open both doors.
6. Check the fresh air filter housing and hose line for leaks.
7. Close the doors.

10.11.4 Option Ib
Engine air shut-off valve maintenance

Material: Compressed air for blowing out
Petroleum ether or spirit
Cleaning cloths

Precondition: The machine is switched off.
The machine is fully vented, the pressure gauge reads 0 psig.
The machine has cooled down.
All compressed air consumers are disconnected and the air outlet valves are open.

PRELIMINARY Subject to Revision

NOTICE

Adjusted engine air intake shut-off valve
The engine air intake shut-off valve does not close when flammable gas is drawn into the engine:
The machine does not shut down? Destruction of the engine and explosion and/or fire are possible.

- ➤ *Do not move the valve adjusting screw.*
- ➤ *Have the valve set by a specialist workshop or KAESER SERVICE.*

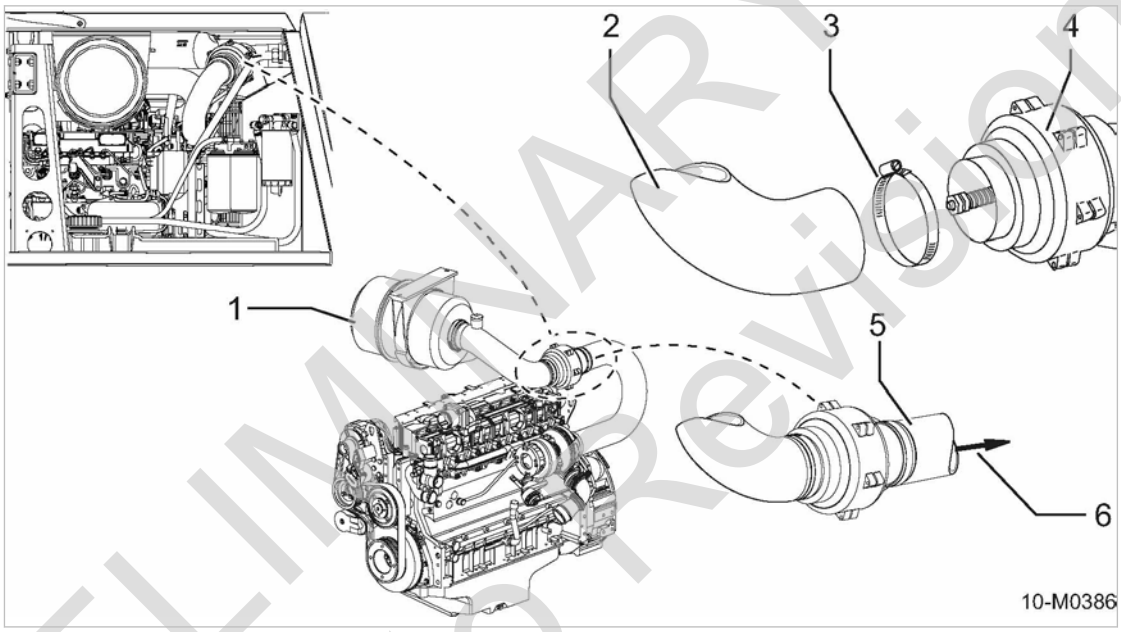

Fig. 71 Engine air shut-off valve maintenance

1	Motor air filter	4	Engine air shut-off valve
2	Air inlet hose (air filter side)	5	Air inlet hose (engine side)
3	Hose clamp	6	Engine air intake

➤ Open both doors.

Clean the engine air shut-off valve

1. **NOTICE** *The engine air intake shut-off valve does not close fully.*
   The machine does not shut down? Destruction of the engine and explosion and/or fire are possible.
   - ➤ *Do not grease the valve, as this may cause a build up of dust and valve sticking.*
2. Loosen the hose clamp on the filter side of the valve and turn the air intake hose to one side.
3. Check if the interior of the shut-off valve is clean.
   Engine shut-off valve is clogged: Blow out with compressed air.

   If necessary, clean the valve with cleaning fluid or spirit and allow to dry.
   If dirt cannot be removed: Contact specialist workshop or KAESER SERVICE.

PRELIMINARY
Subject to Revision

Checking the engine air intake shut-off valve for correct function and movement

1. Check the valve for signs of excessive wear.
2. Check that the valve plate closes fully and easily.

Result When severe wear or function problems are apparent: Have the engine air intake valve replaced.

1. Reposition the air intake hose and tighten the clamp.
2. Close the doors.
3. Start the machine and switch to LOAD operation.

   The engine stops in LOAD operation: Have the engine air intake valve checked by a specialist workshop or KAESER SERVICE.

10.11.5 Option oe Draining liquid accumulation within the machine

The so-called "closed floor pan" contributes to the protection of the environment by preventing a contamination of the soil in the event of leaking operating fluids.
Liquid accumulations within the machine's body can also cause corrosion or electrical faults.
Liquid accumulations must be removed as quickly as possible to avoid any faults of the machine.
For draining the liquids, the machine's floor panel been fitted with service openings which are sealed with sheet metal covers or closed with bungs.

Material Oil receptacle

Cleaning cloths

Precondition The machine is switched off.

The machine is standing level.

The machine is secured against moving.

The machine is fully vented, the pressure gauge reads 0 psig.

The machine has cooled down.

All compressed air consumers are disconnected and the air outlet valves are open.

1. Place a receptacle underneath the service opening(s).
2. Remove the sheet metal cover(s) or unscrew the bung from the service opening (beneath the fuel tank).

   The liquid will drain.
3. Clean the sheet metal cover(s) and/or bungs and service openings.
4. Replace and properly seal the sheet metal cover(s) and/or screw in the bungs.

   The machine body is sealed.
5. Using the cleaning cloth, remove any dirt within the machine.

Dispose of collected liquid and contaminated working materials according to applicable environmental protection regulations.

10.11.6 Fit the flexible pipe connection

With the machine stopped, the clamping bolts must be freely movable by hand and parallel with the pipe.

In LOAD operation, all clamping bolts must be equally loaded.

➤ Replace the self-locking nuts.

PRELIMINARY Subject to Revision

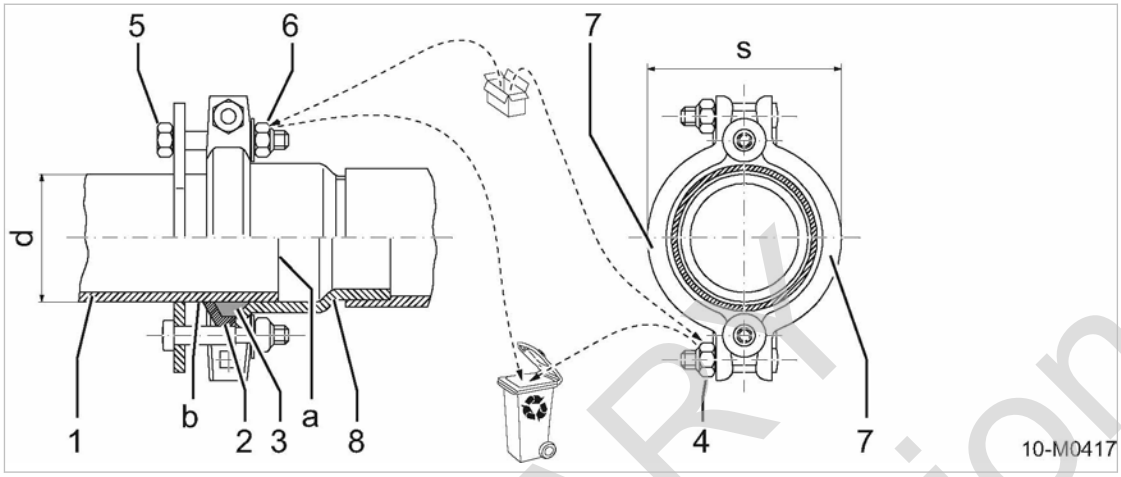

Fig. 72 Fit the flexible pipe connection

1	Pipe	7	Pipe clamp halves
2	Seal holder	8	Sleeve
3	Gasket (seal ring)	a	Pipe cut edge
4	Self-locking nut	b	Pipe sealing surface
5	Clamping screw	d	Pipe diameter (outside)
6	Self-locking nut	s	Dimension of the flexible pipe joint under tension.

Precondition The components to be connected must be flush-aligned.

The pipe must be deburred and the sealing face clean and undamaged. Point-shaped small concavities can be ignored, the axial direction must not exhibit any grooves.

1. Slide the seal holder 2 and gasket 3 over the pipe 1.
2. Slide the pipe end 8 into the bush without pretension.
3. Ensure proper alignment of the pipe and push the sealing ring with sealing holder up to the beveled edge of the sleeve.
4. Lay the pipe clamp halves 7 over the seal holder 2 and bush 8 and tighten the self-locking nuts 4 until the dimension s is reached.

Pipe diameter: d [in]	Clamp diameter: s [in]
2.36	3.72

Tab. 87 Dimensions of the flexible pipe connection

5. Tighten up the clamping bolts 5 with the self-locking nuts 6.
   It must be just possible to manually move the screw connections.

PRELIMINARY
Subject to Revision

10.12 Documenting maintenance and service work

Machine model/part number:

➤ Enter maintenance and service work carried out in this list.

Date	Maintenance task carried out	Operating hours	Signature

Tab. 88 Maintenance log

PRELIMINARY
Subject to Revision

11 Spares, Operating Materials, Service

11.1 Note the nameplate

The nameplate contains all information to identify your machine. This information is essential to us in order to provide you with optimal service.

➤ Please give the information from the nameplate with every inquiry and order for spares.

11.2 Ordering consumable parts and operating fluids/materials

KAESER consumable parts and operating materials are original products. They are specifically selected for use in our machines and ensure trouble-free operation.

Unsuitable or poor-quality consumable parts and operating fluids/materials may result in damage to the machine or significantly impair its proper function.

Personal injury may result from damage.

⚠ WARNING

There is risk of personal injury or damage to the machine resulting from the use of unsuitable spares or operating fluids/materials!

➤ *Use only original parts and operating fluids/materials.*

➤ *Do not use alternative consumable parts and operating fluids and materials.*

Compressor

Name	Number/quantity	Number
Air filter element	1	1260
Compressor oil filter	1	1210
Oil separator cartridge (complete set)	1	1450
Cooling oil	1	1600

Tab. 89 Compressor consumables

DEUTZ engine parts

Name	Number/quantity	Number
Air filter element	1	1280
Fuel prefilter (filter cartridge at the water separator)	1	1915
Fuel filter (cartridge)	2	1920
Engine oil filter (cartridge)	1	1905
Oil drain seal	1	4496
Injector nozzle	1	4475
Injector nozzle seal	1	4476
Engine belt	1	4470

PRELIMINARY Subject to Revision

Name	Number/quantity	Number
Engine oil	1	1925

Tab. 90 Consumable engine parts

Option dd **Filter combination**

Name	Number/quantity	Number
Filter element for prefilter	1	1550
Filter element for micro-filter	1	1551
Casing gasket	2	1548

Tab. 91 Replacement parts, combination filter

Option dc **Fresh air filter**

Name	Number/quantity	Number
Filter elements, fresh air filter (Filter kit)	1	1549
Indicator insert	1	3930

Tab. 92 Replacement parts, fresh air filter

11.3 KAESER AIR SERVICE

KAESER AIR SERVICE offers:

- Authorized service technicians with KAESER factory training.
- Increased operational reliability ensured by preventive maintenance.
- Energy savings achieved by avoidance of pressure losses.
- The security of genuine KAESER spare parts.
- Increased legal certainty as all regulations are kept to.

➤ Why not sign a KAESER AIR SERVICE maintenance agreement.
The advantages:
Lower costs and higher compressed air availability.

11.4 Replacement parts for service and repair

With the help of the parts list you can plan your material requirement according to operating conditions, and order the spare parts you need.

PRELIMINARY
Subject to Revision

⚠ WARNING

Personal injury or machine damage due to incorrect working on the machine!
Incorrect inspection, service or repair can damage the machine or severely impair its function. Personal injury may result from damage.

- *Inspections, preventive maintenance or repair tasks not described in this manual must not be carried out by unqualified personnel.*
- *Have further tasks, not described in this operating manual, carried out by motor vehicle workshops or by an authorized KAESER service representative .*

PRELIMINARY
Subject to Revision

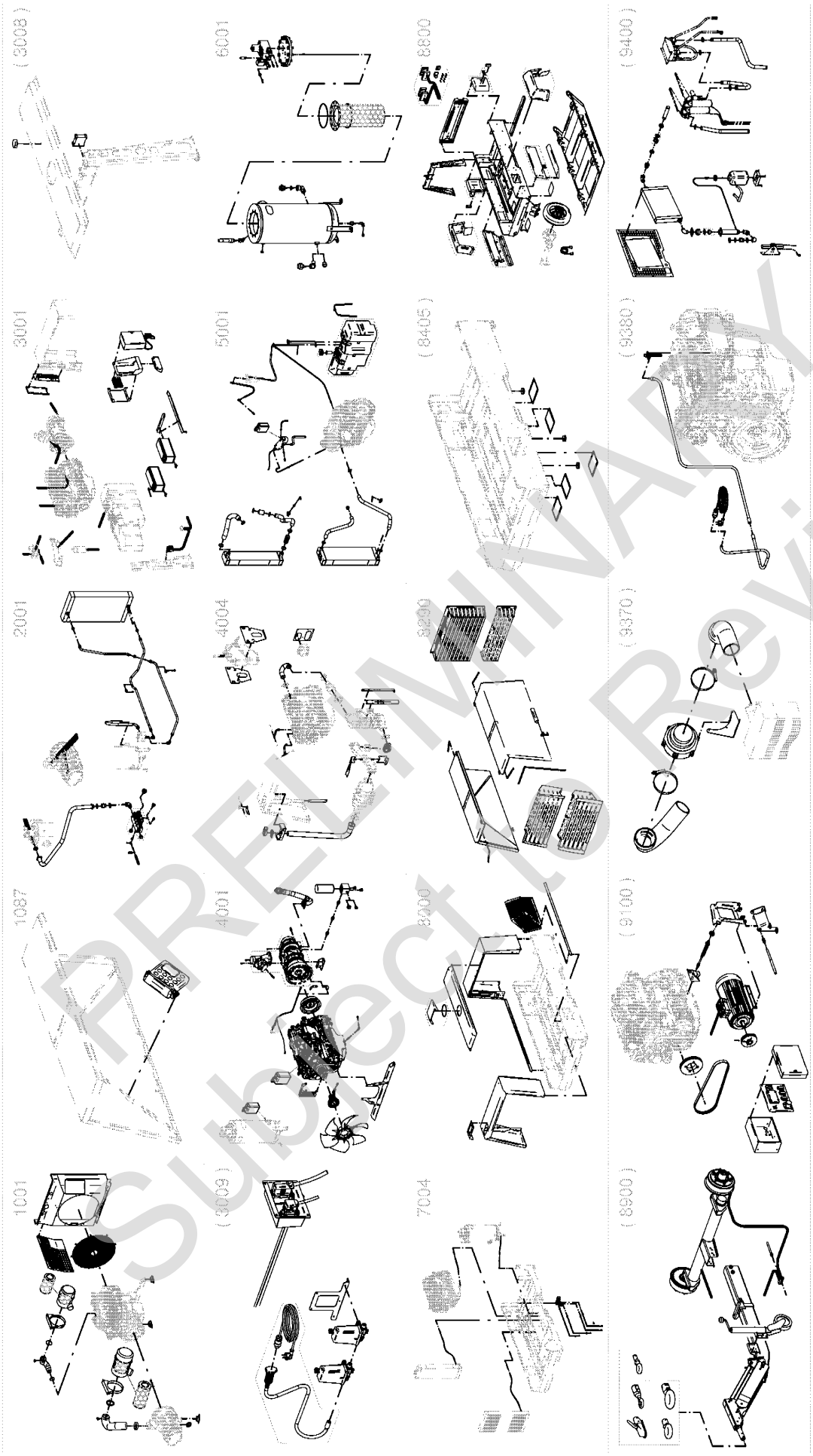

Dieses Dokument ist nicht vertraulich. Trotzdem ist es nicht für die Weitergabe bestimmt. Es darf weder reproduziert noch in Auftrag gegeben werden, es sei denn, dies ist ausdrücklich erlaubt oder wird durch die Rechte des Eigentümers gestattet. Verstöße verpflichten zu Schadensersatz. Alle Rechte sind vorbehalten.

Das Dokument ist ausschließlich für den Eigentümer bestimmt. Es darf nur von dem Zweck, wofür es bestimmt ist, und auf keine andere Zwecke verwendet werden. Kopien oder sonstige Vervielfältigungen sind nur für Speicherung, Verarbeitung oder Verwendung innerhalb Systems zulässig. Verwendung oder Übertragung an Dritte ist zu diesem Zweck nicht zulässig. Weiter Organe von Handelsregistern dürfen Daten ausgeben, wenn es zulässig ist. Wiederzugang ist gestattet.

Baugruppe

Overview / Übersicht

Zeichnungstyp	Dokument Nr.	Original	Datum	Name	Erstellt mit
Service spare part drawing / Service Ersatzteil Zeichnung		A4	24.01.2018	Pfuff	Solid Edge
SEG-Nummer	Service-Kit	Maßstab	25.01.2018	Pfuff	Blatt
SEG-6865_01	Service-Kit (Option) / Subassembly / Untergruppe	Status	freigegeben		1 von 1

KAESER KOMPRESSOREN

PRELIMINARY
Subject to Revision

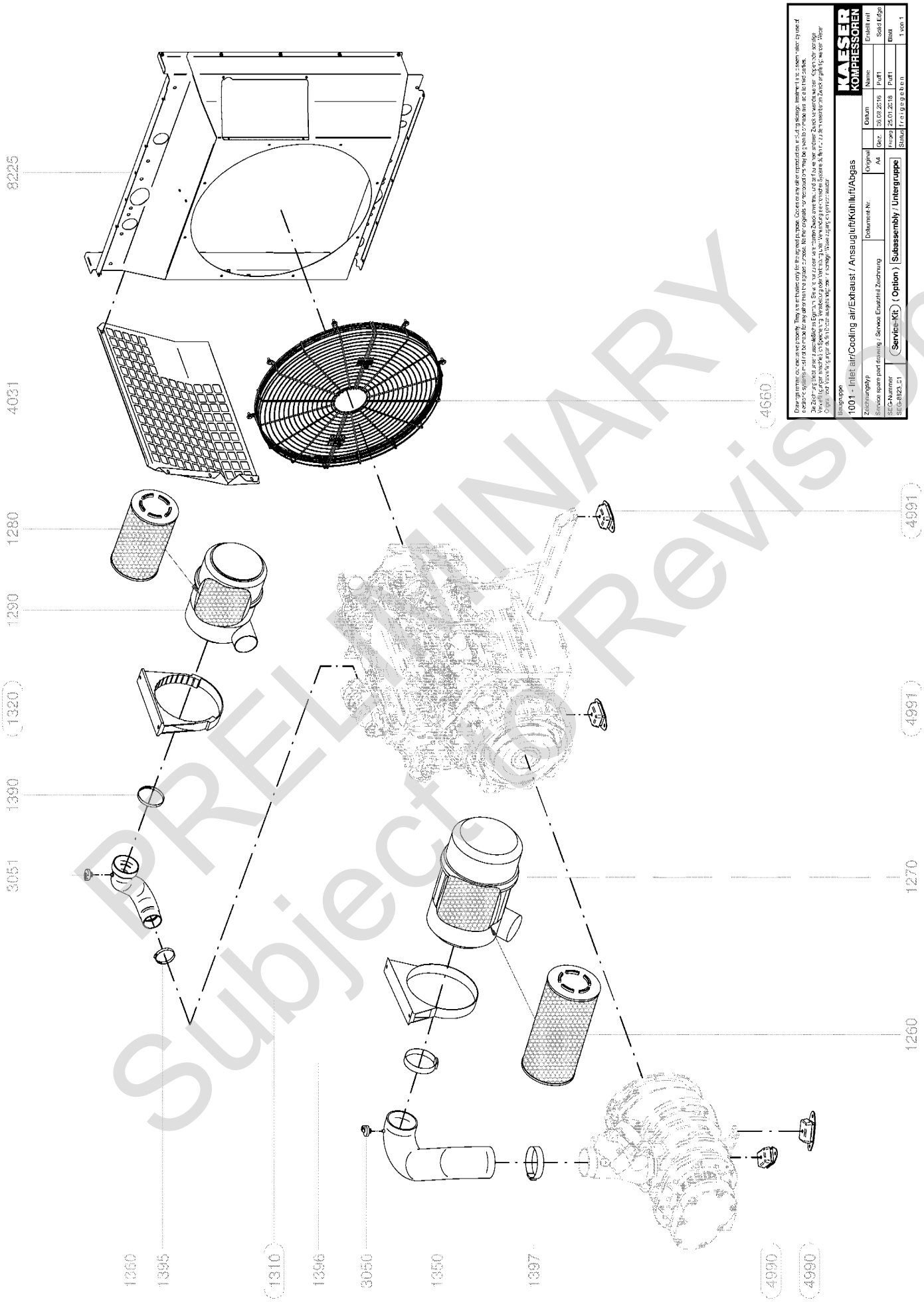

PRELIMINARY
Subject to Revision

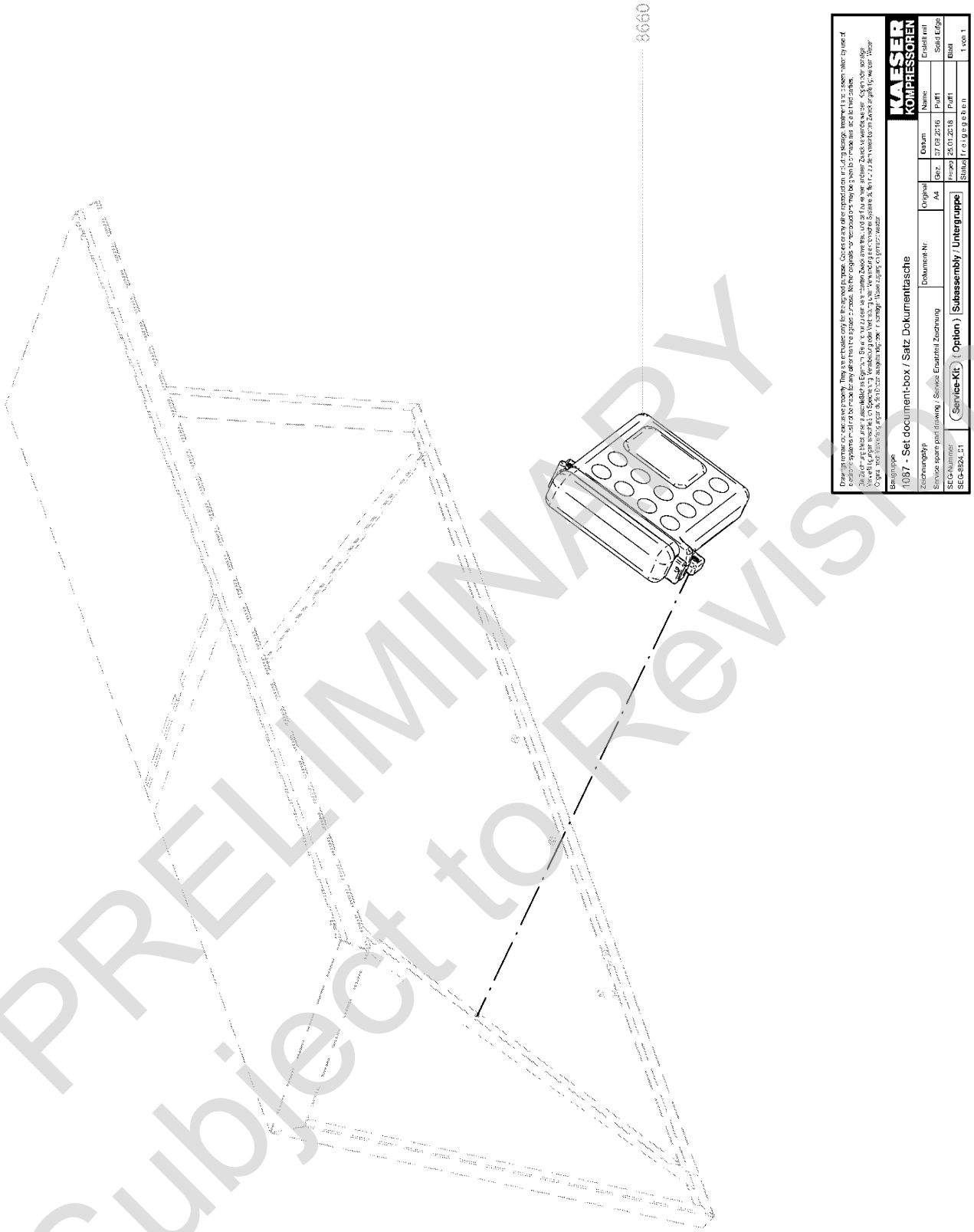

PRELIMINARY
Subject to Revision

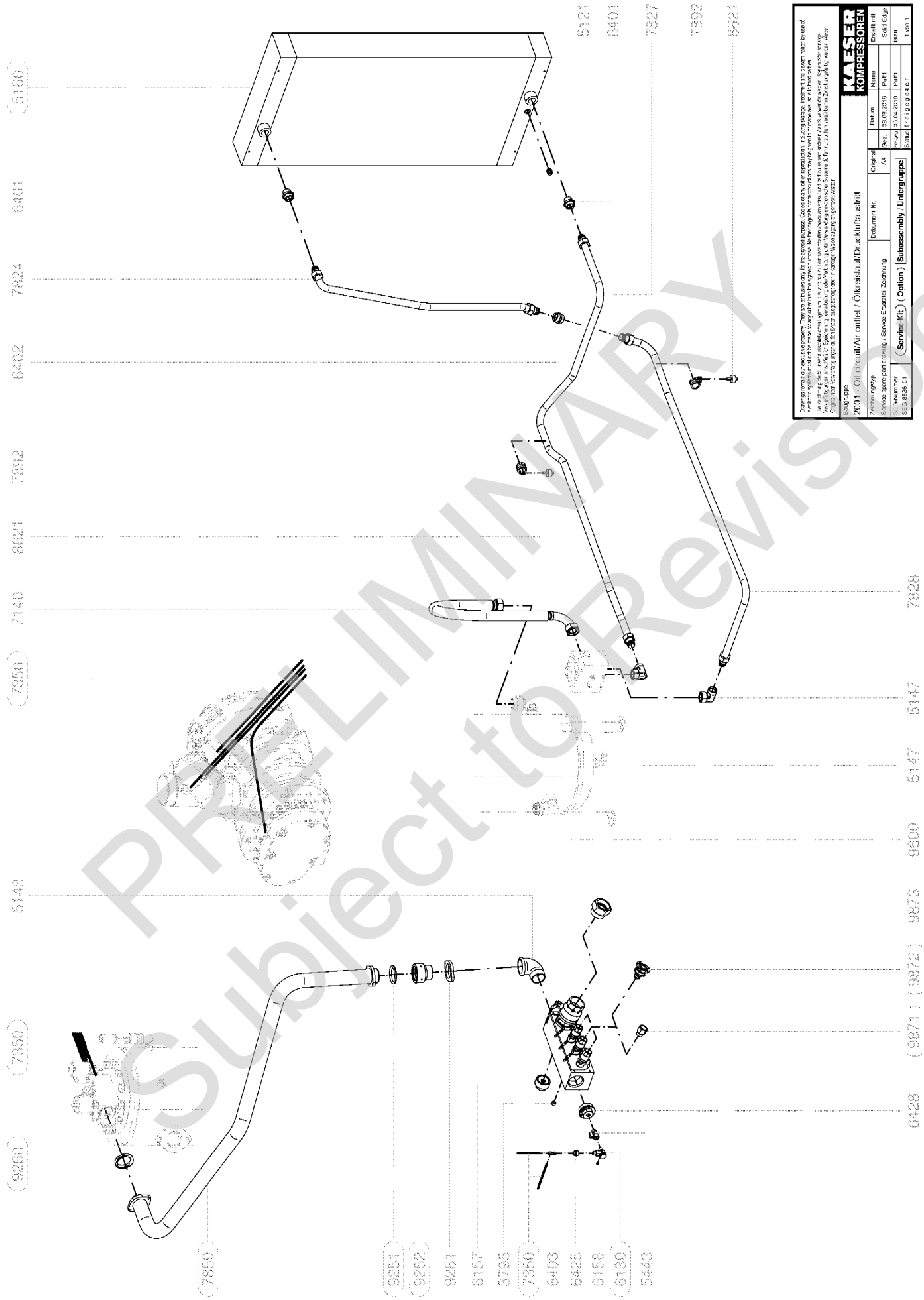

PRELIMINARY
Subject to Revision

Service-Kit

SEG-2666_01

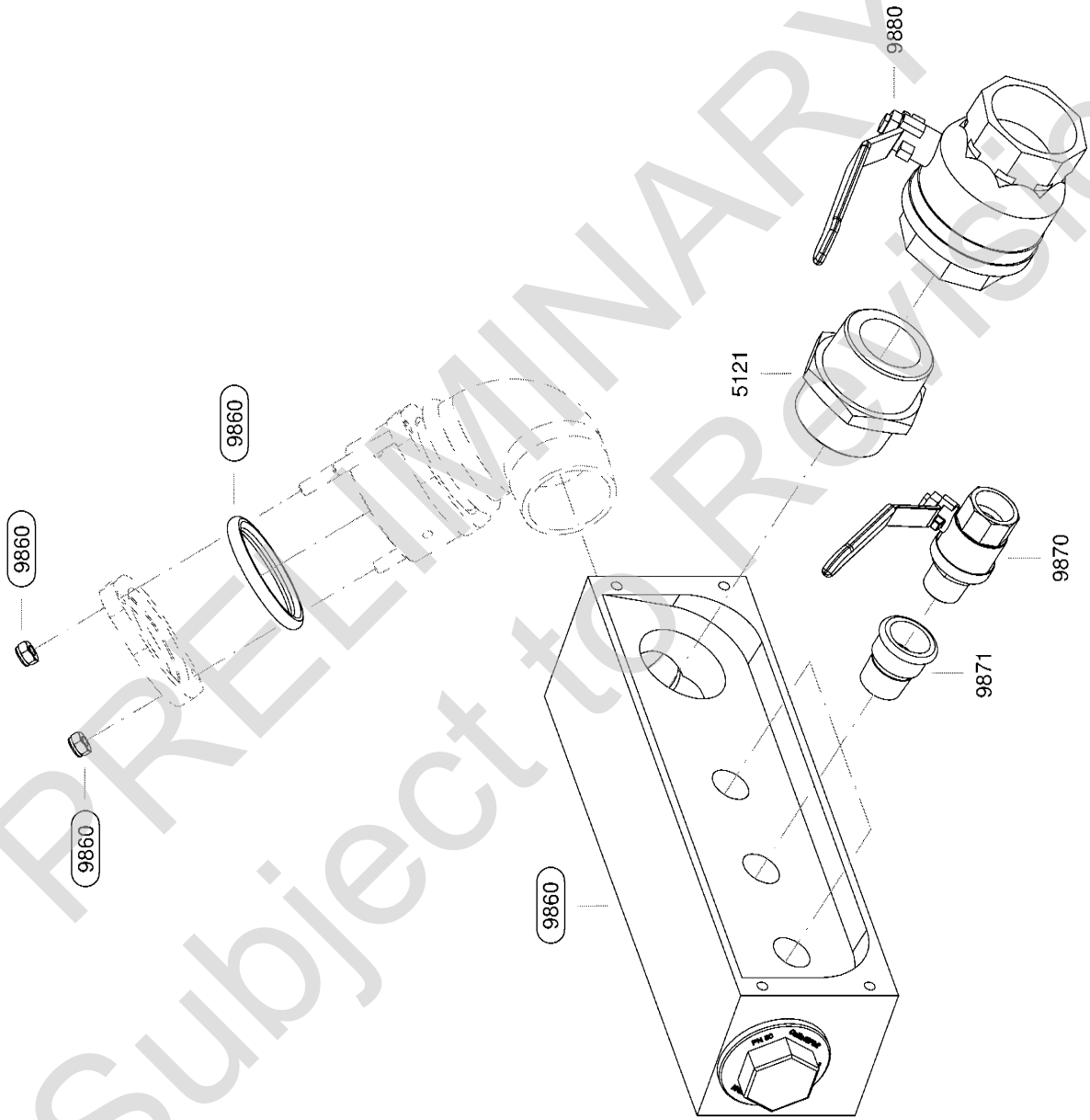

PRELIMINARY
Subject to Revision

Service-Kit

SEG-2671_01

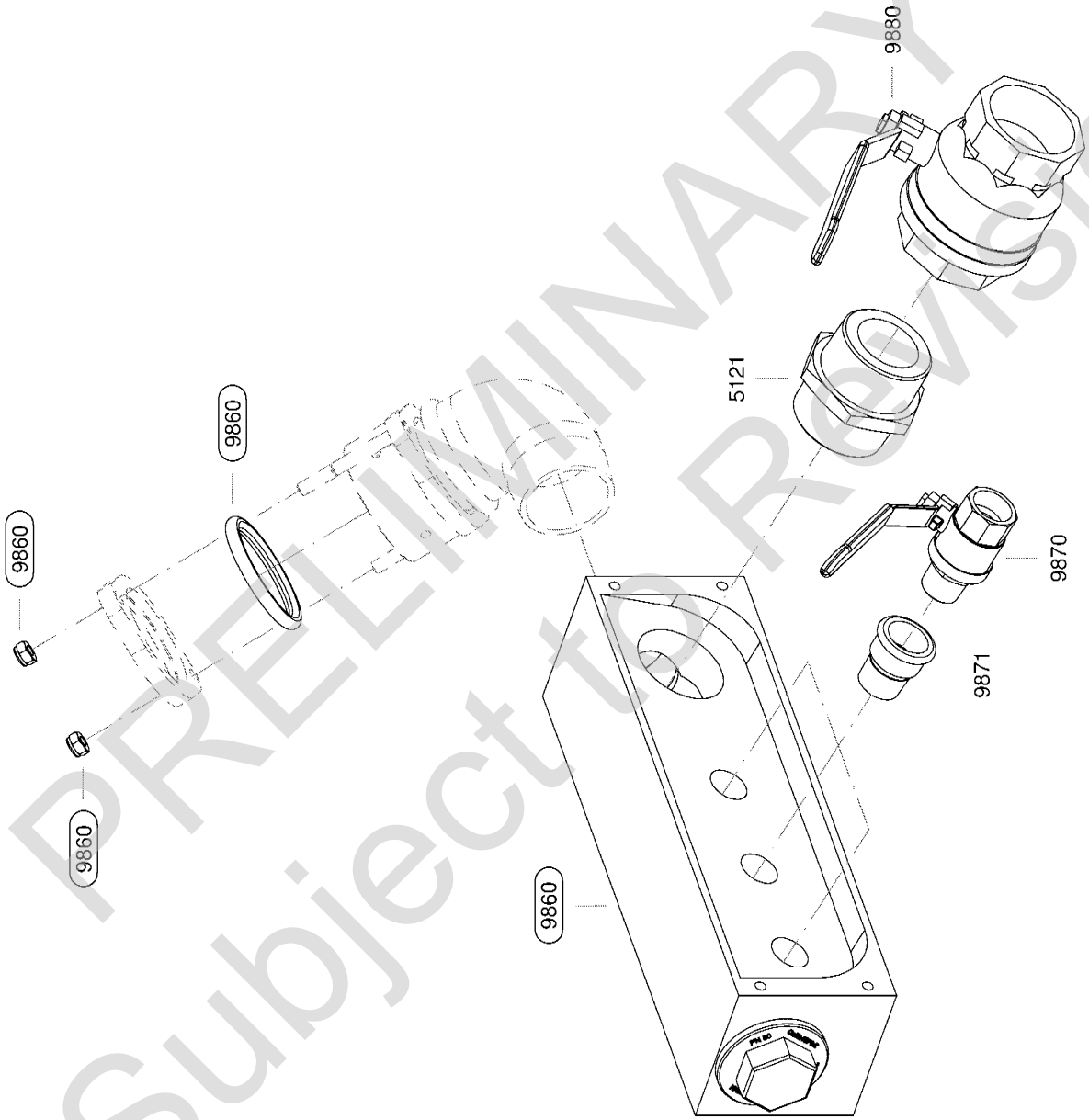

PRELIMINARY
Subject to Revision

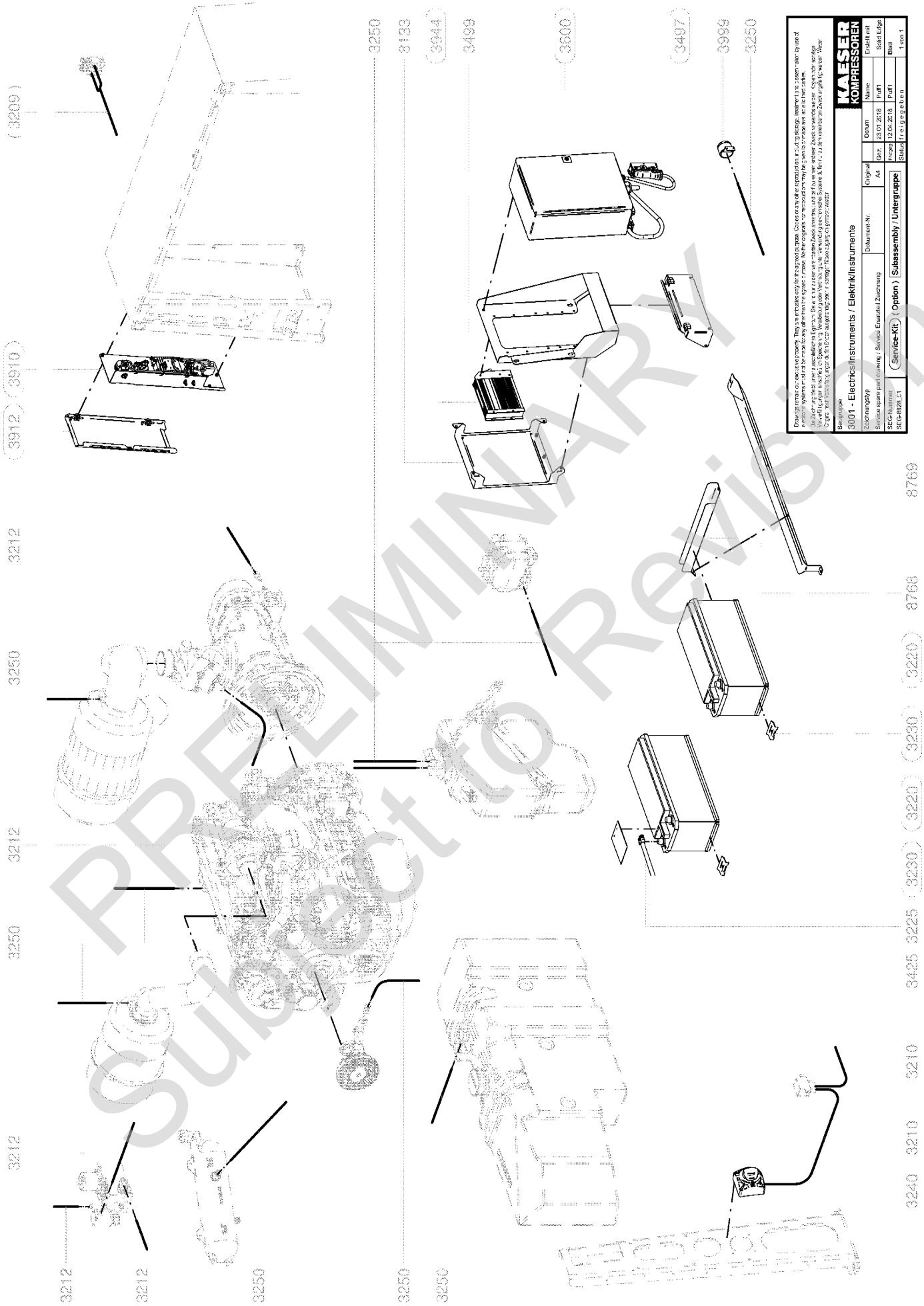

PRELIMINARY
Subject to Revision

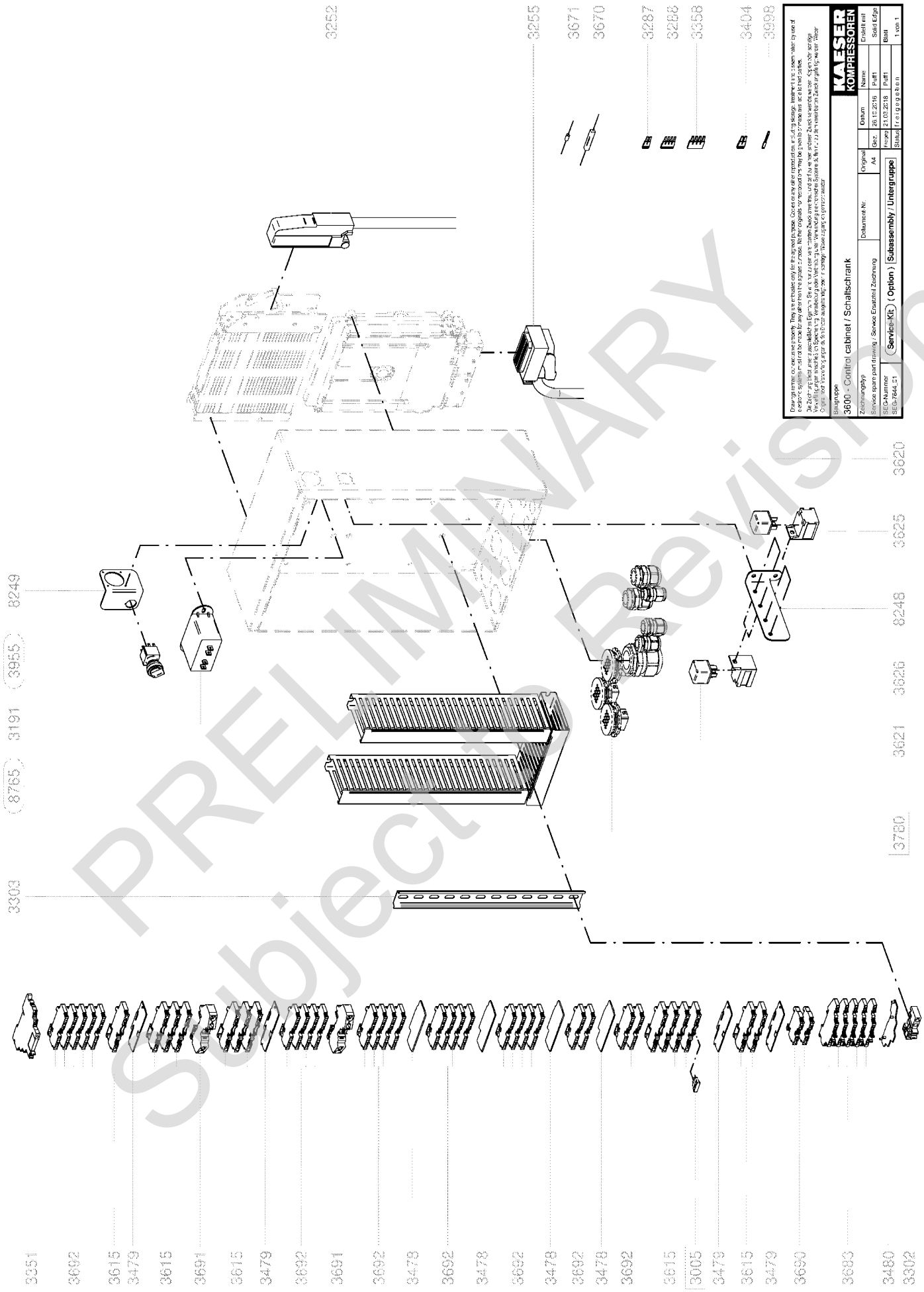

PRELIMINARY
Subject to Revision

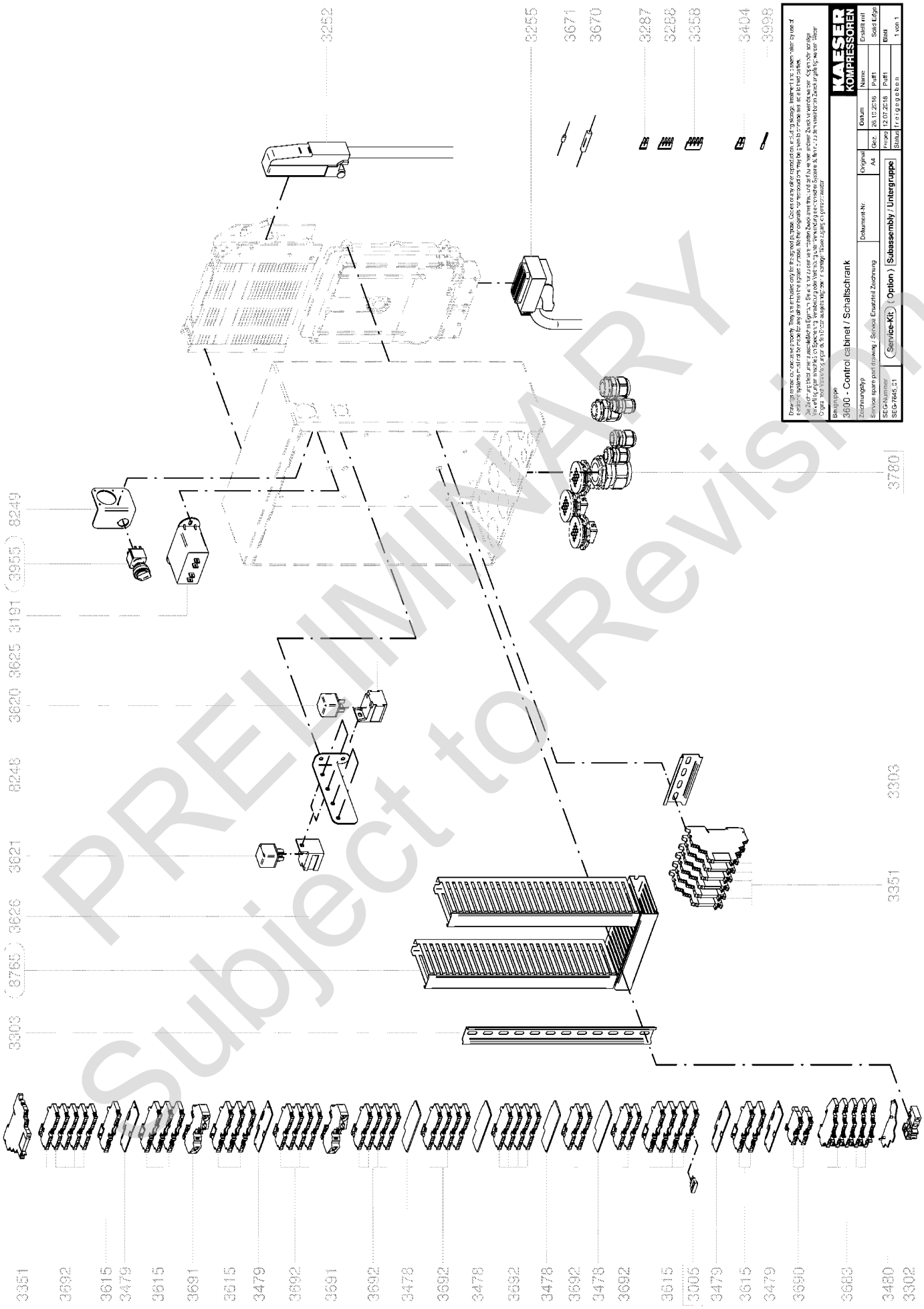

PRELIMINARY
Subject to Revision

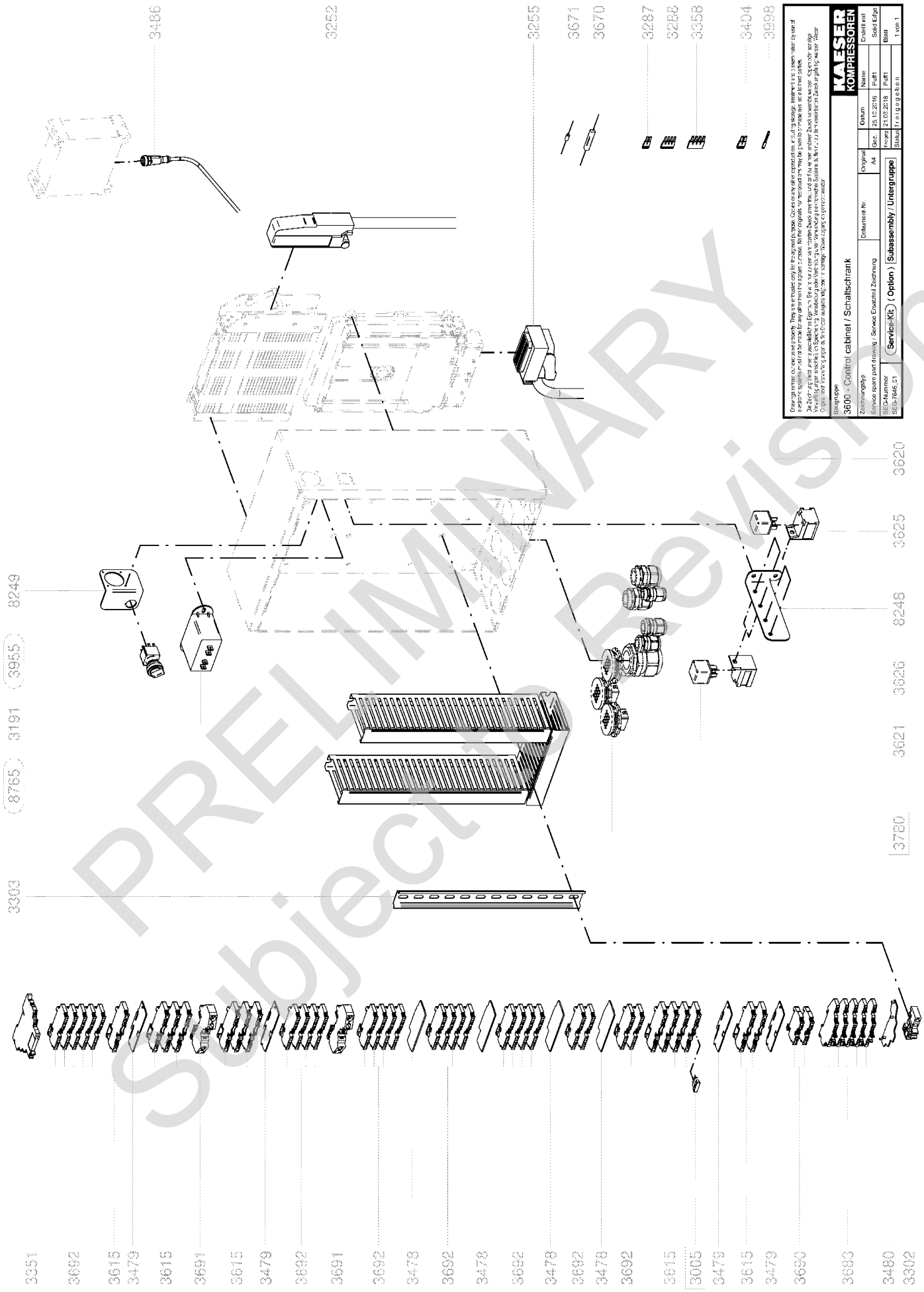

PRELIMINARY
Subject to Revision

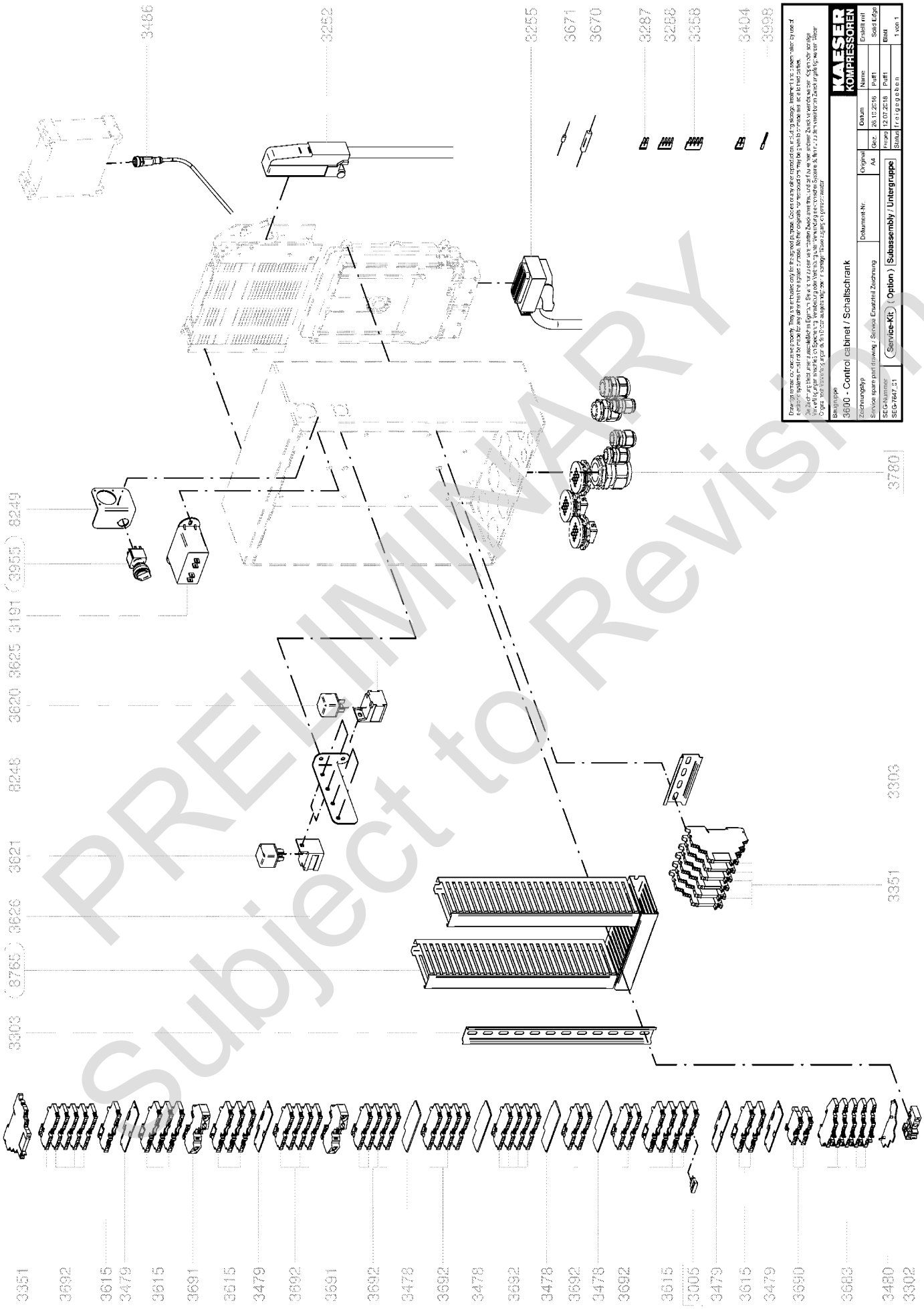

PRELIMINARY
Subject to Revision

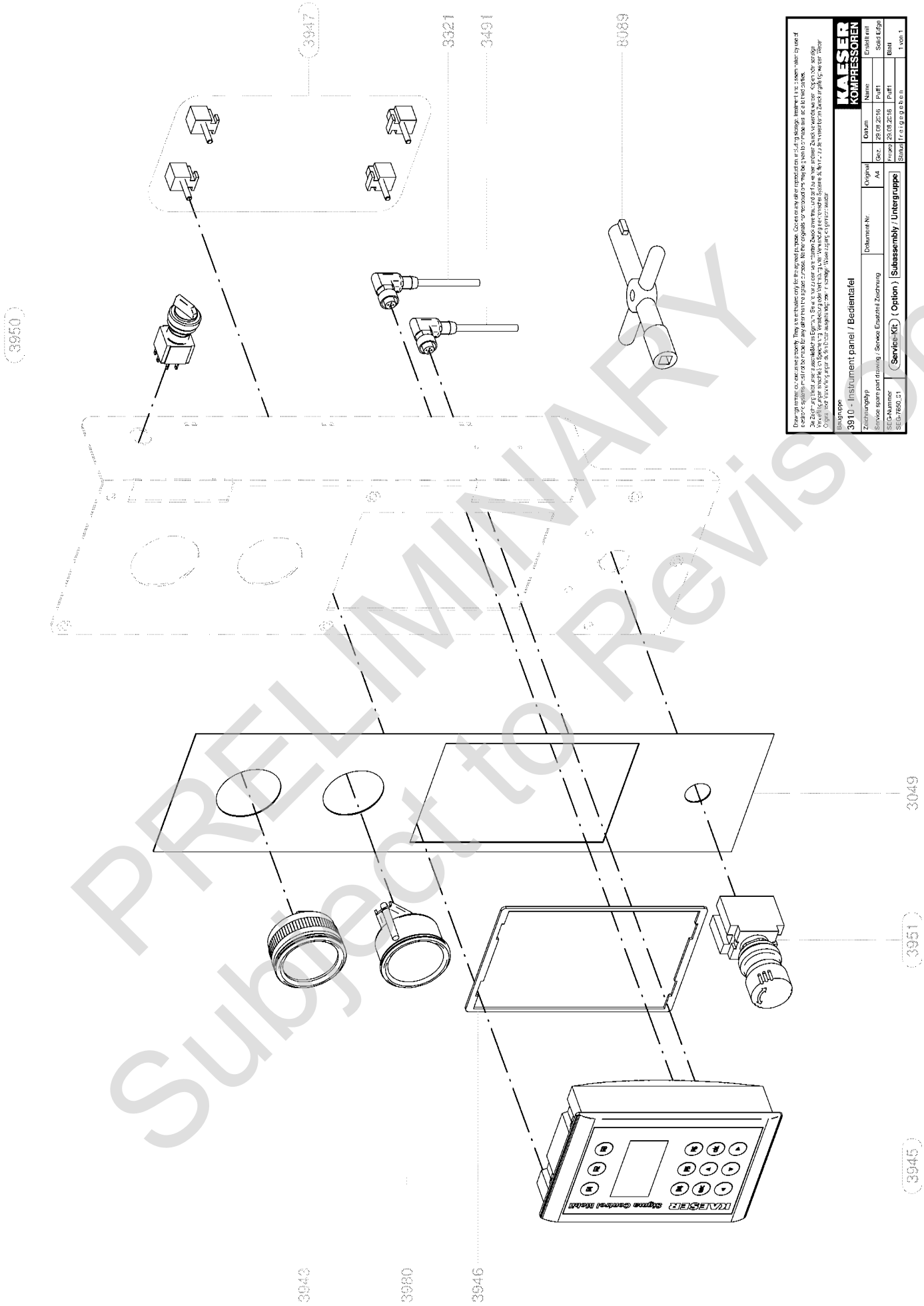

PRELIMINARY
Subject to Revision

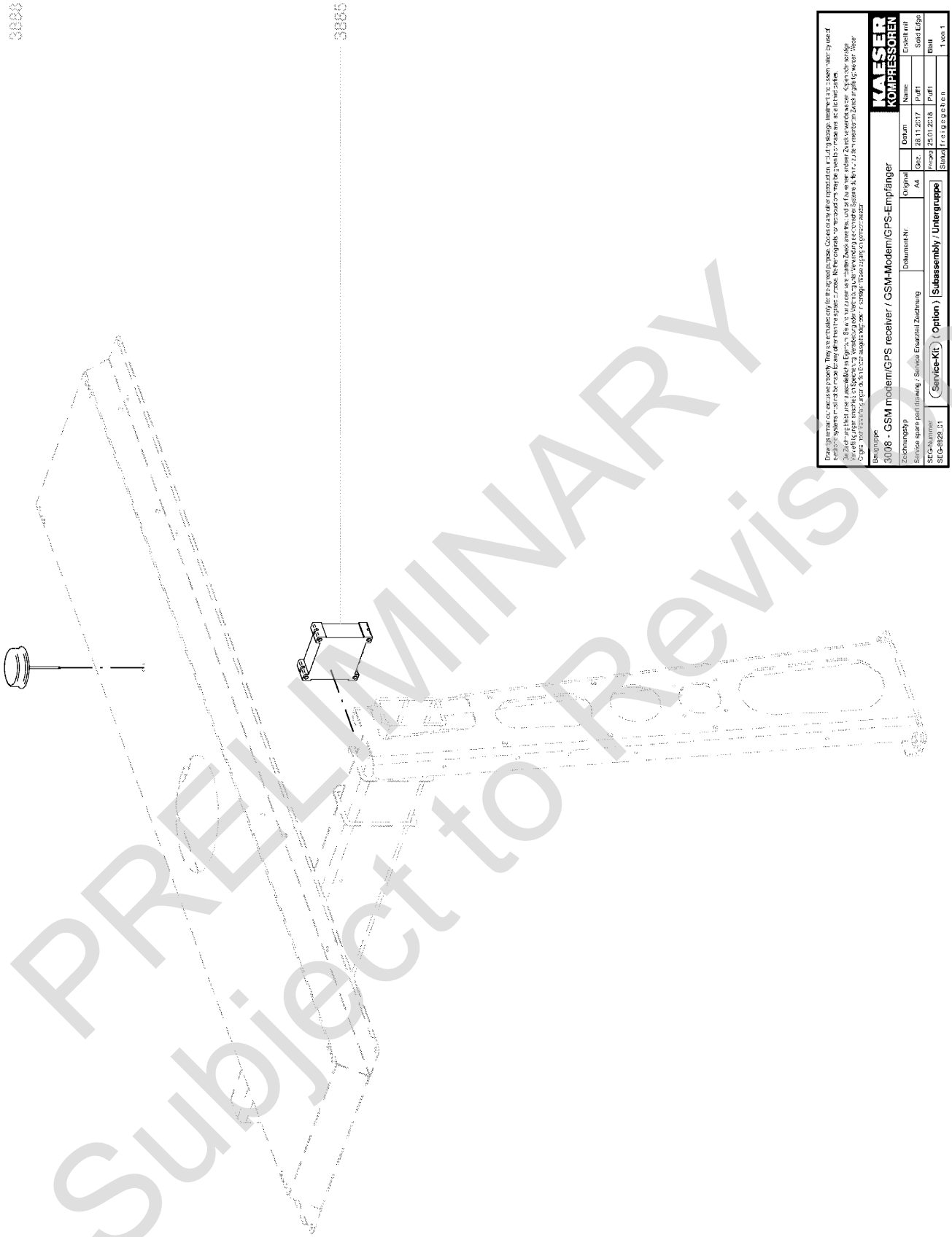

PRELIMINARY
Subject to Revision

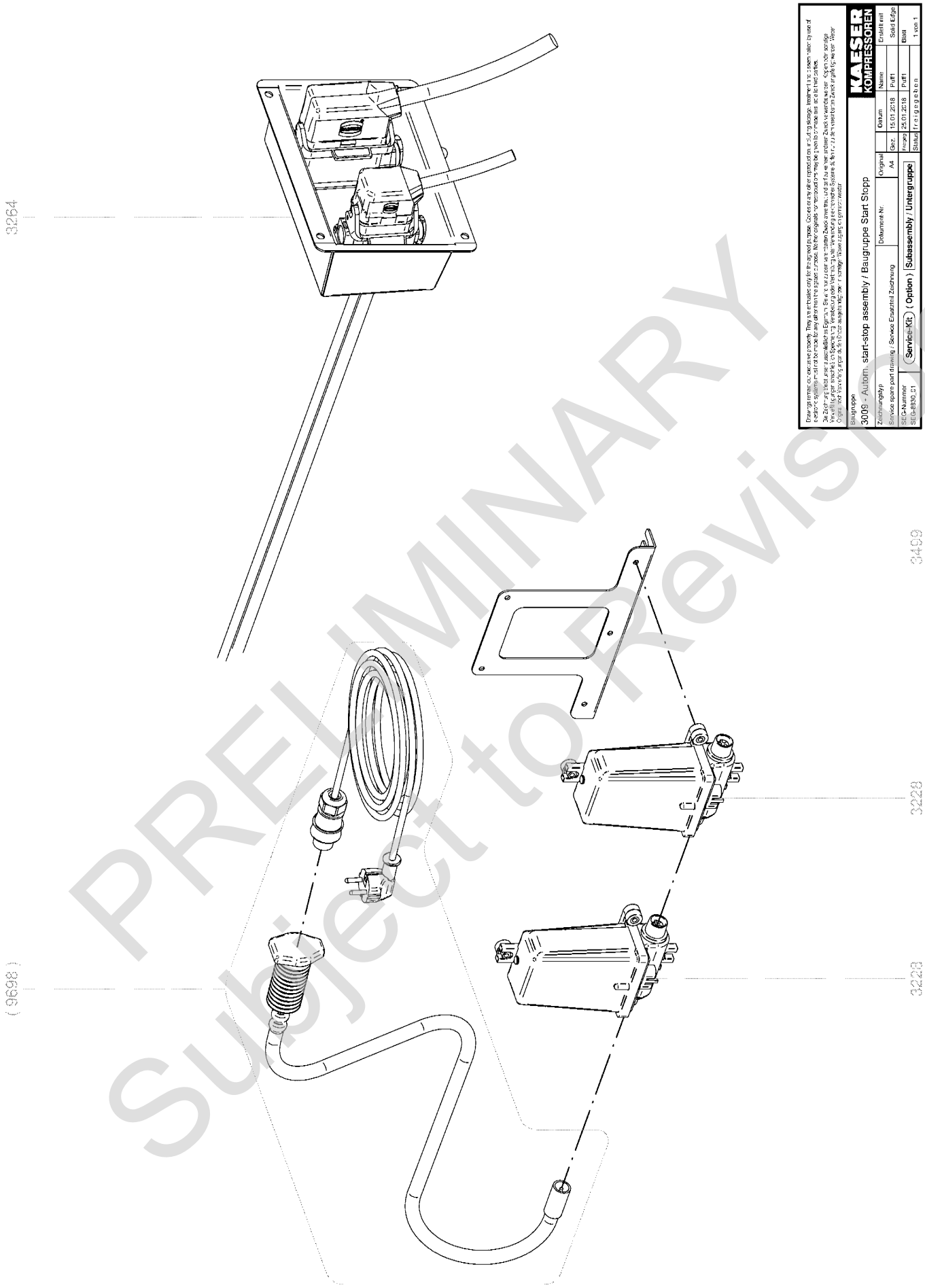

PRELIMINARY
Subject to Revision

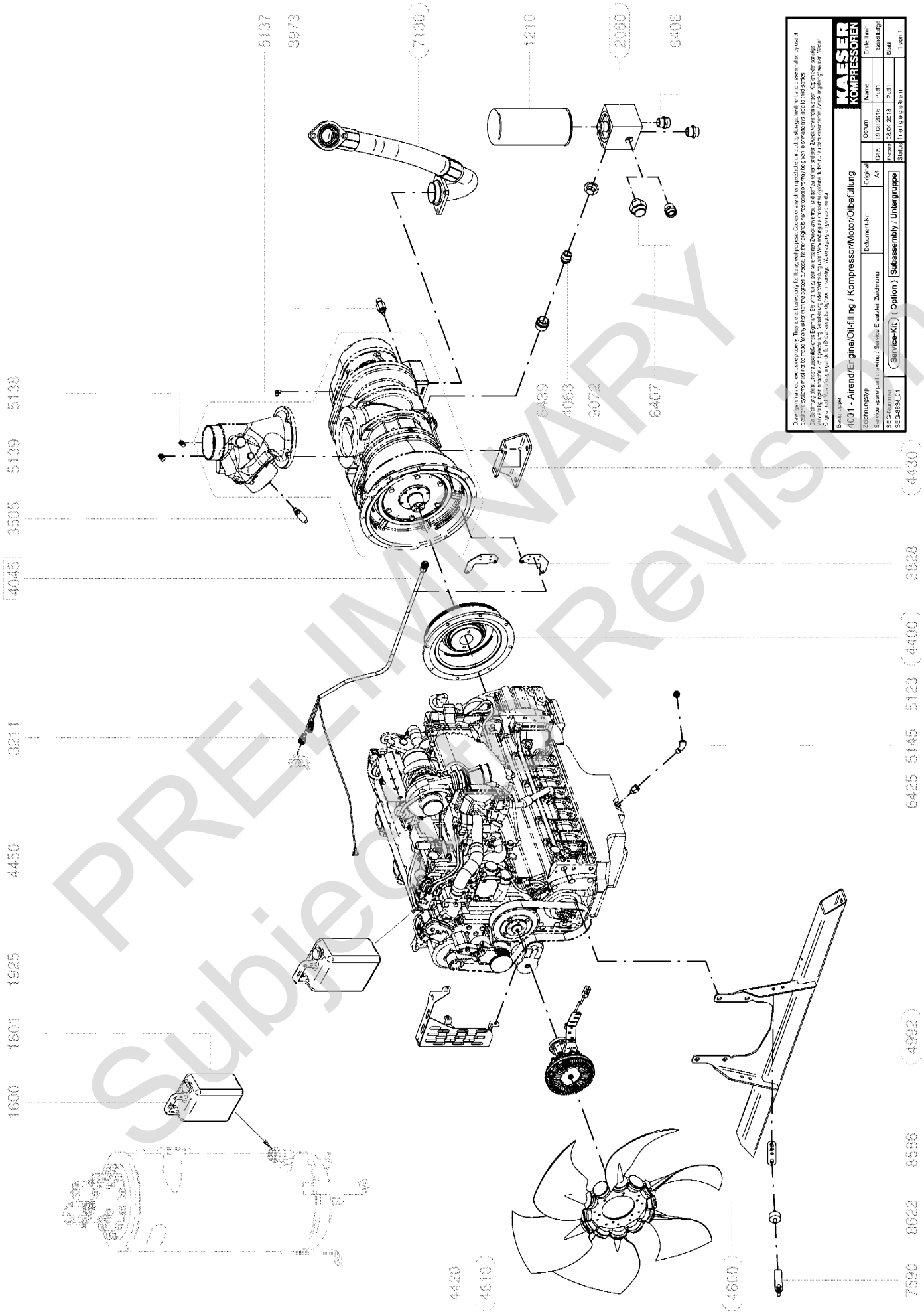

PRELIMINARY
Subject of Revision

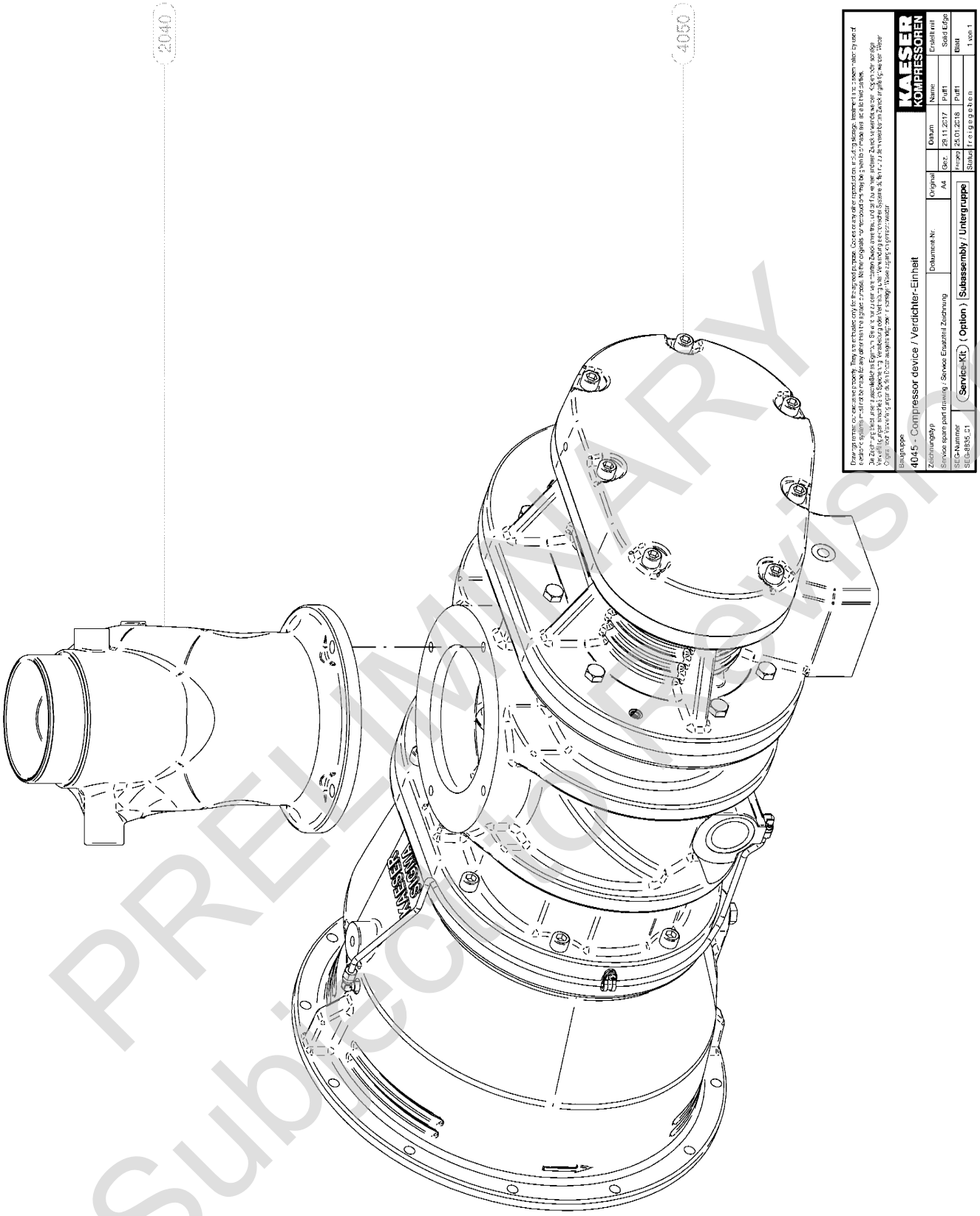

PRELIMINARY
Subject to Revision

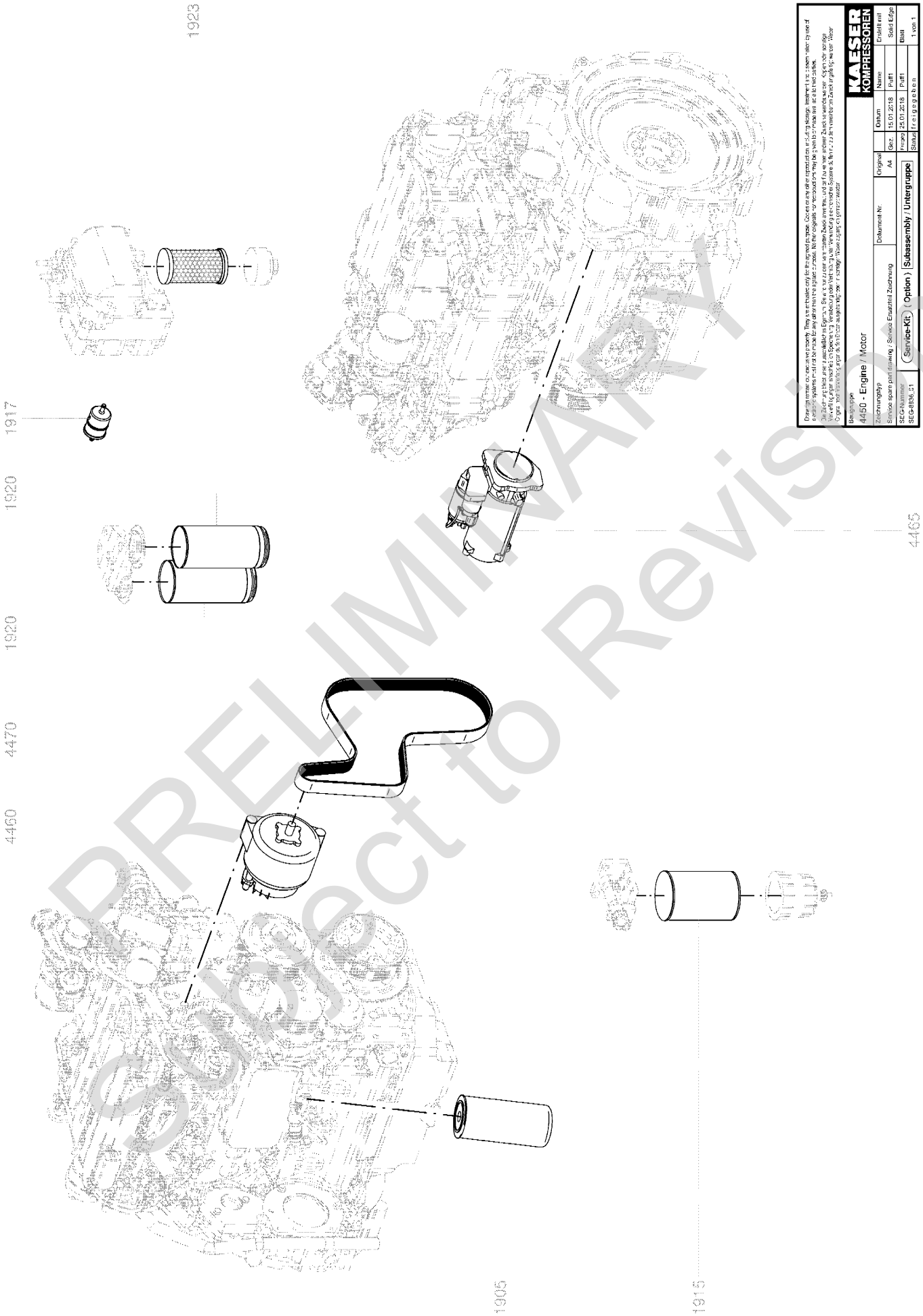

PRELIMINARY
Subject to Revision

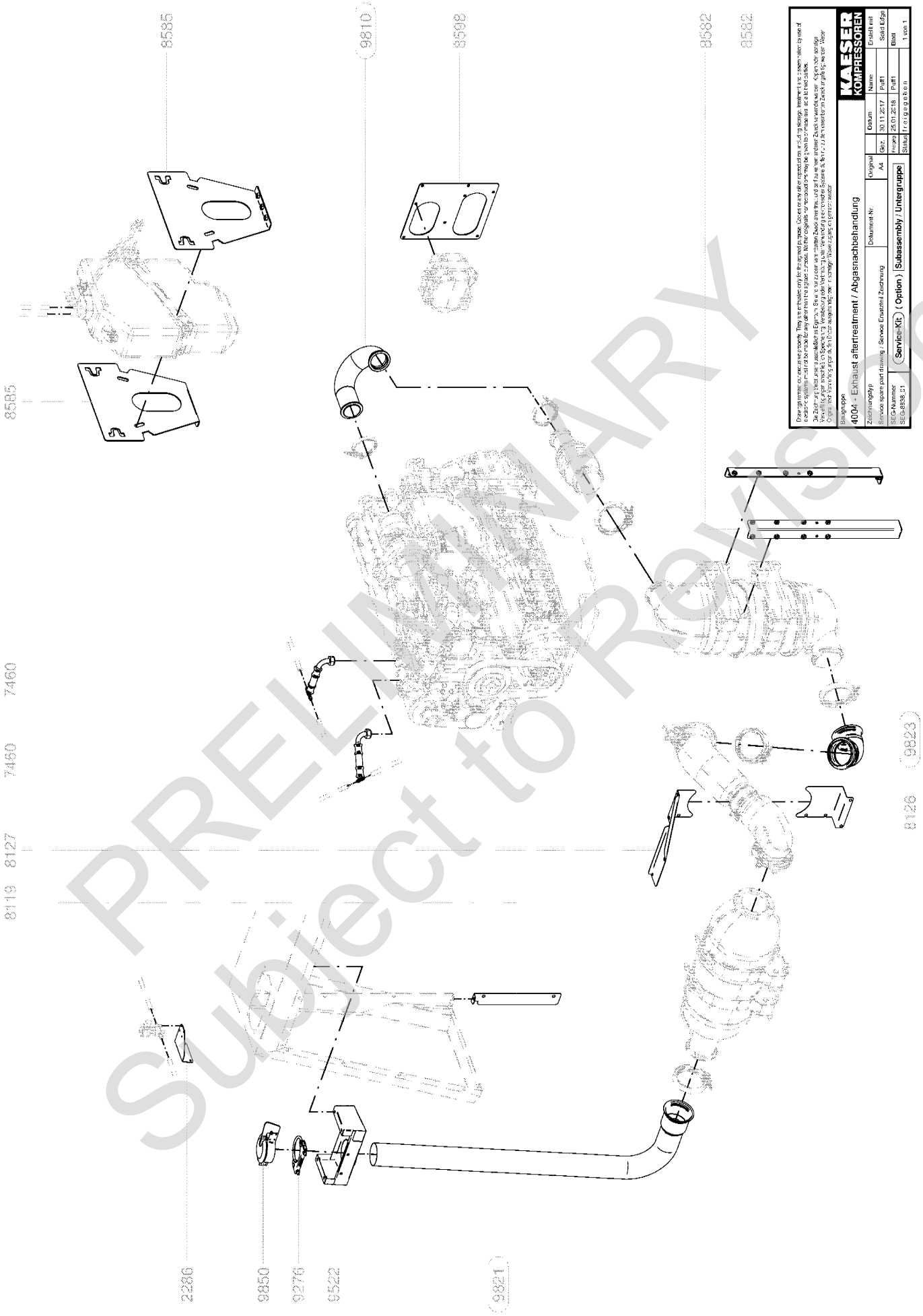

PRELIMINARY
Subject to Revision

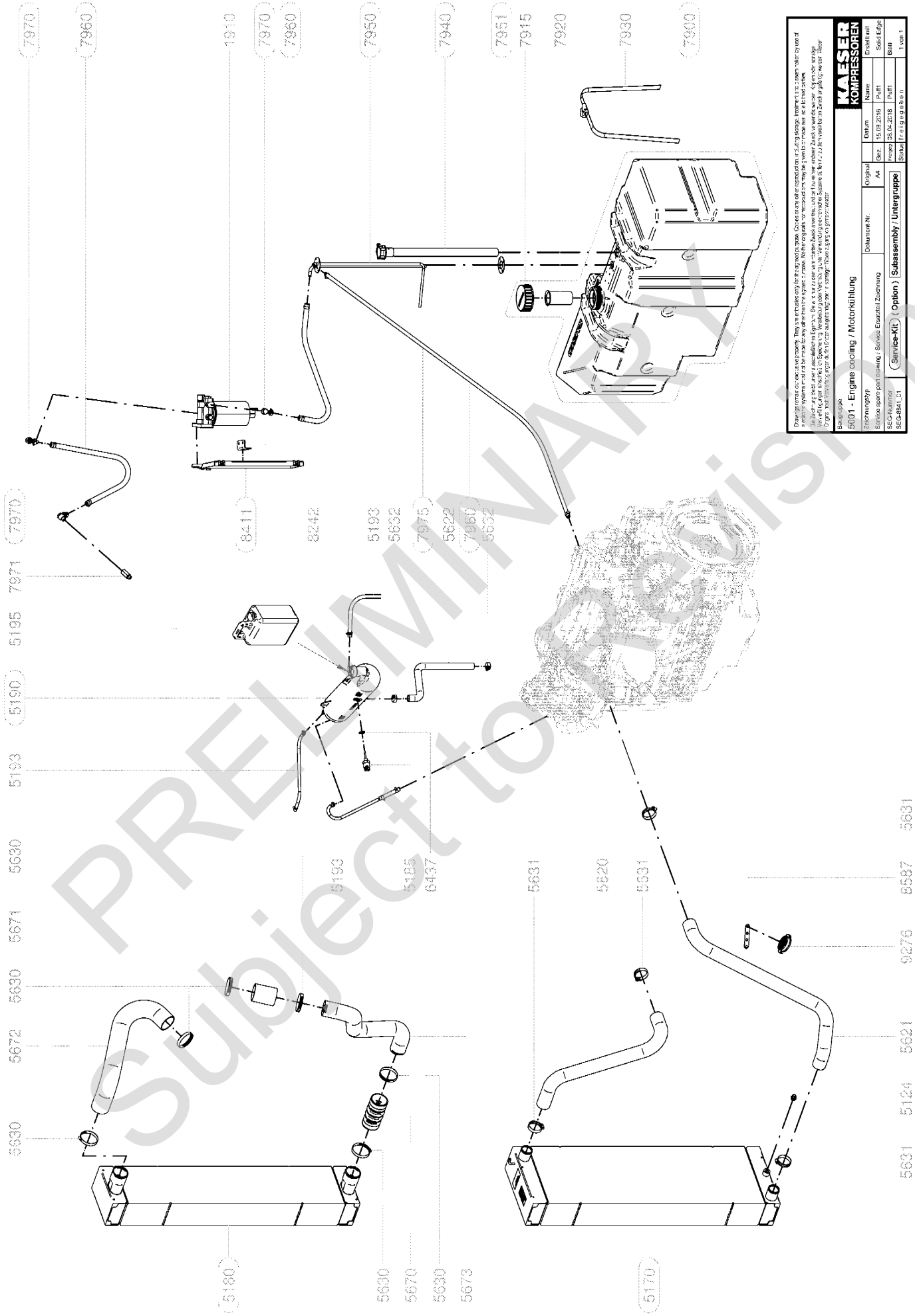

PRELIMINARY
Subject to Revision

SEG-2902_01

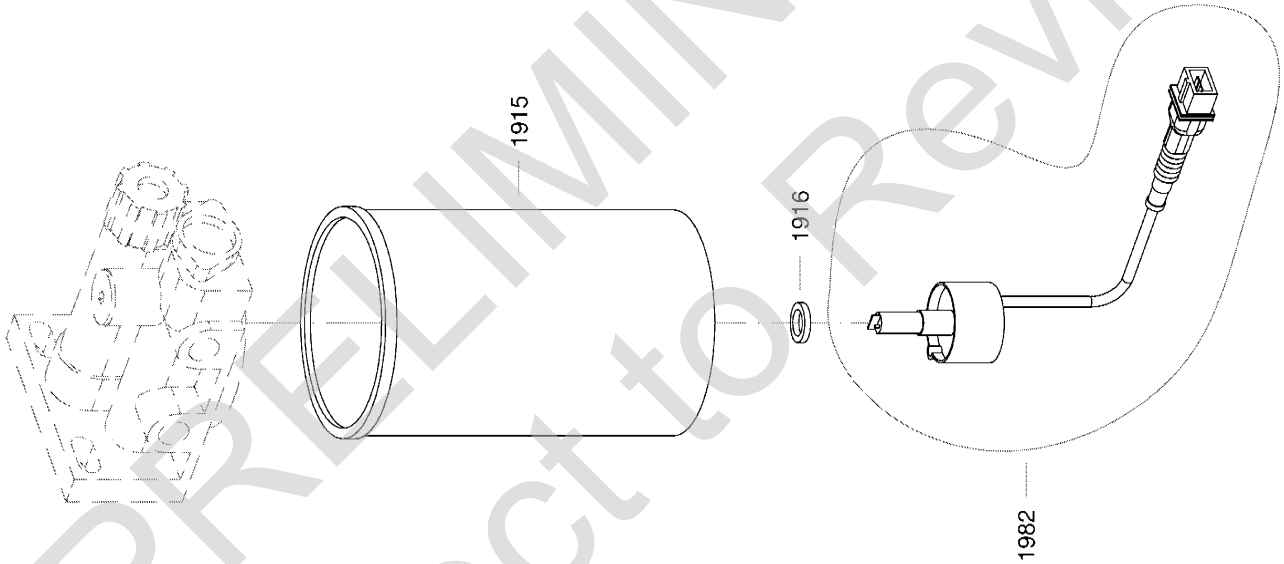

PRELIMINARY
Subject to Revision

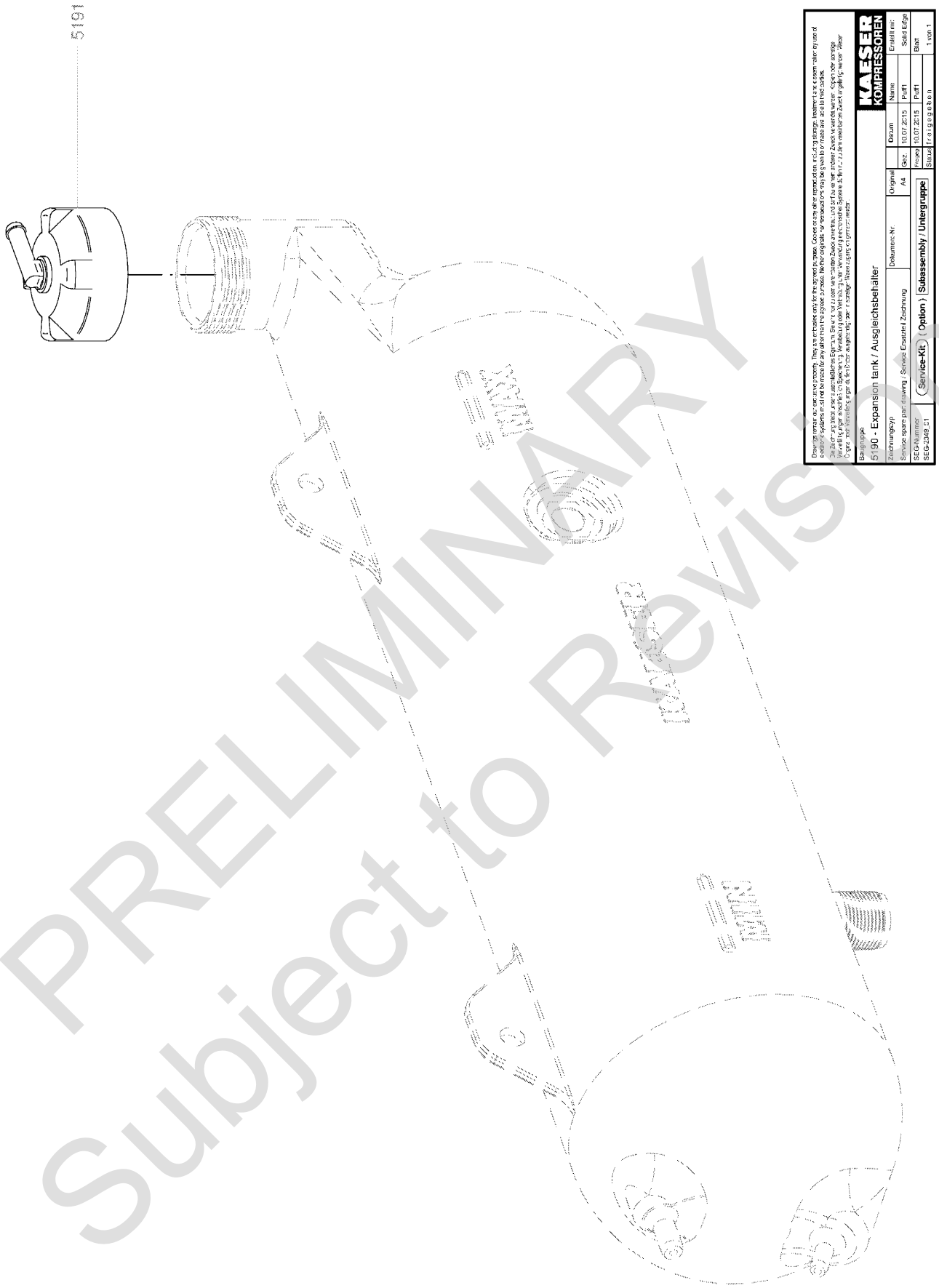

PRELIMINARY
Subject to Revision

Service-Kit (Option)

6001 Ölabscheidung/Steuerluft / Oil separation/control air

SEG-5762_01

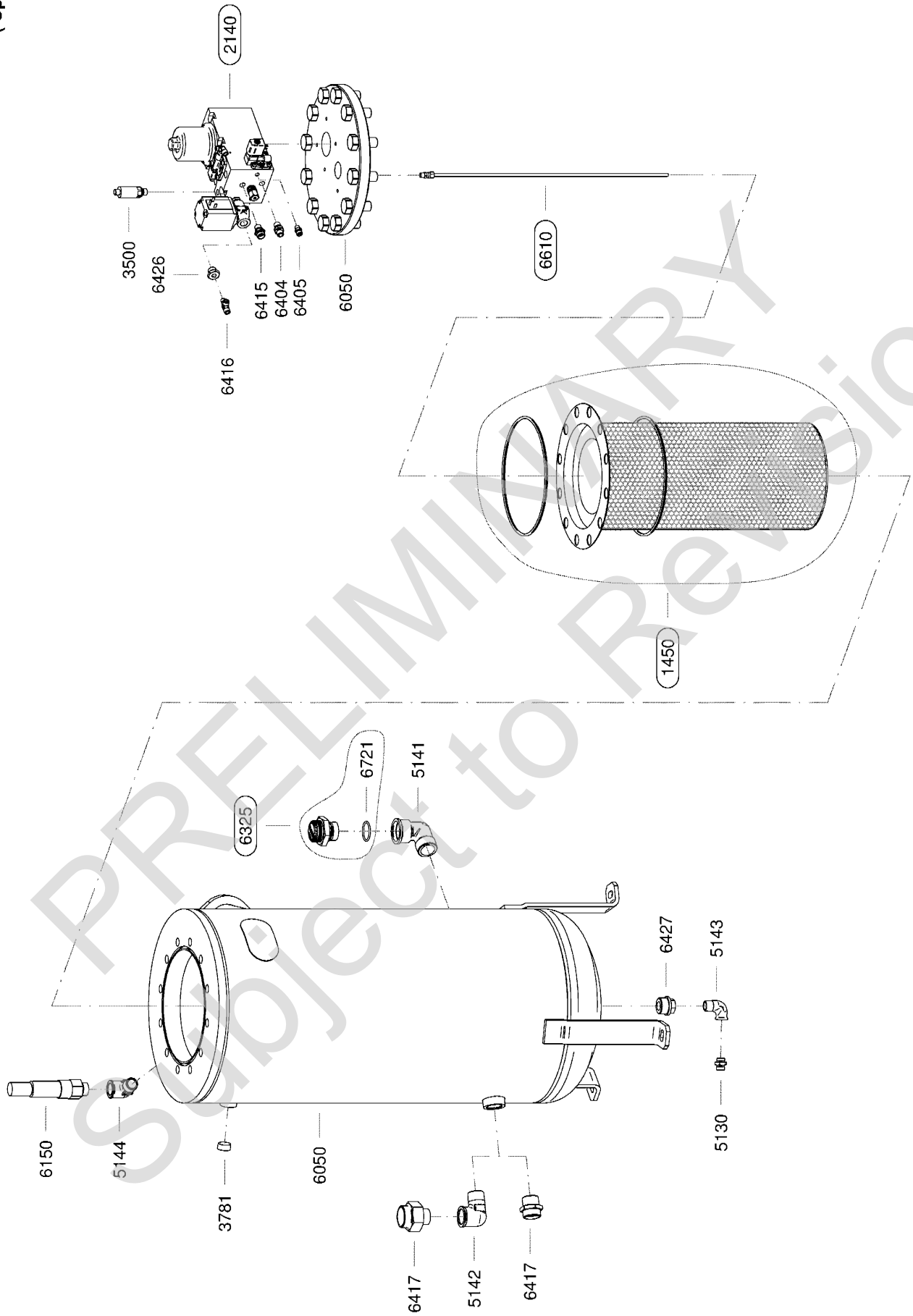

PRELIMINARY
Subject to Revision

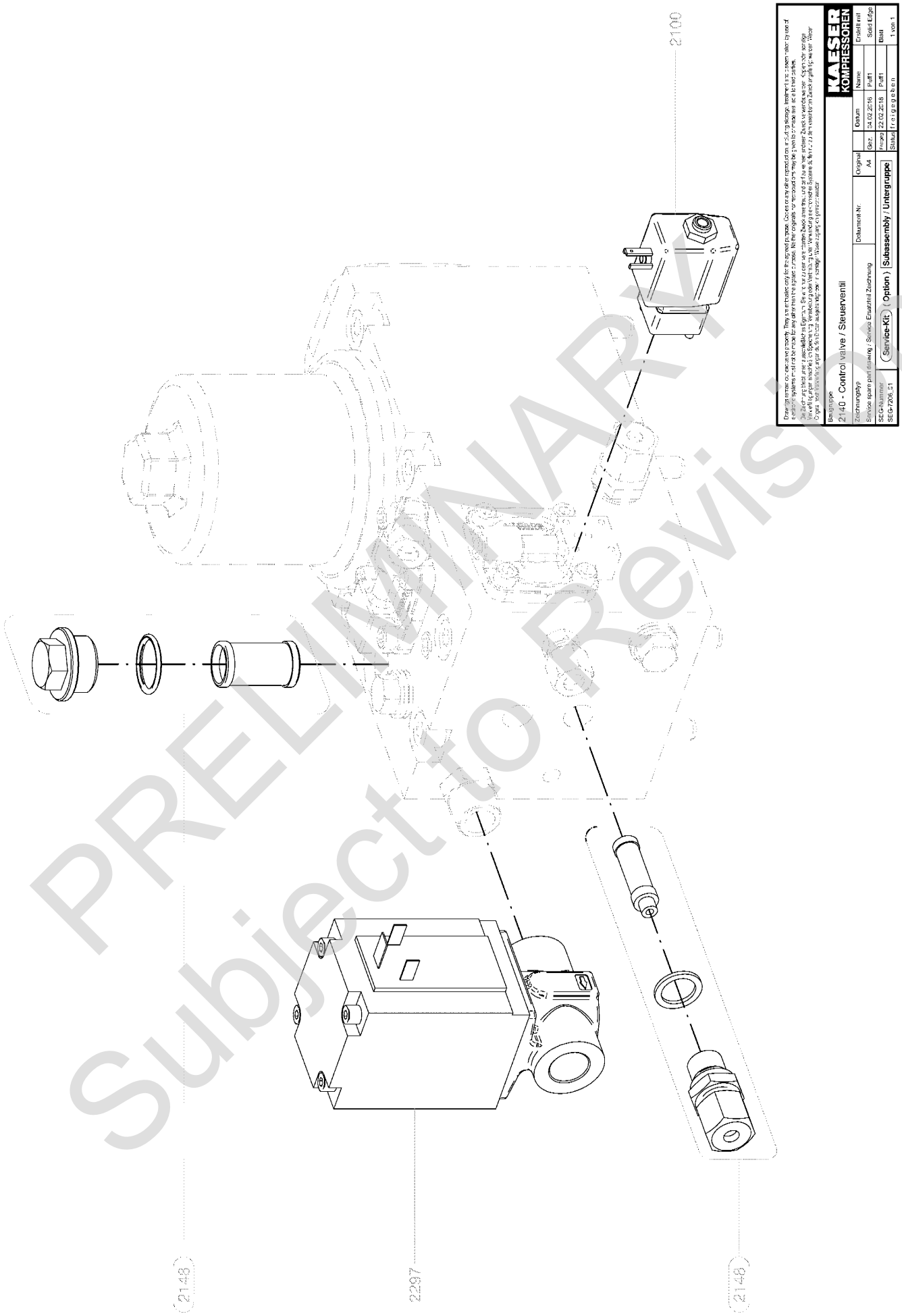

PRELIMINARY
Subject to Revision

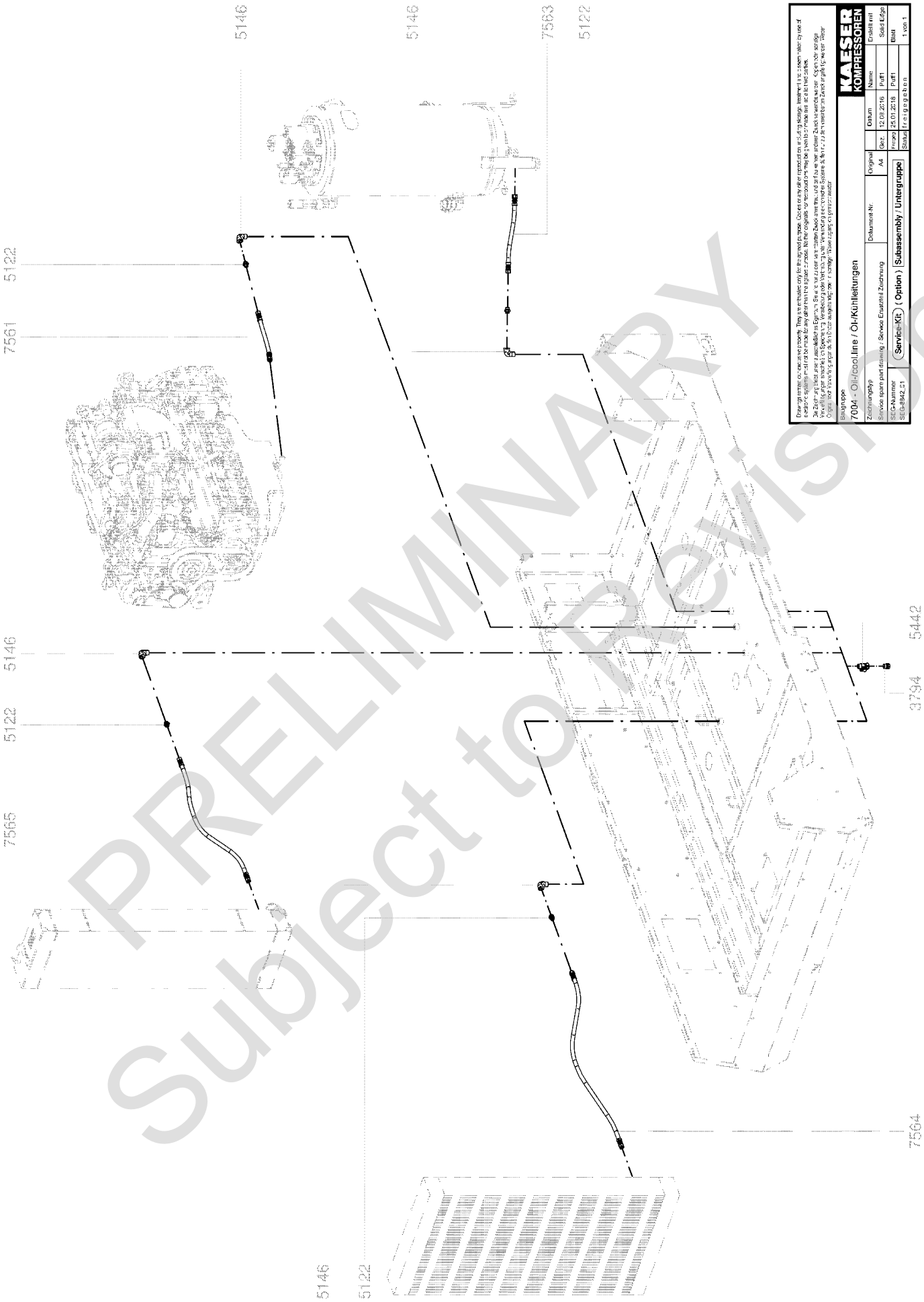

PRELIMINARY
Subject to Revision

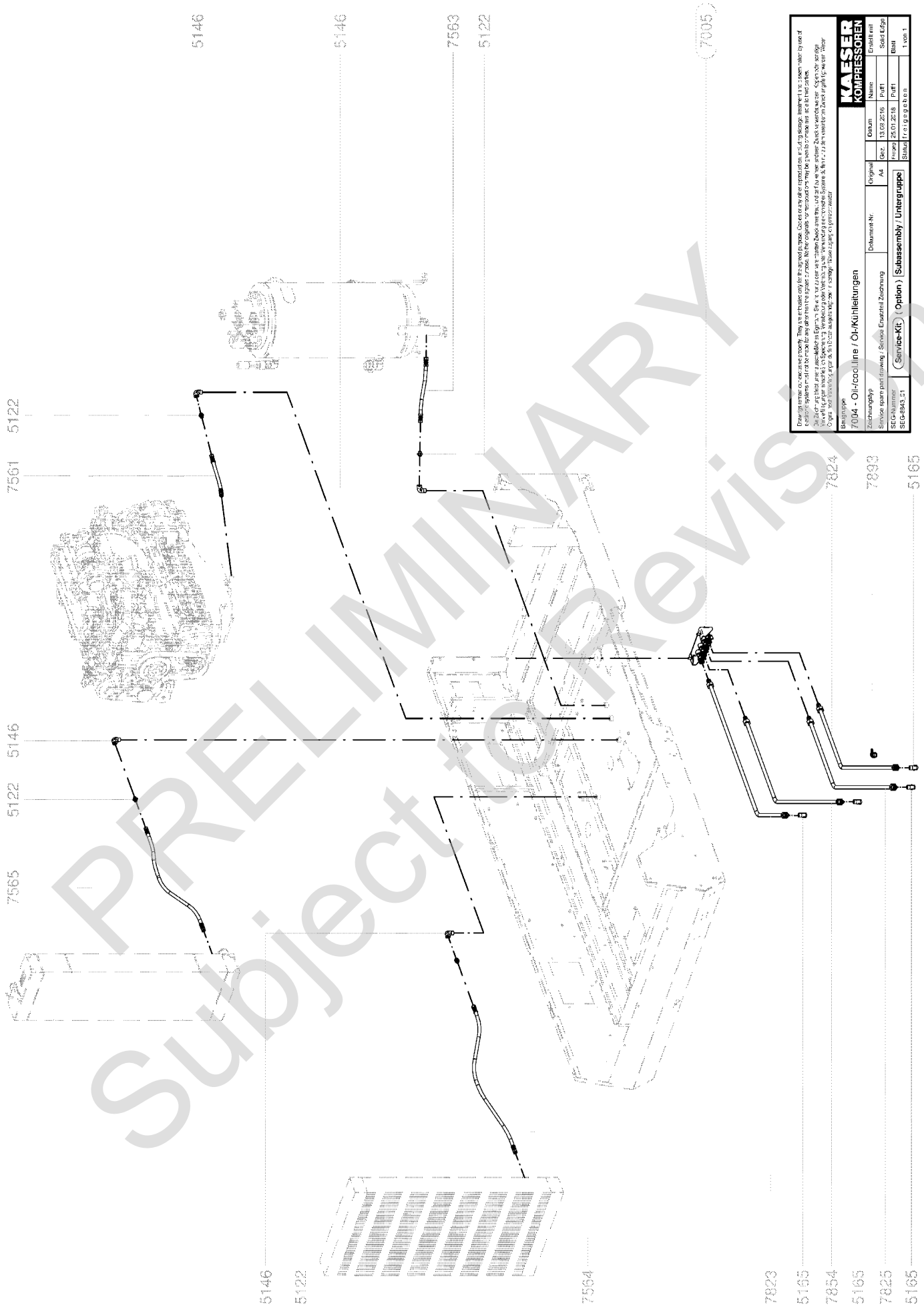

PRELIMINARY
Subject to Revision

Service-Kit (Option)

7005 Öl-/Kühlleitungen Ausgang / Oil-/cool.line outlet

SEG-5765_01

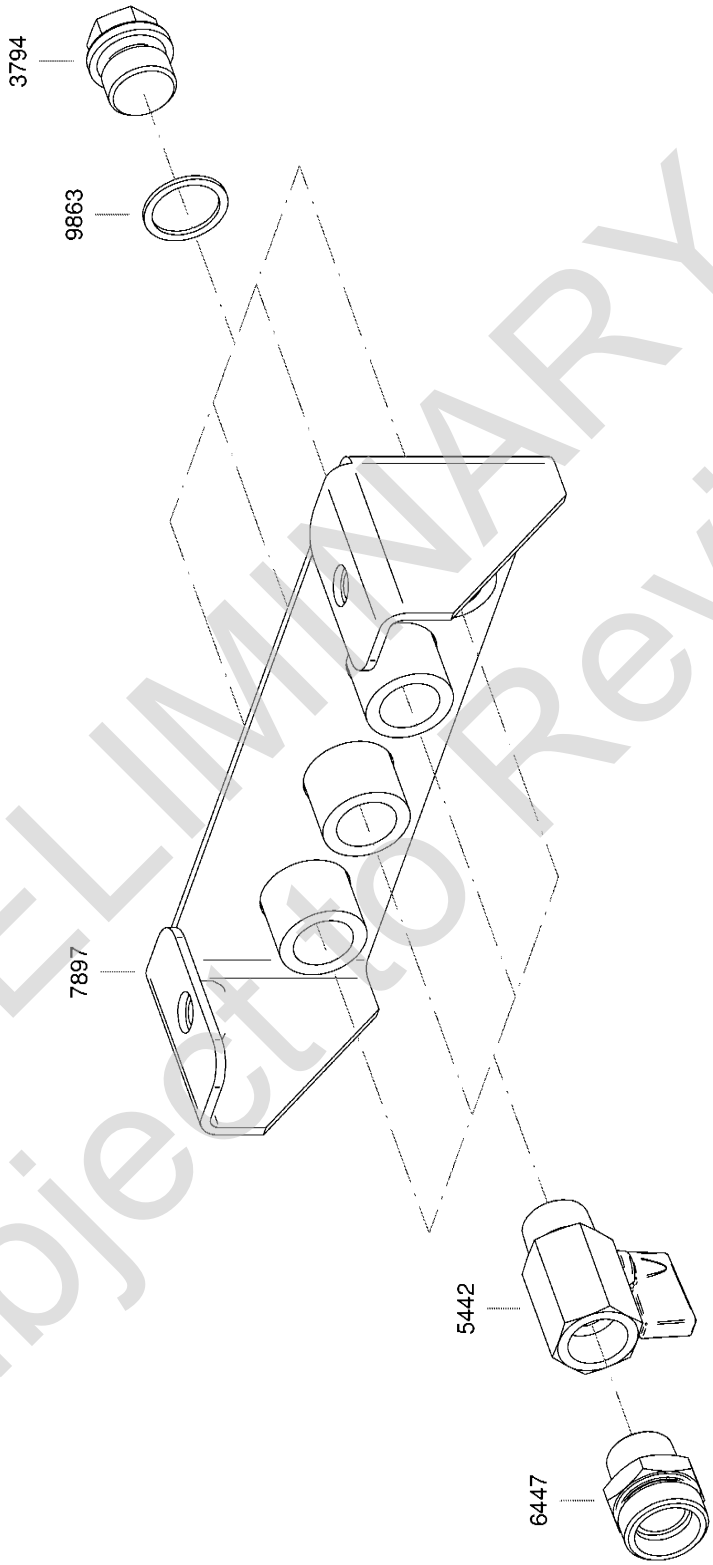

PRELIMINARY
Subject to Revision

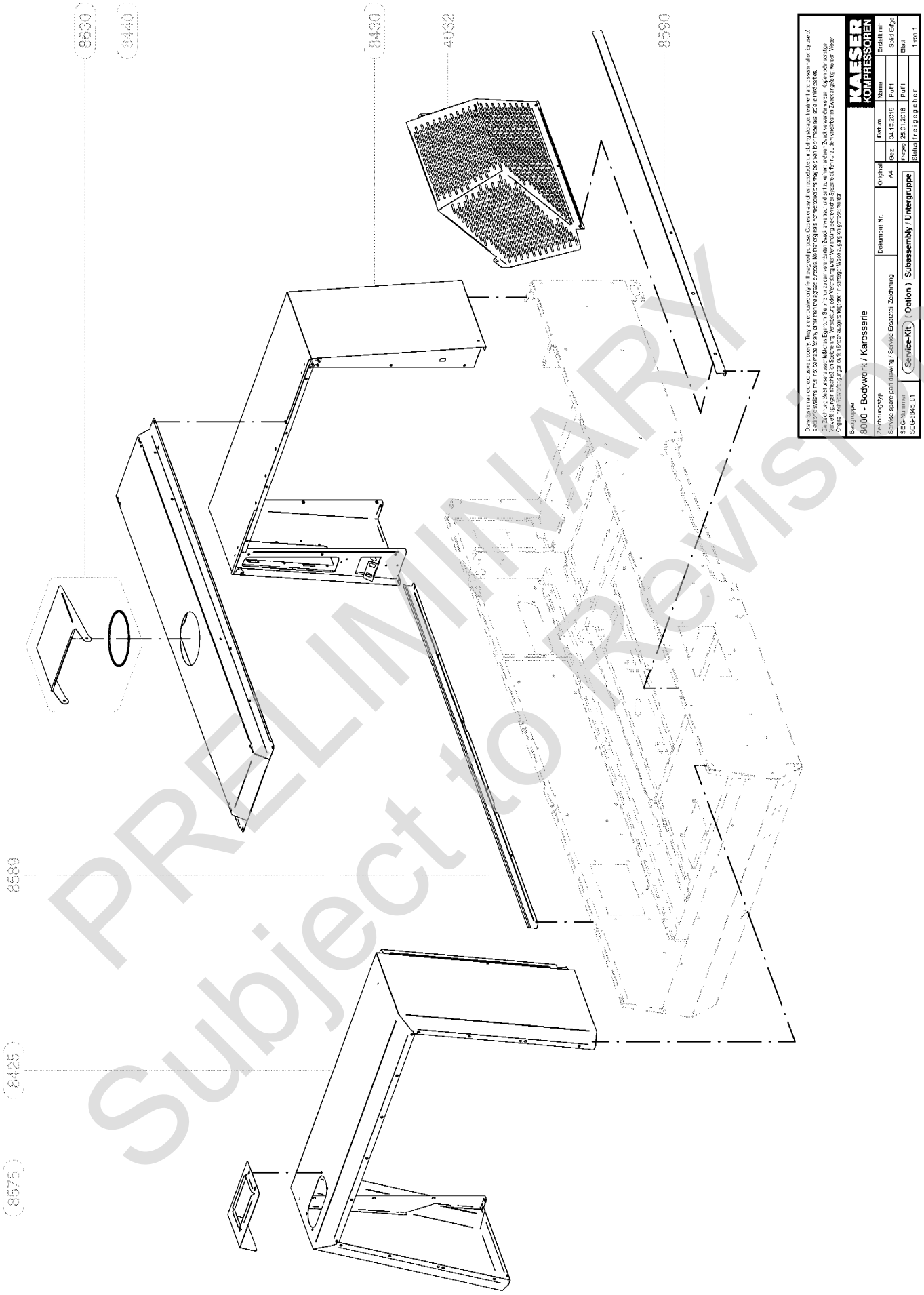

PRELIMINARY
Subject to Revision

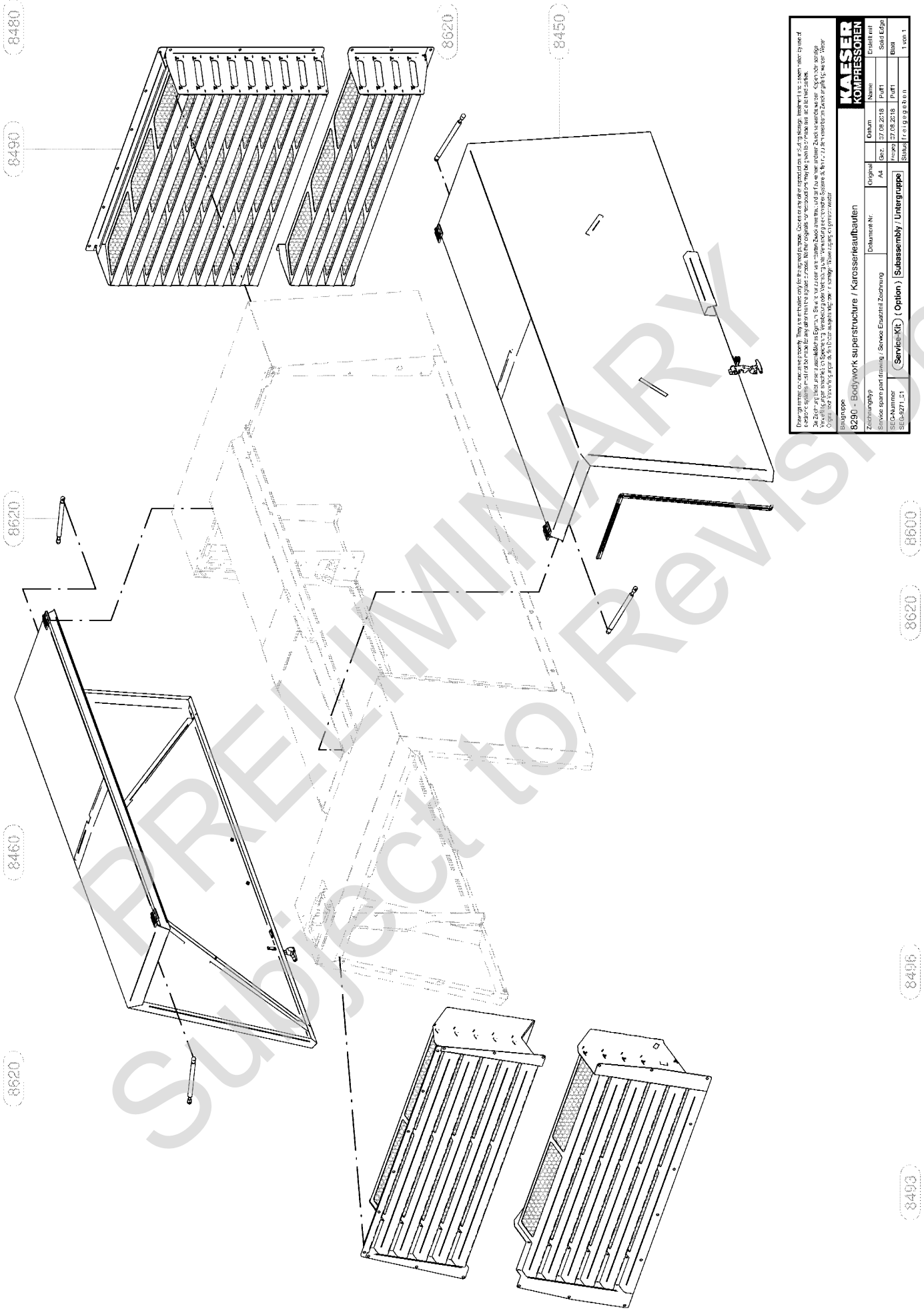

PRELIMINARY
Subject to Revision

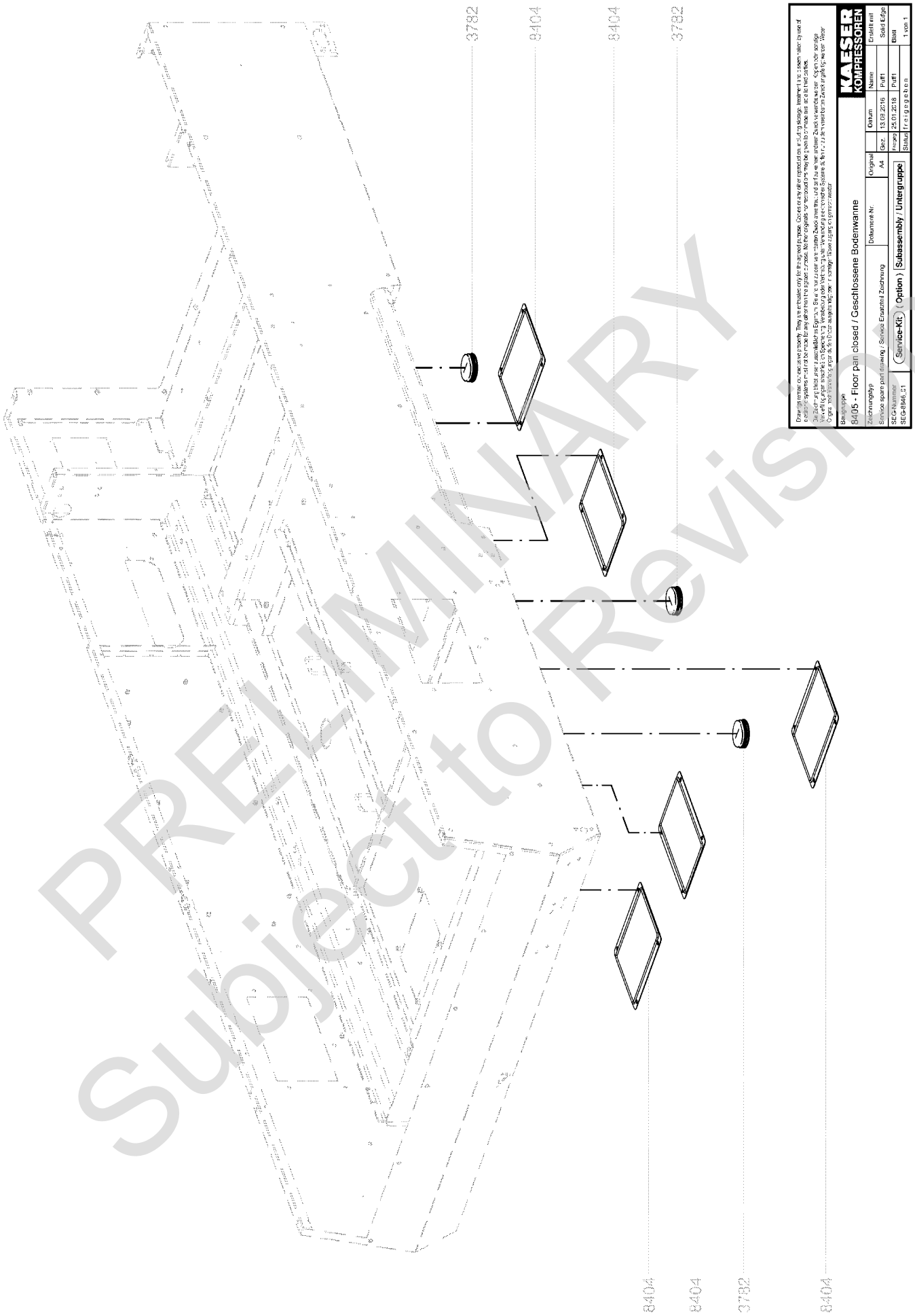

PRELIMINARY
Subject to Revision

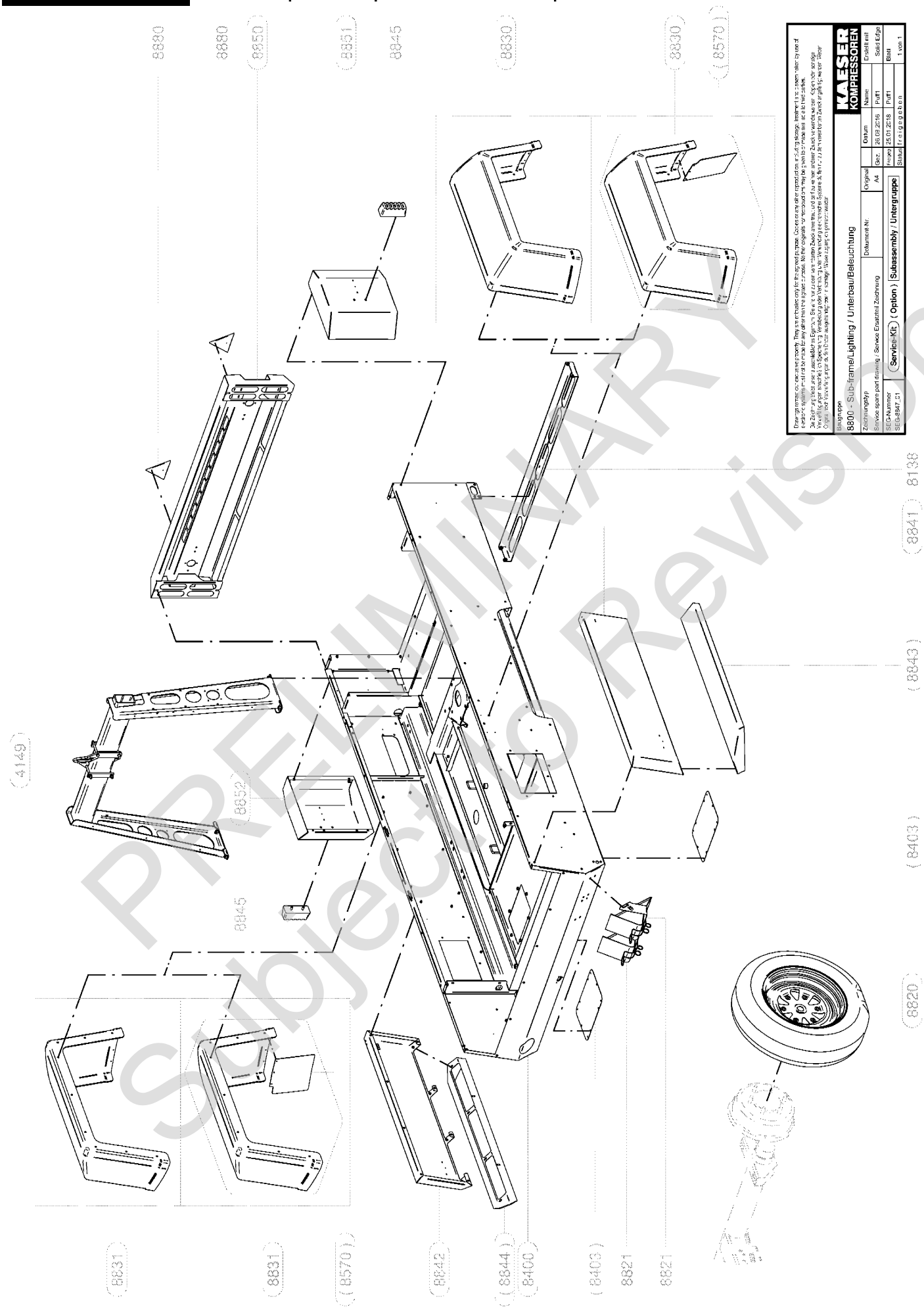

PRELIMINARY
Subject to Revision

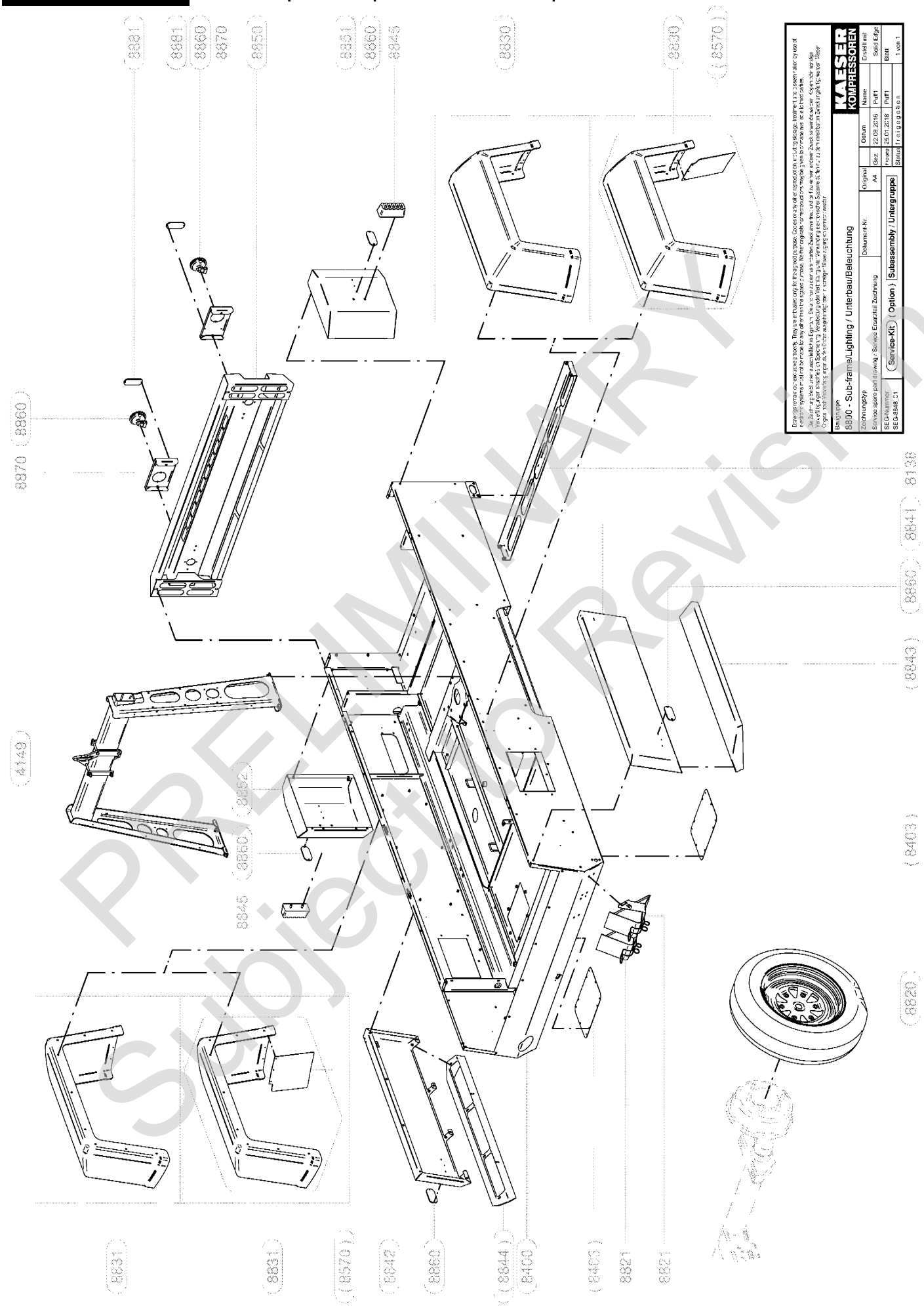

PRELIMINARY
Subject to Revision

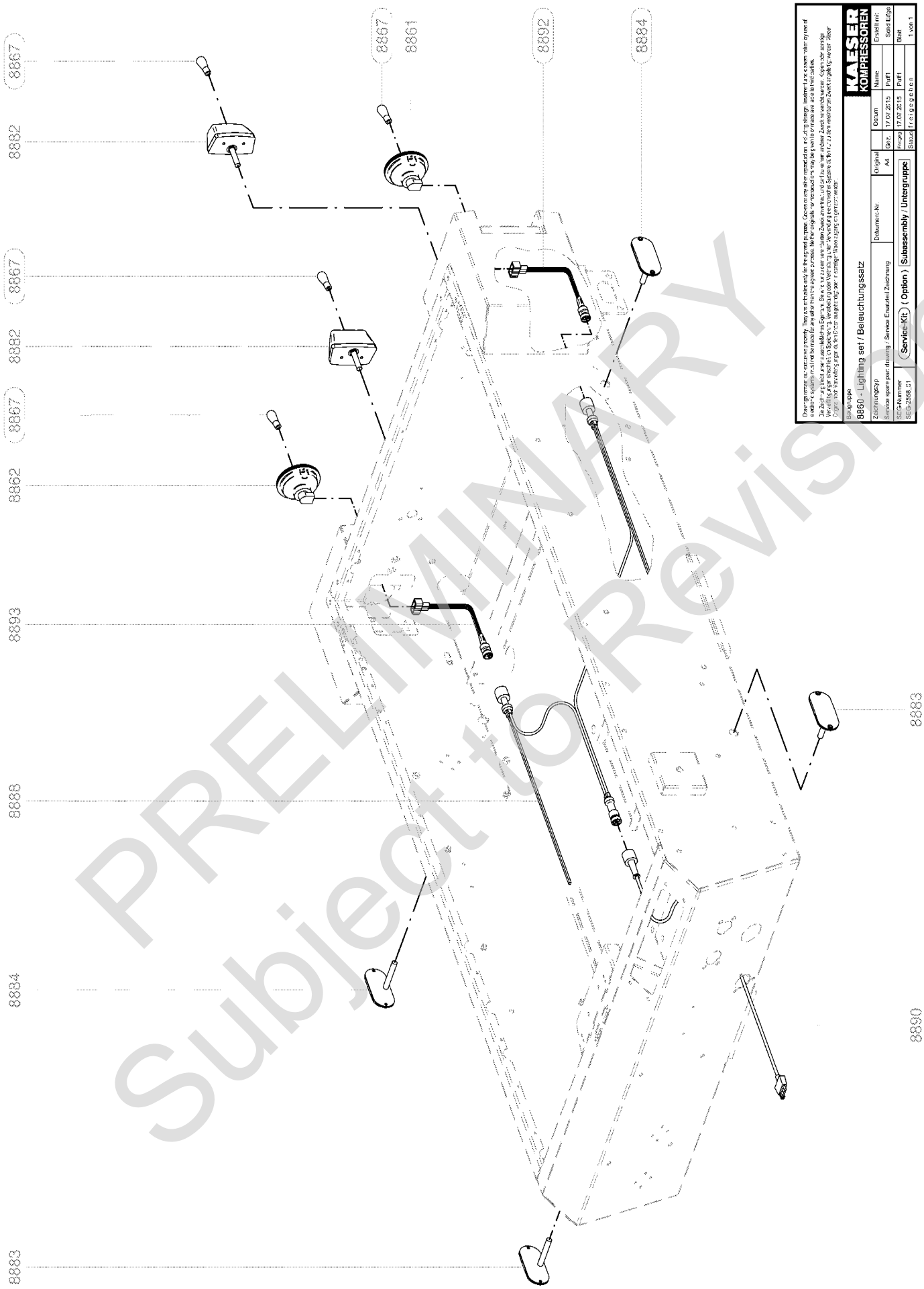

PRELIMINARY
Subject to Revision

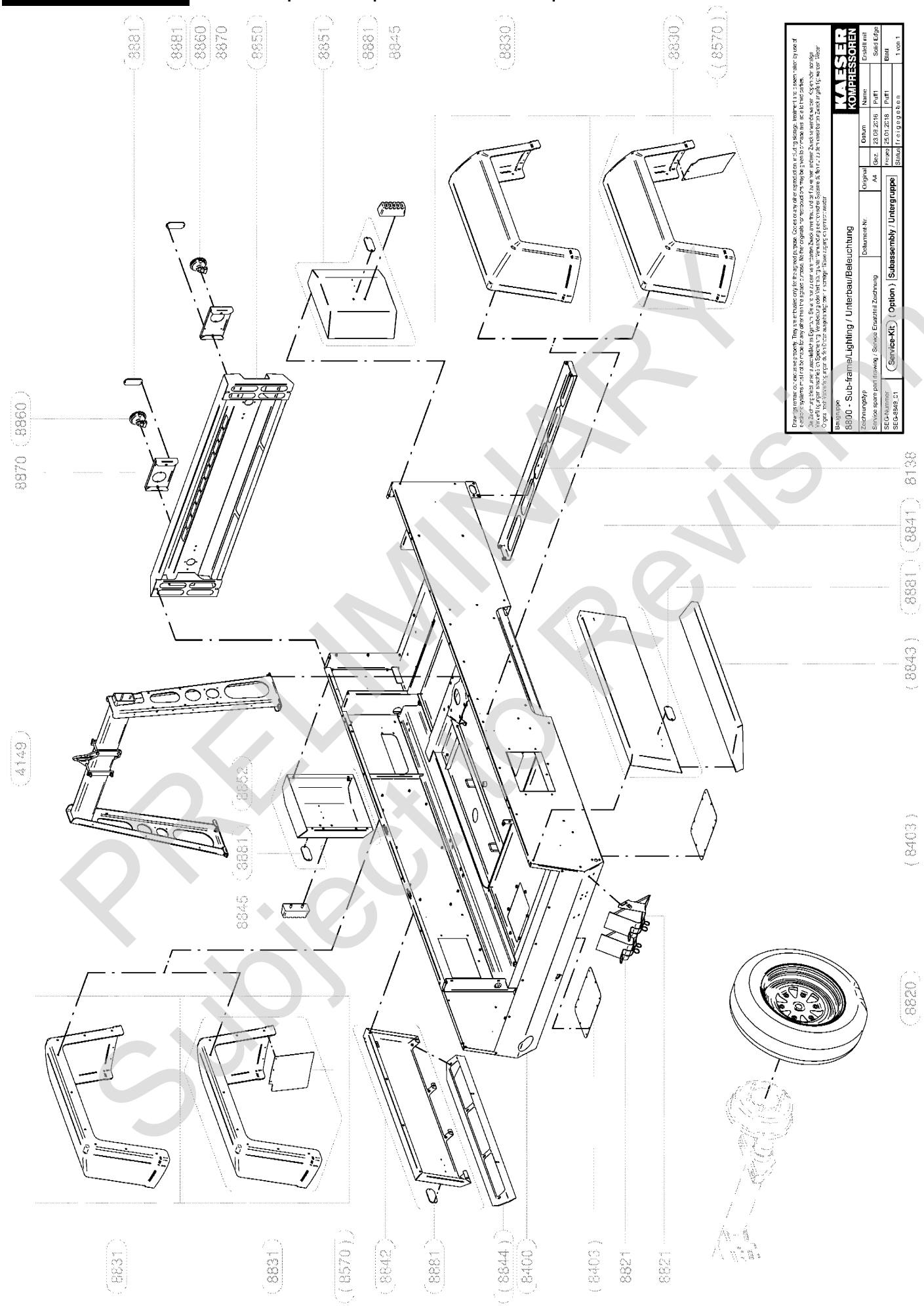
8881
8881
8860
8870
8850
8851
8881
8845
8830
8830
8570
8870
8860
4149
8852
8881
8845
8881
8843
8881
8841
8138
8403
8820
8831
8831
8570
8842
8881
8844
8400
8403
8821
8821
PRELIMINARY
Subject to Revision
KAESER KOMPRESSOREN
Bezeichnung / Subassembly / Untergruppe
8800 - Sub-frame/Lighting / Unterbau/Beleuchtung
Service-Kit
Option
Status: freigegeben
1 von 1

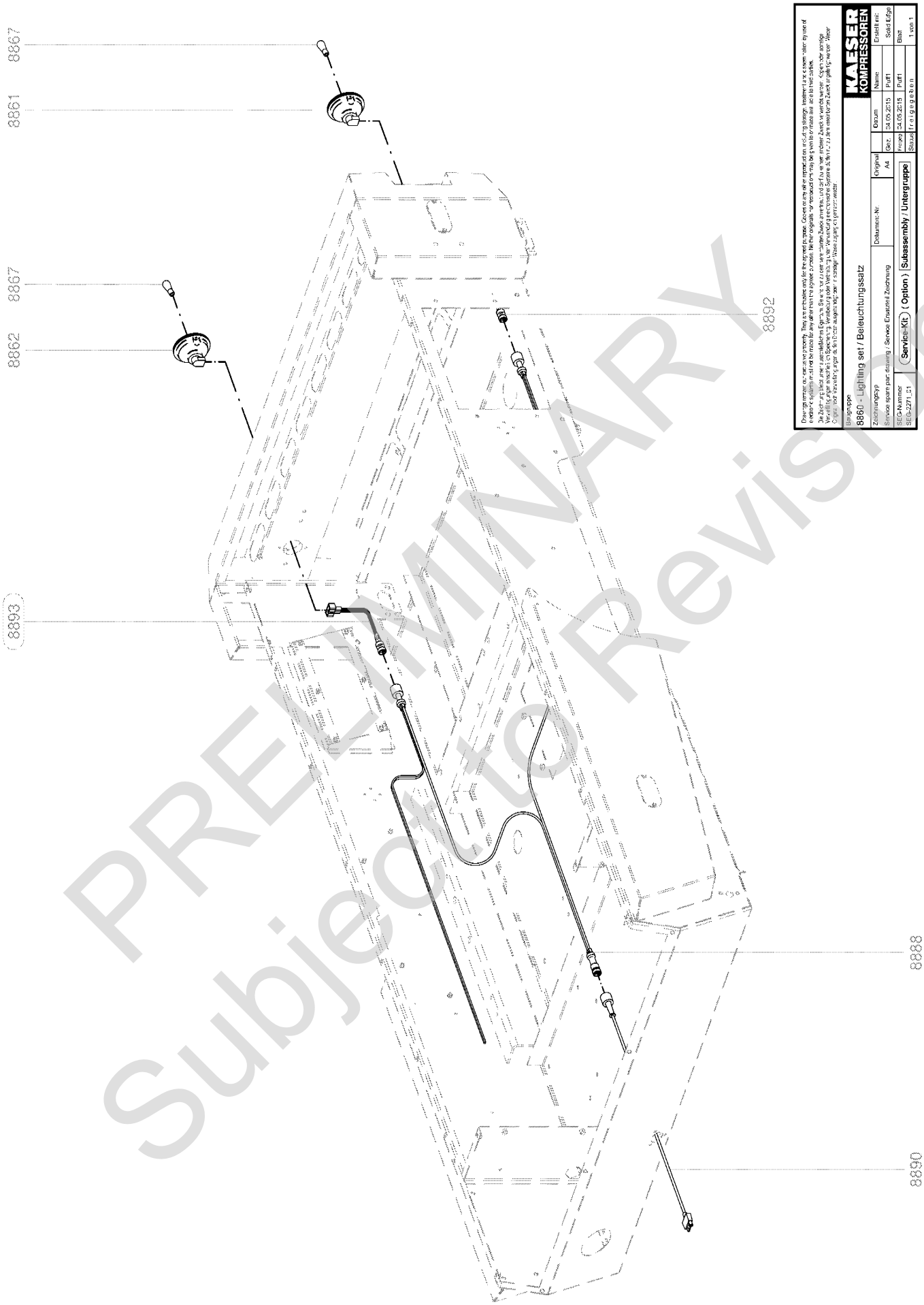

PRELIMINARY
Subject to Revision

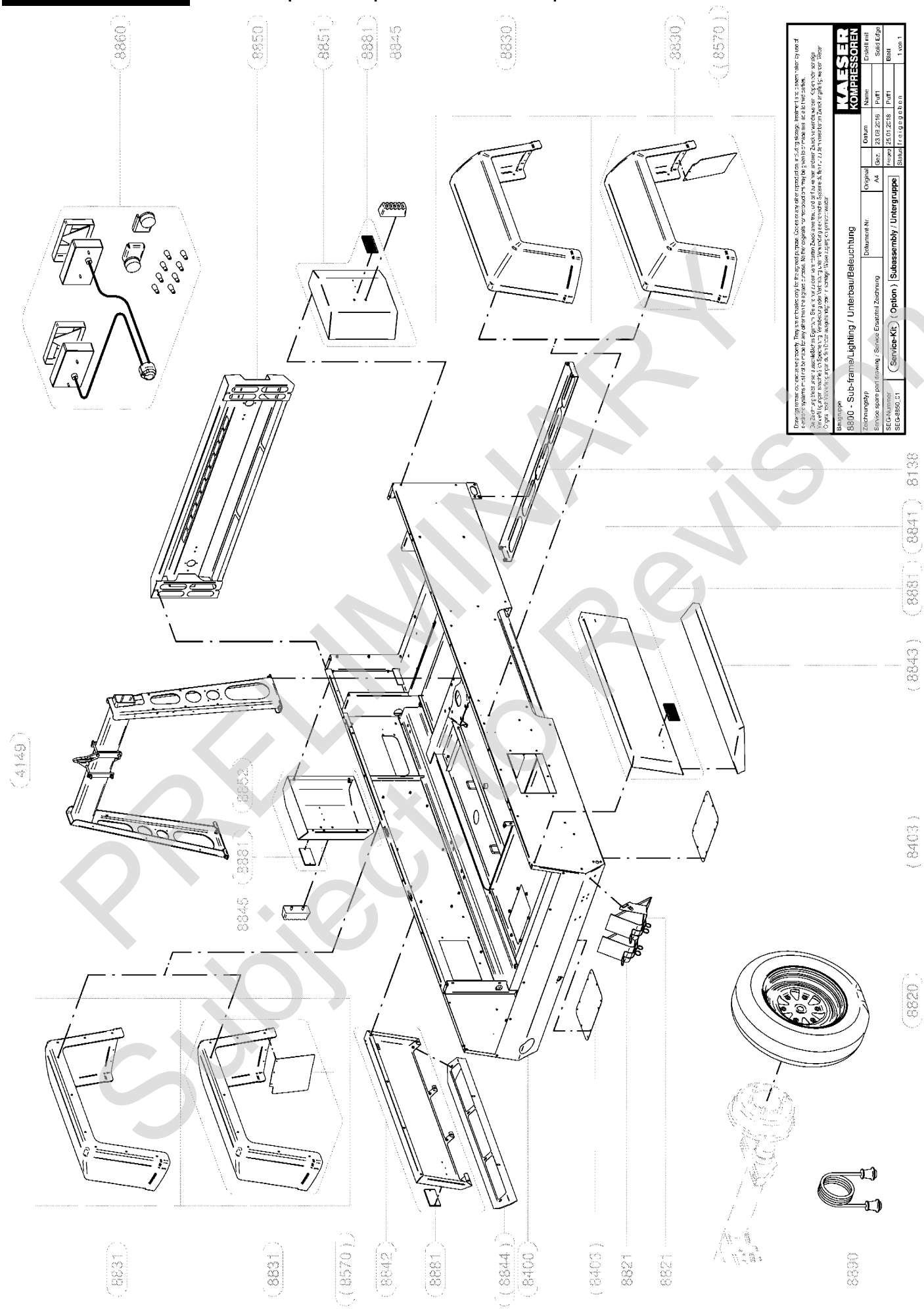

PRELIMINARY
Subject to Revision

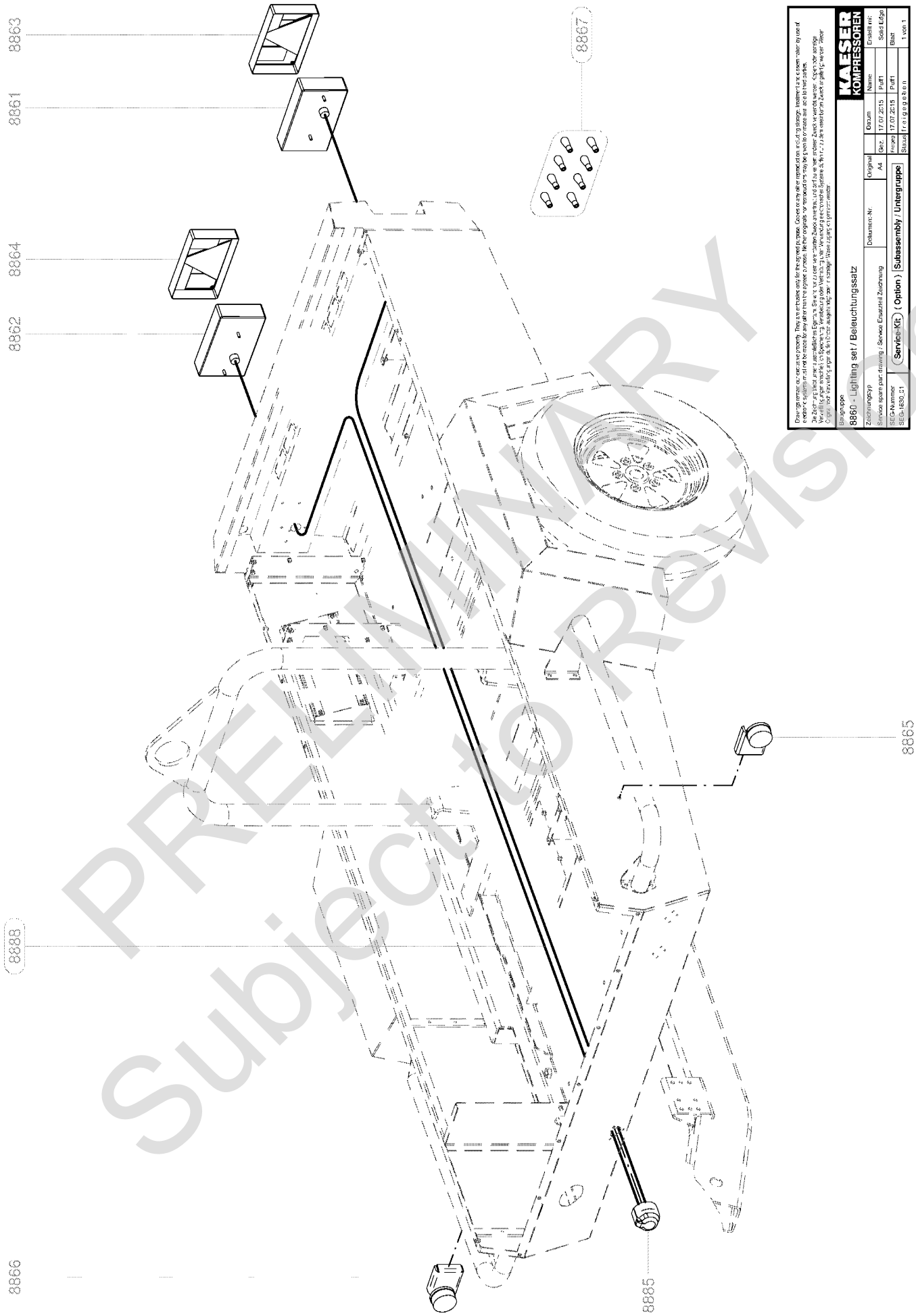

PRELIMINARY
Subject to Revision

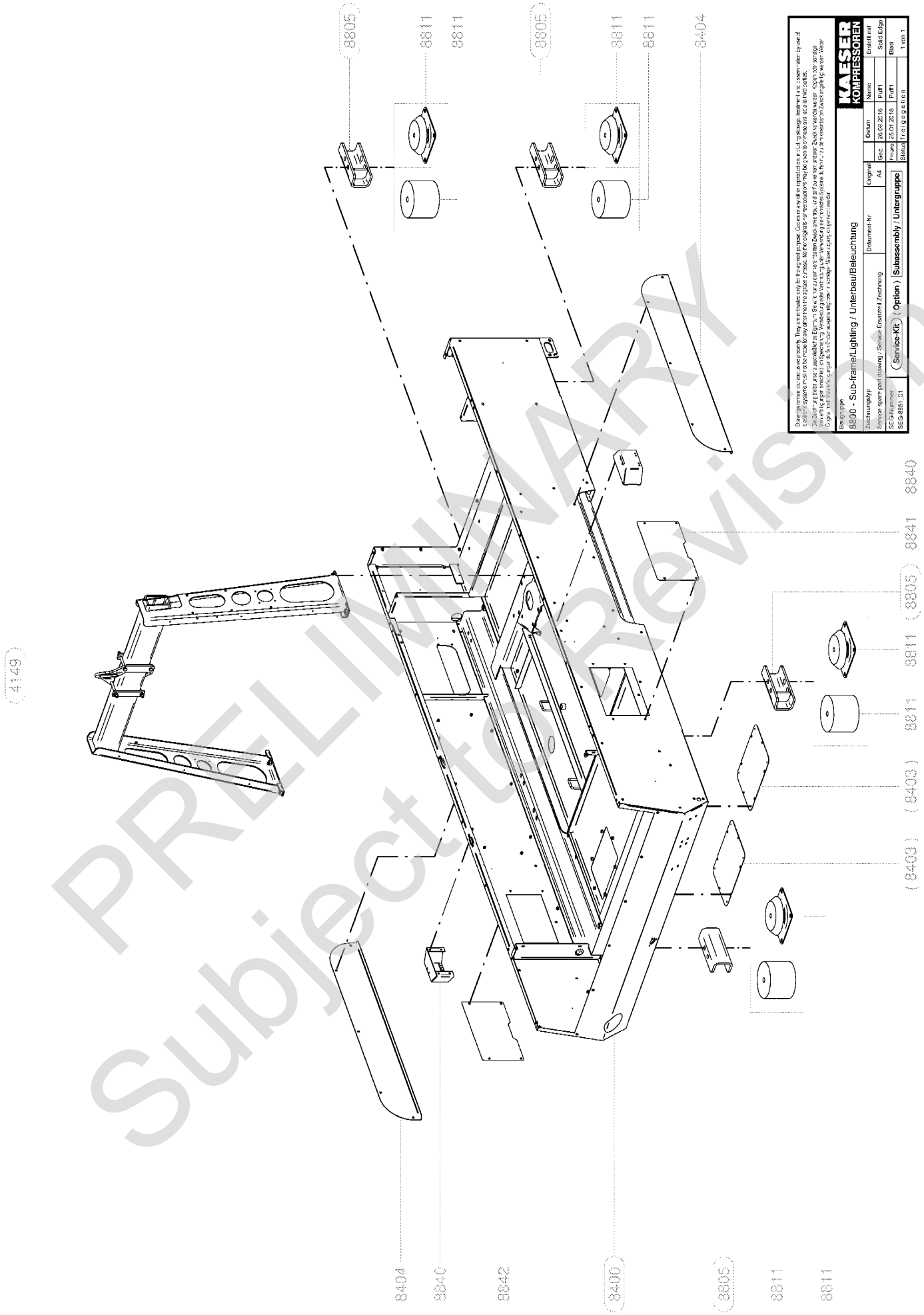

PRELIMINARY
Subject to Revision

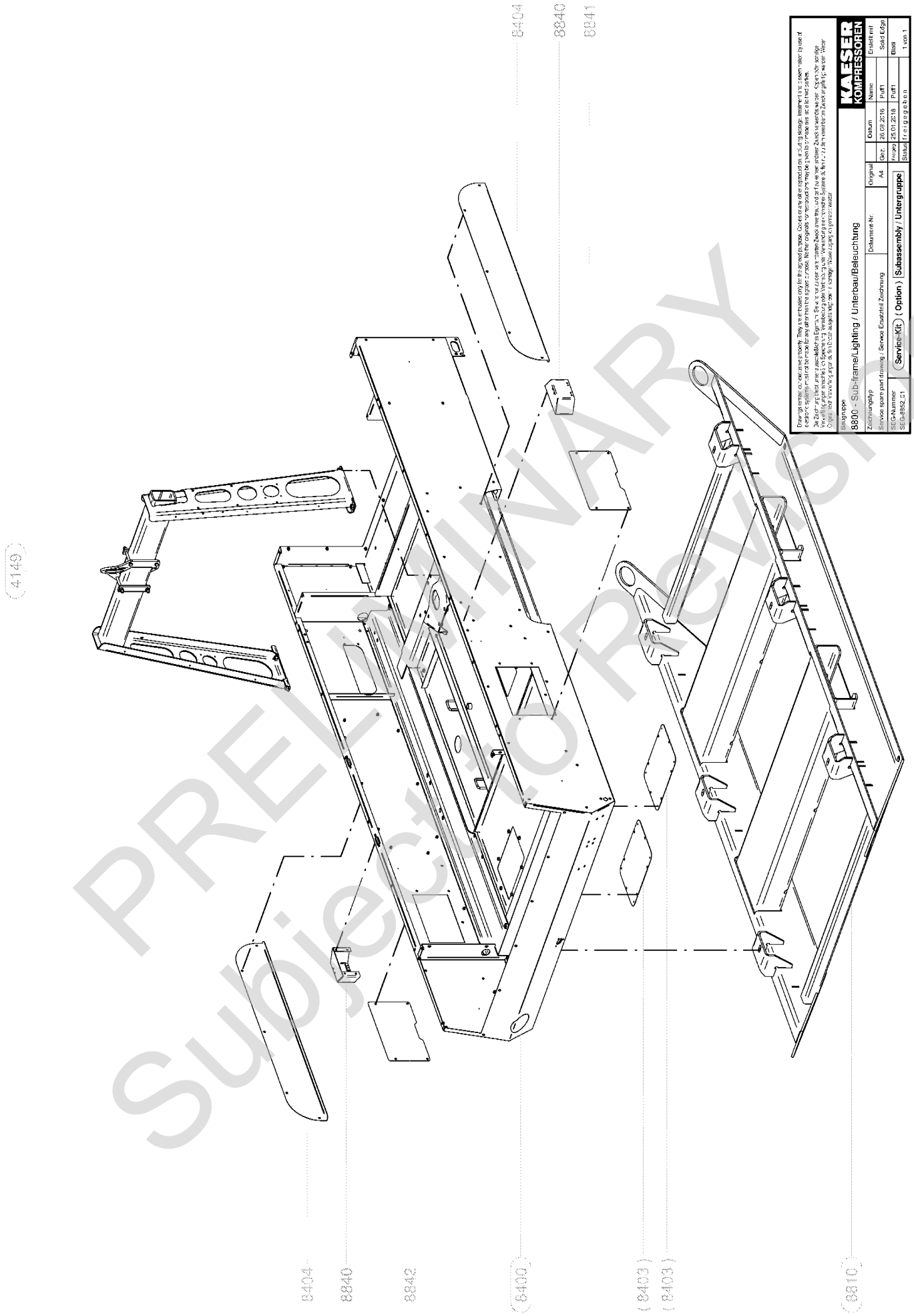

PRELIMINARY
Subject to Revision

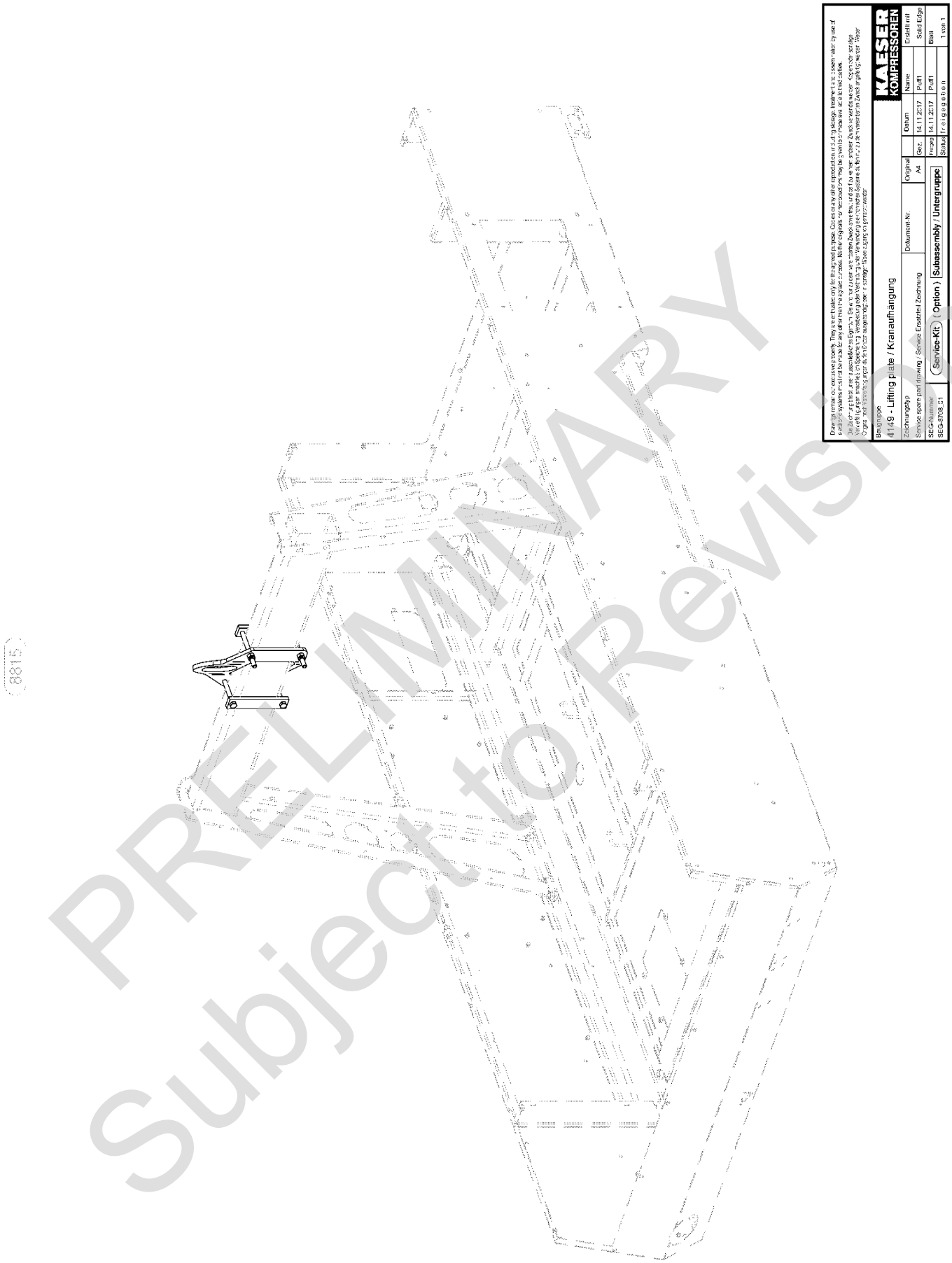

PRELIMINARY
Subject to Revision

Service-Kit (Option)

8900 Fahrwerk komplett / Chassis complete

SEG-5782_01

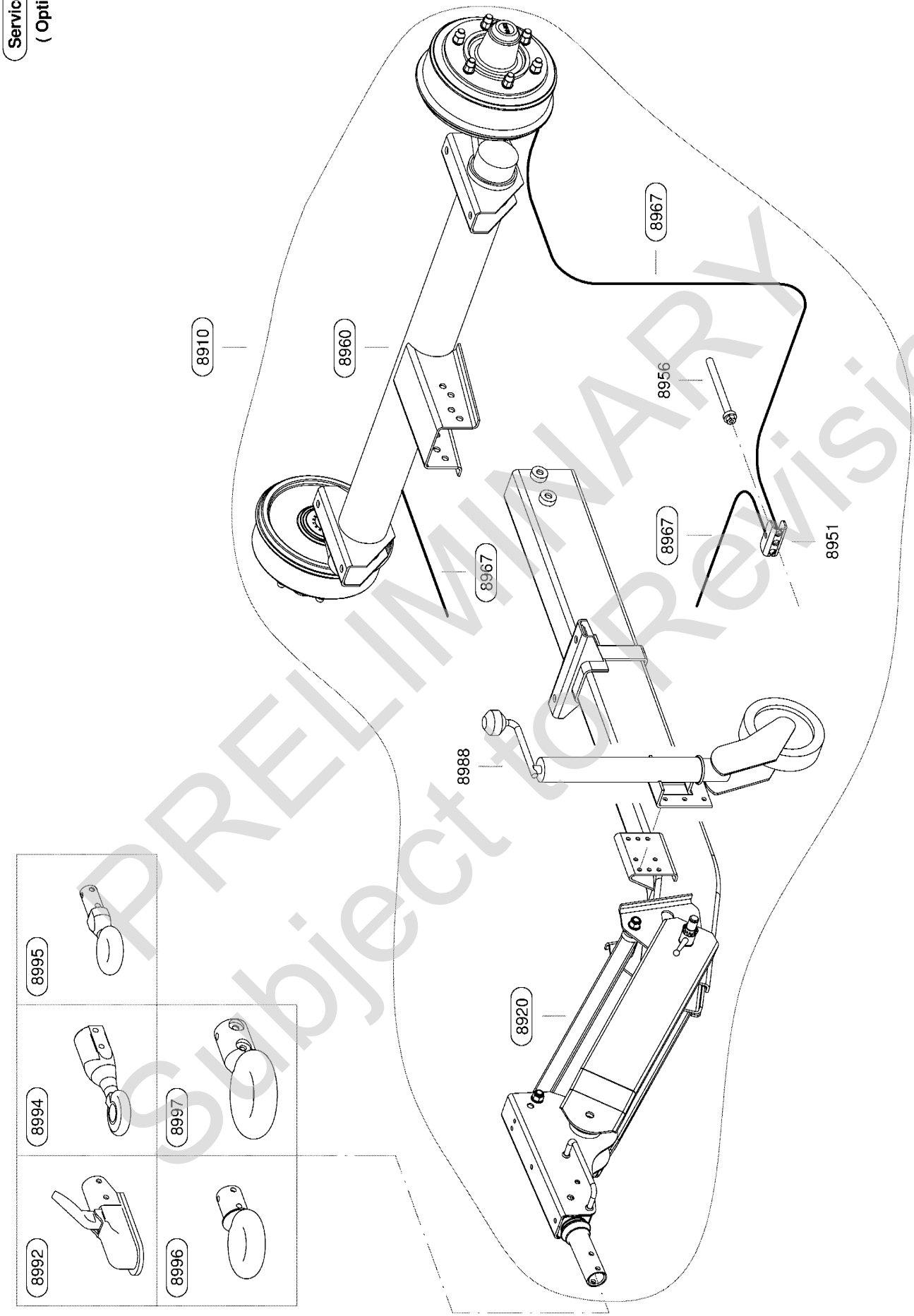

PRELIMINARY
Subject to Revision

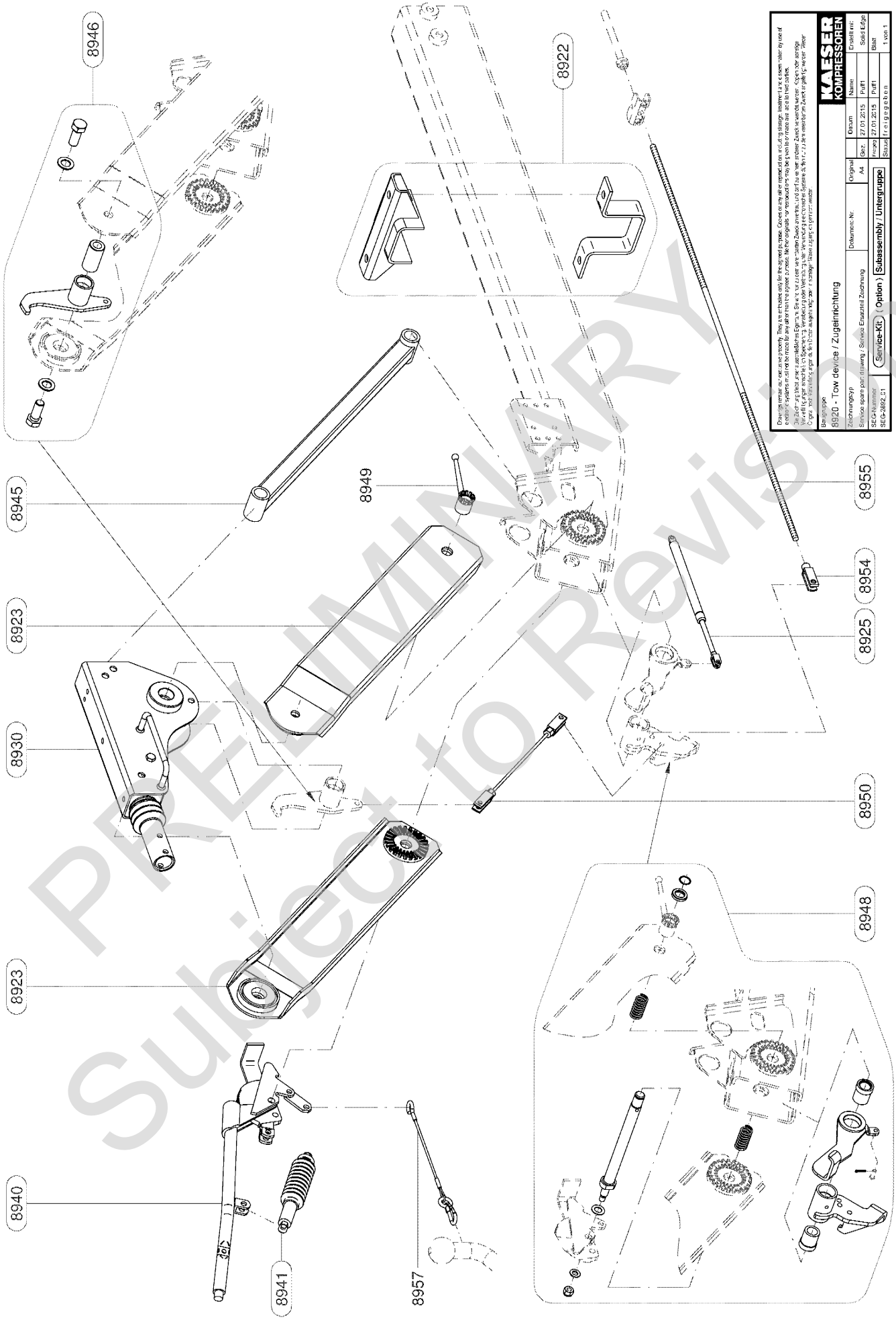

PRELIMINARY
Subject to Revision

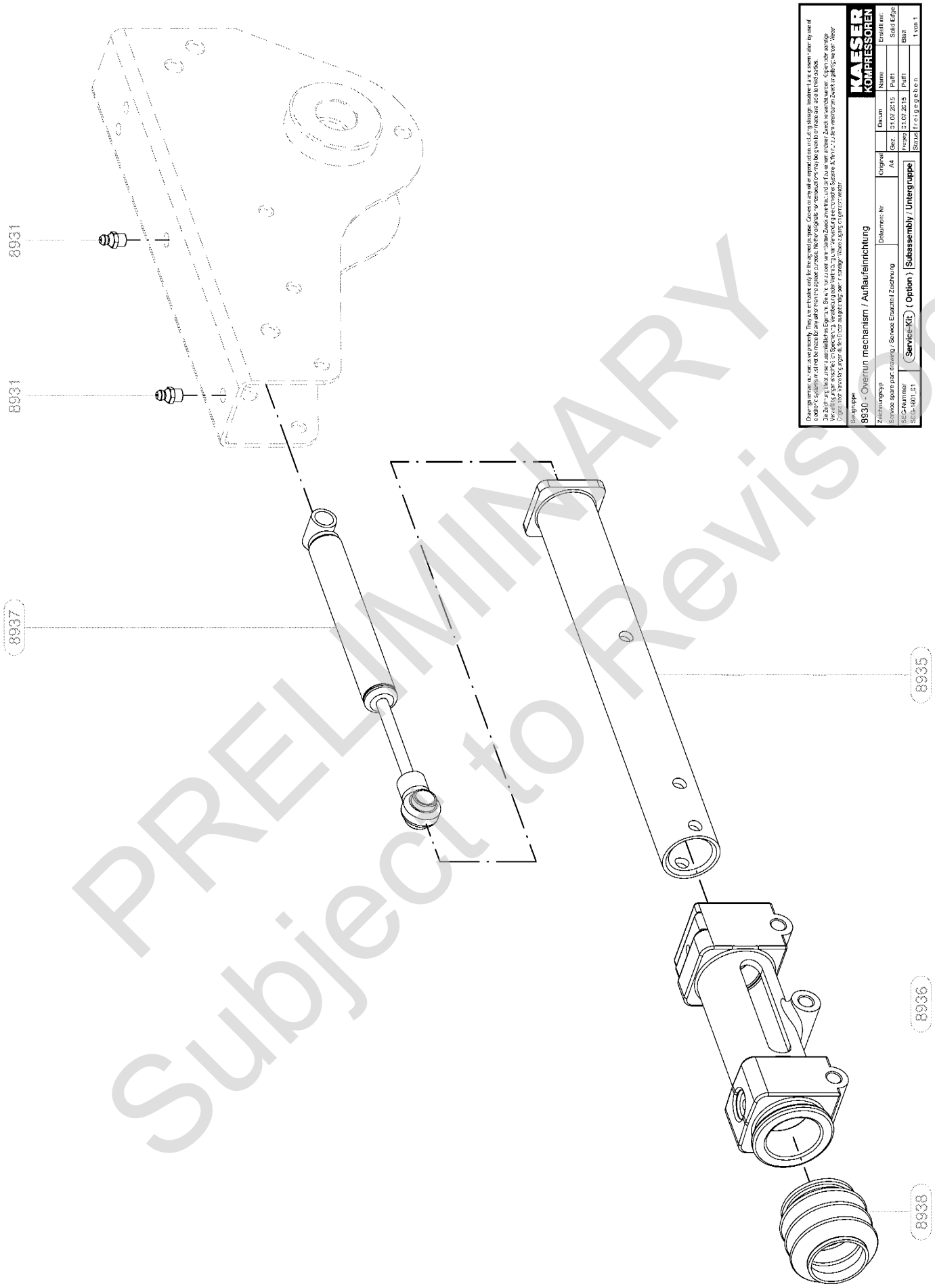

PRELIMINARY
Subject to Revision

Service-Kit (Option)

8960 Achse / Axle

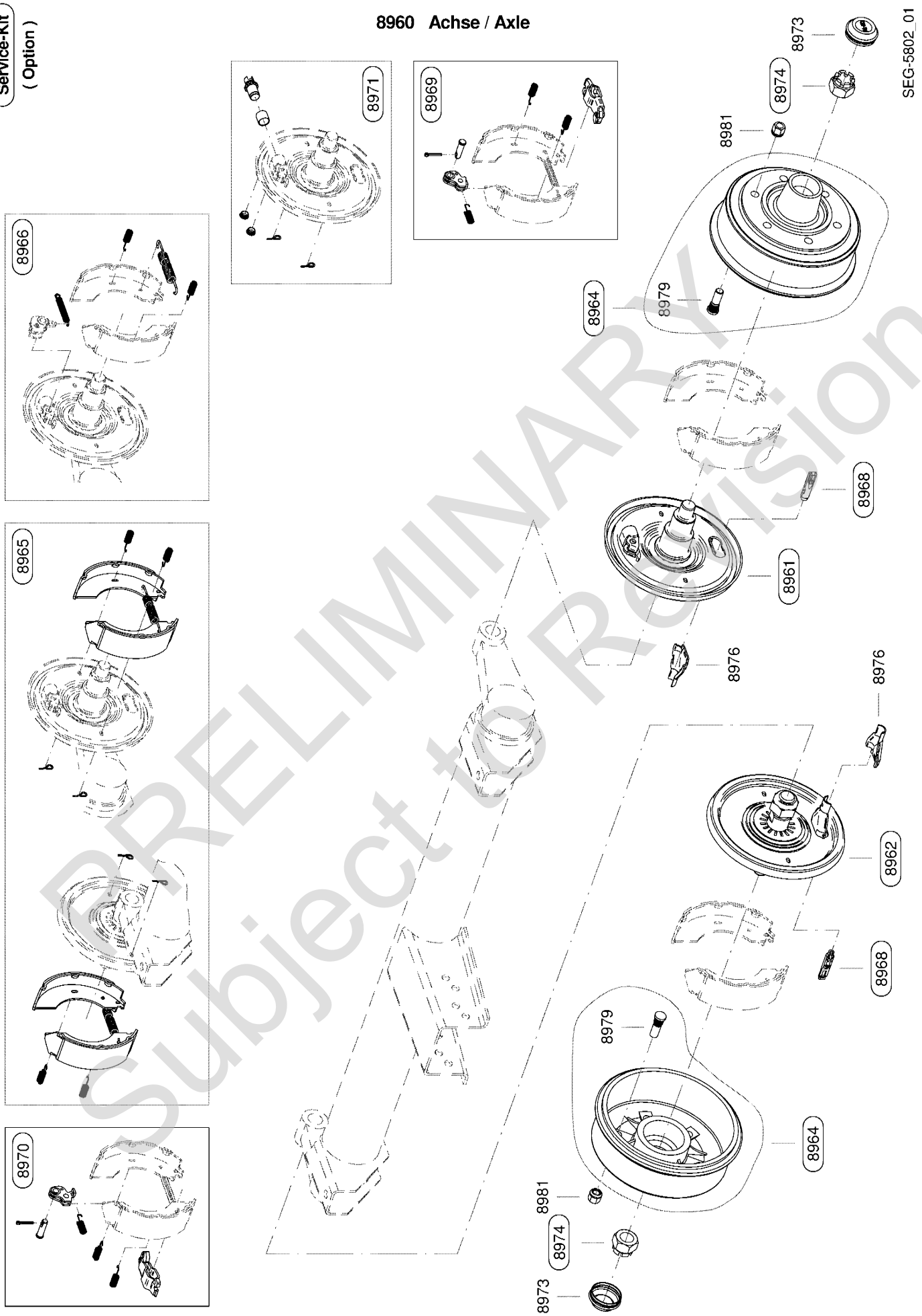

PRELIMINARY
Subject to Revision

Service-Kit (Option)

8900 Fahrwerk komplett / Chassis complete

SEG-5783_01

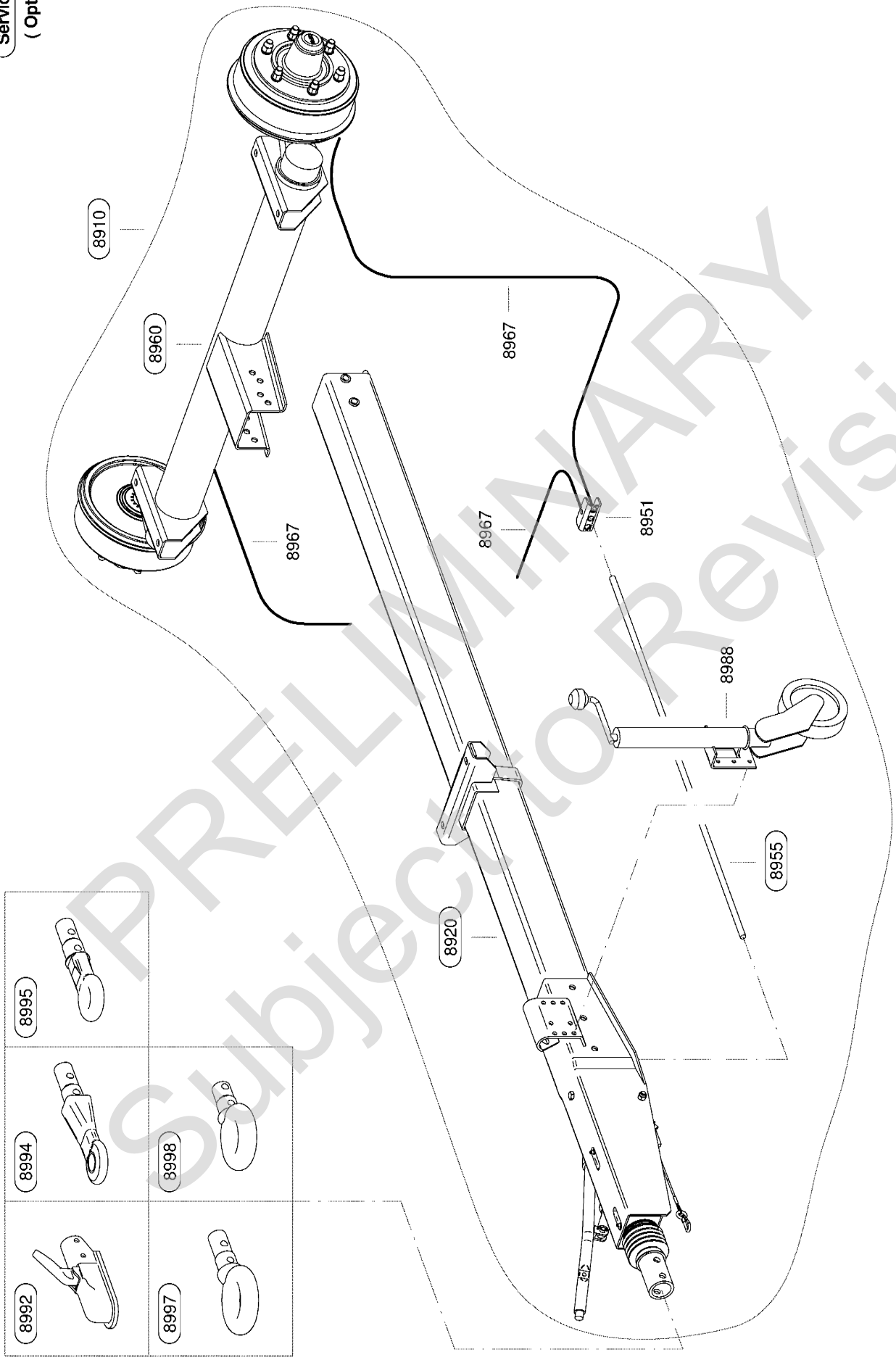

PRELIMINARY
Subject to Revision

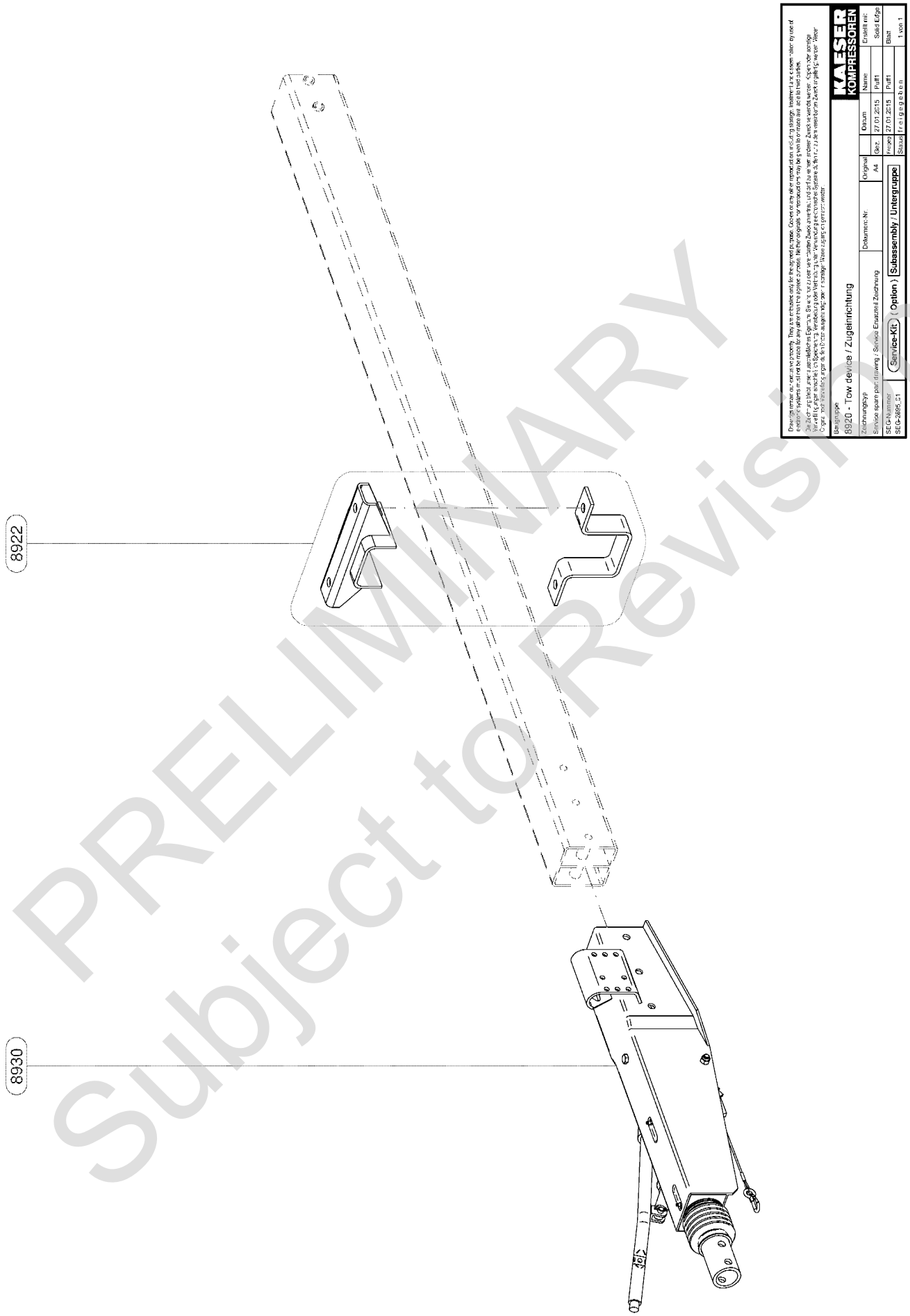

PRELIMINARY
Subject to Revision

Service-Kit

SEG-2696_01

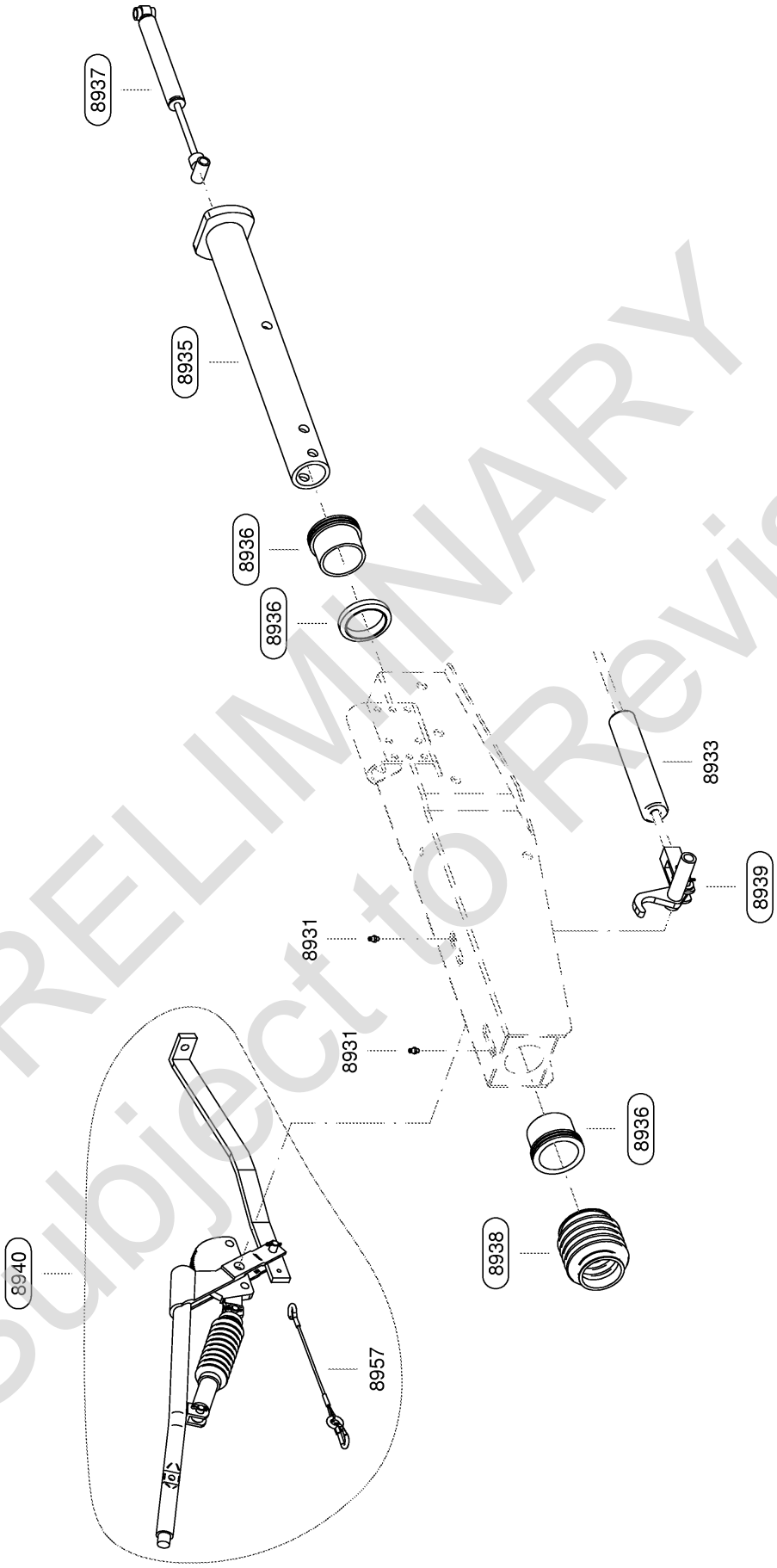

PRELIMINARY
Subject to Revision

Service-Kit (Option)

8960 Achse / Axle

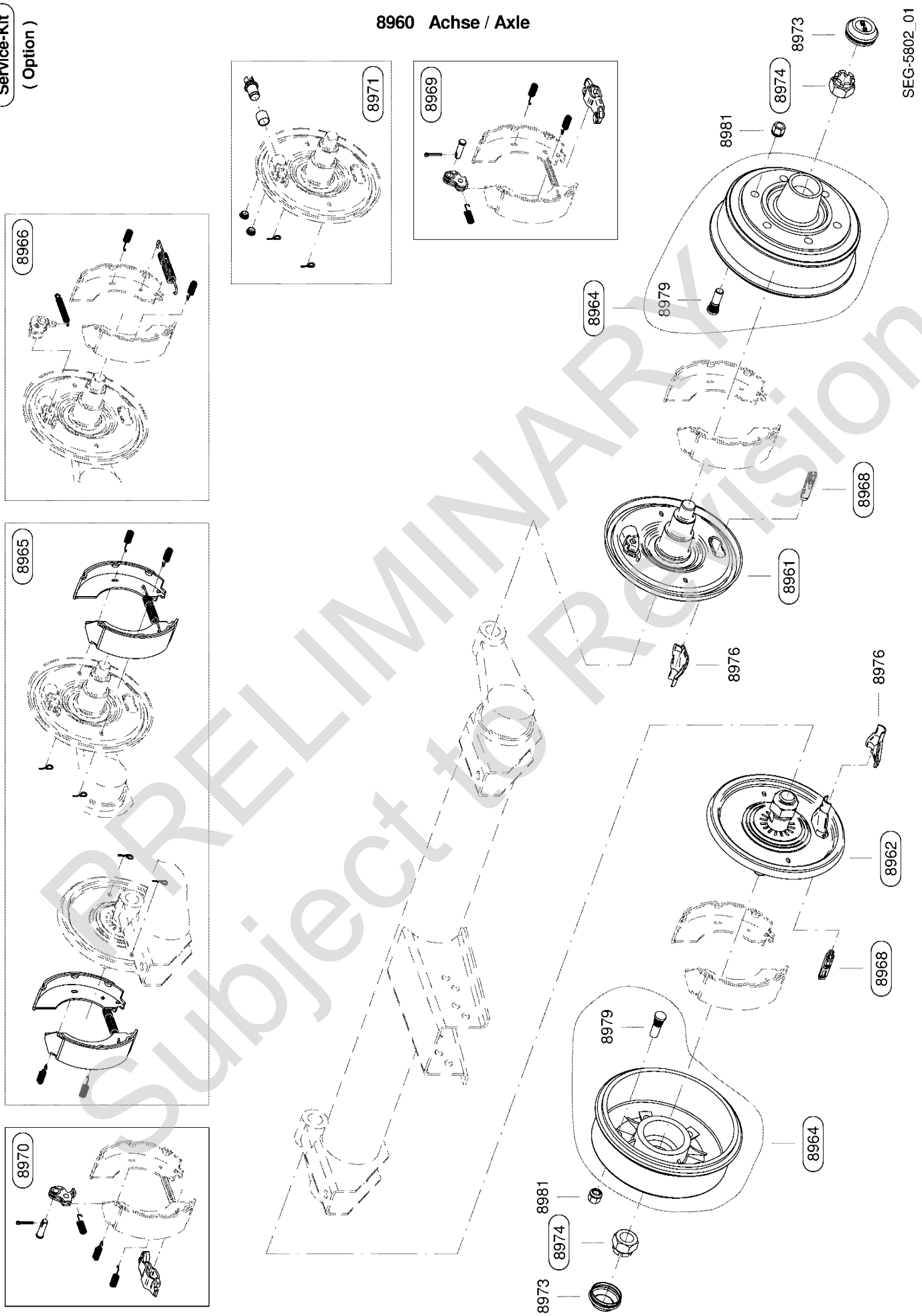

PRELIMINARY
Subject to Revision

Service-Kit (Option)

8900 Fahrwerk komplett / Chassis complete

SEG-5784_01

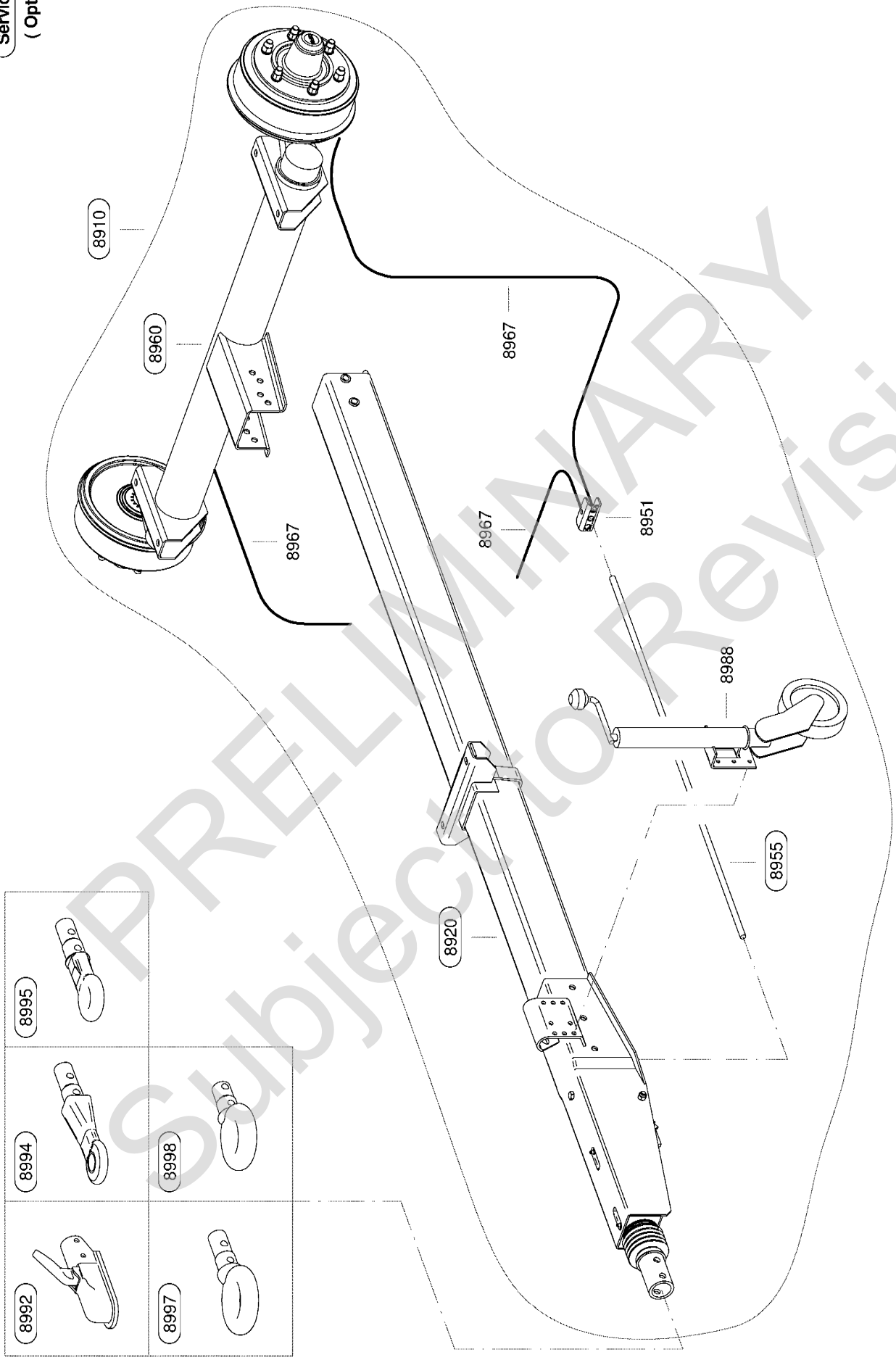

PRELIMINARY
Subject to Revision

Service-Kit

SEG-4110_01

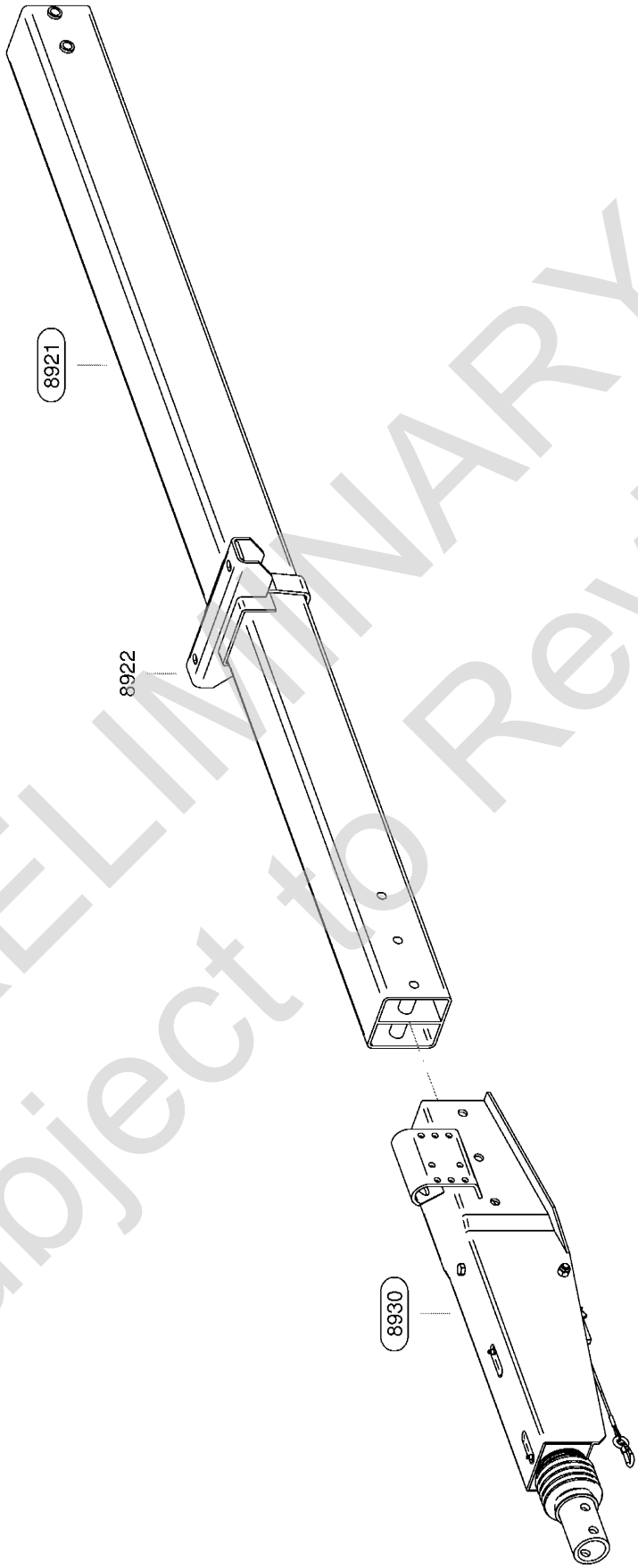

PRELIMINARY
Subject to Revision

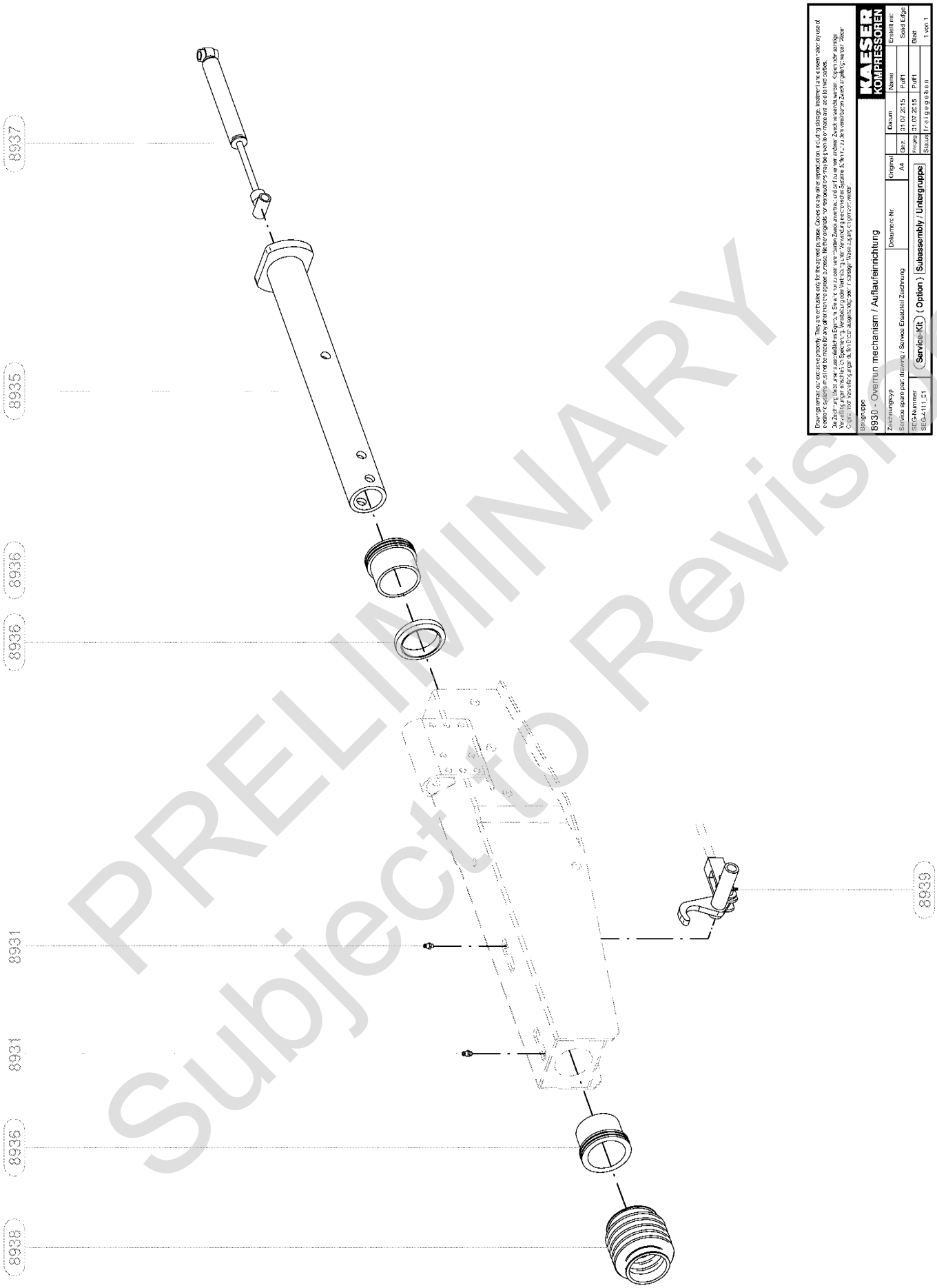

PRELIMINARY
Subject to Revision

Service-Kit (Option)

8960 Achse / Axle

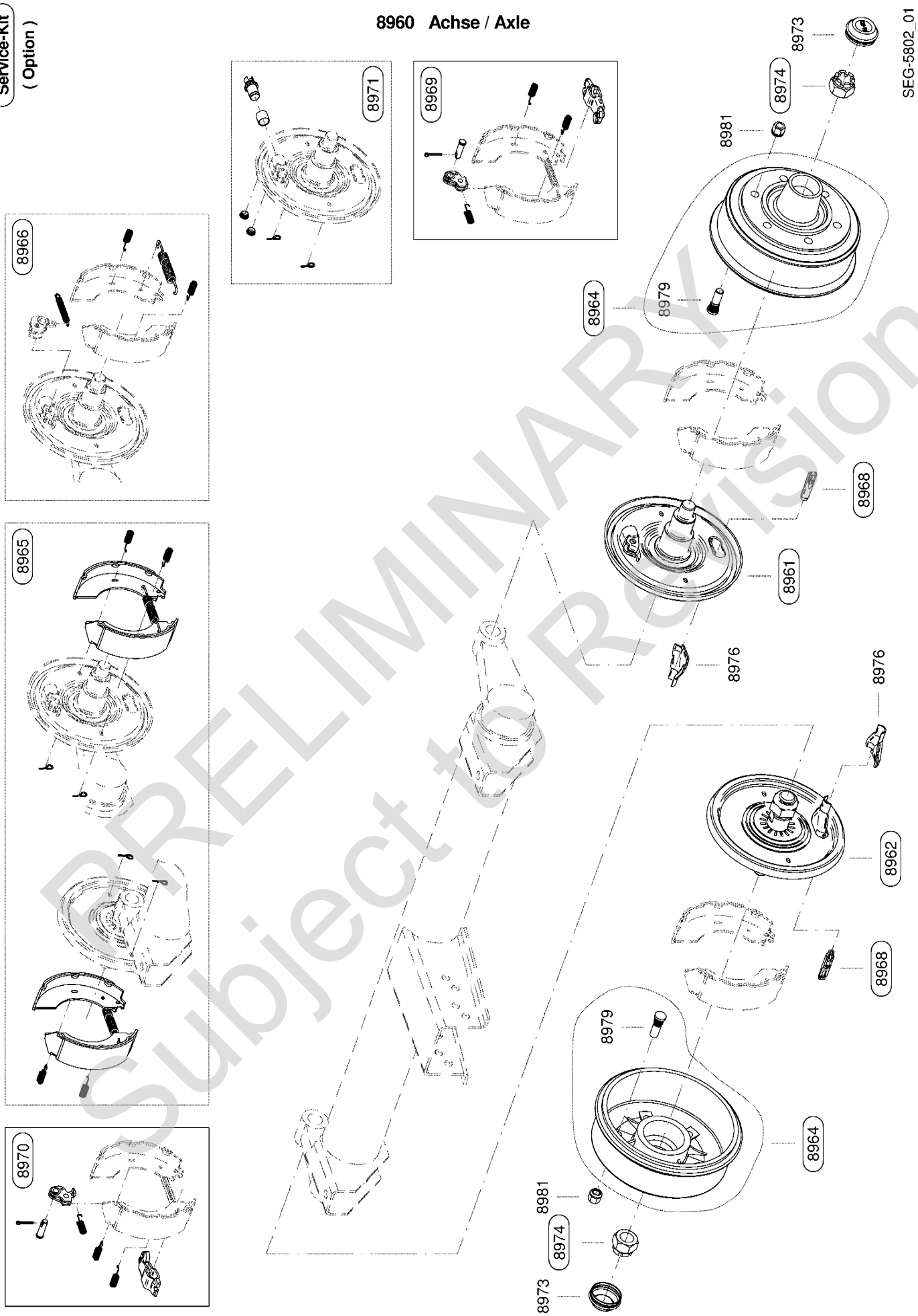

PRELIMINARY
Subject to Revision

Service-Kit (Option)

8900 Fahrwerk komplett / Chassis complete

SEG-5800_01

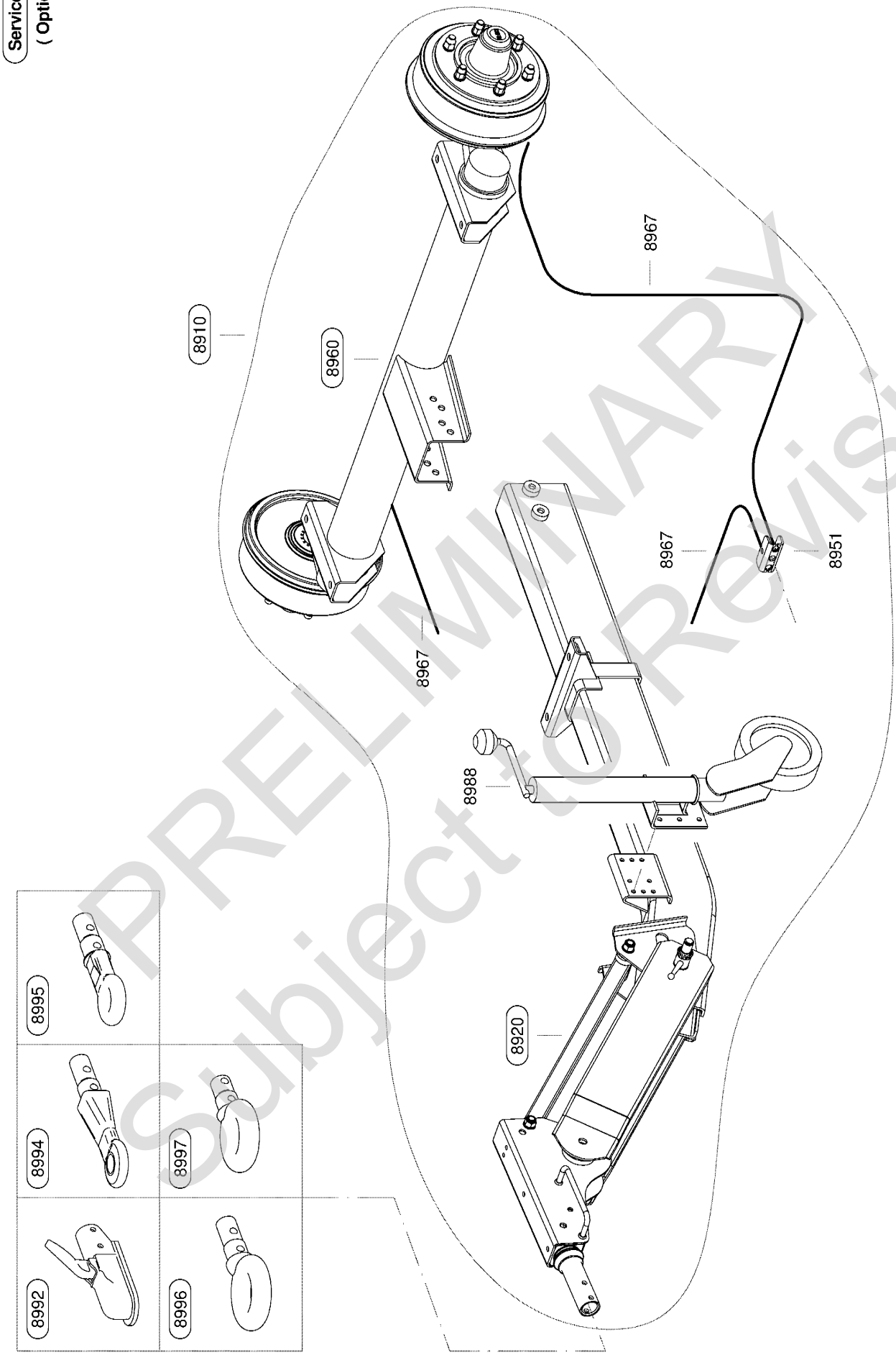

PRELIMINARY
Subject to Revision

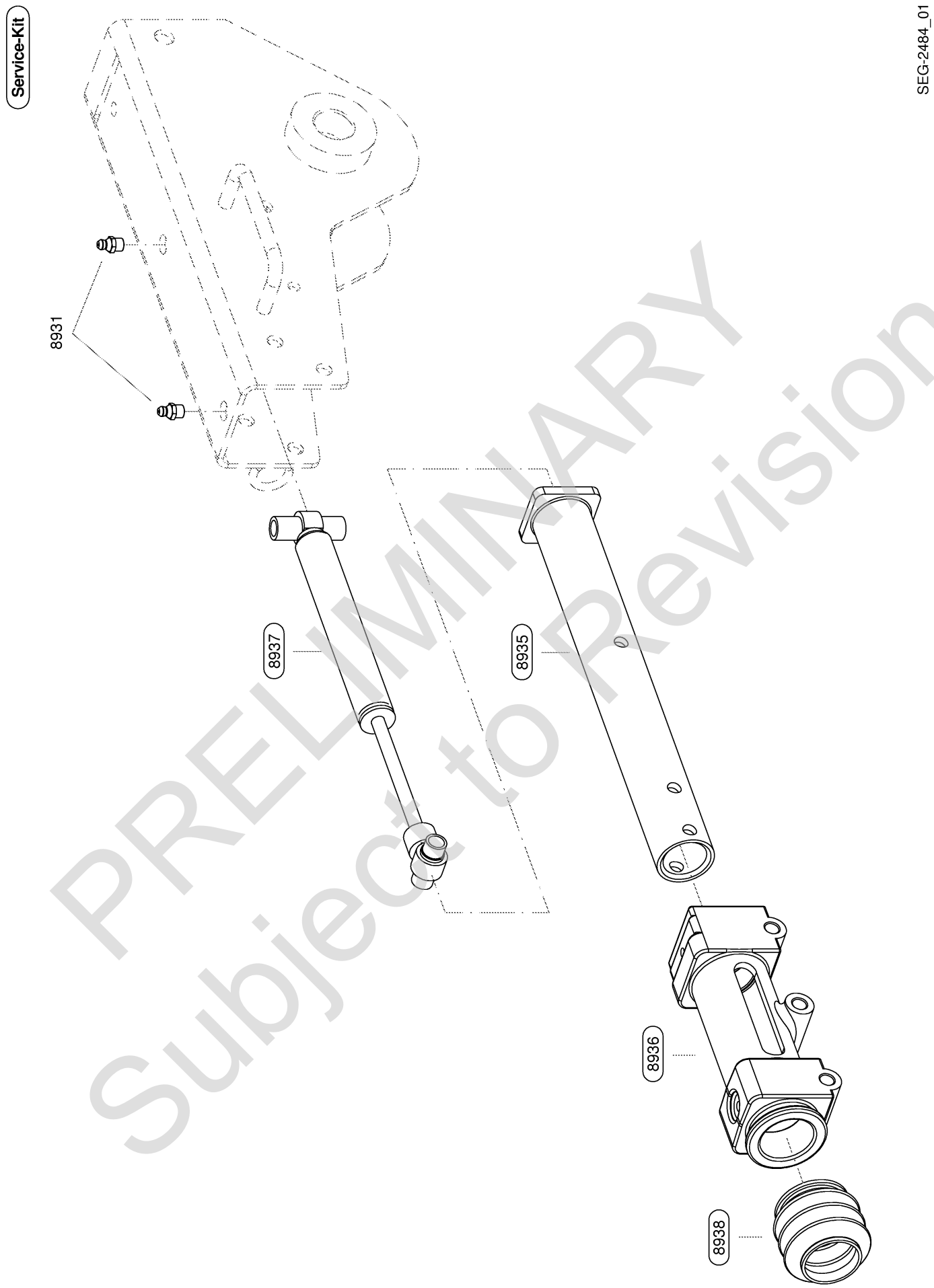

PRELIMINARY
Subject to Revision

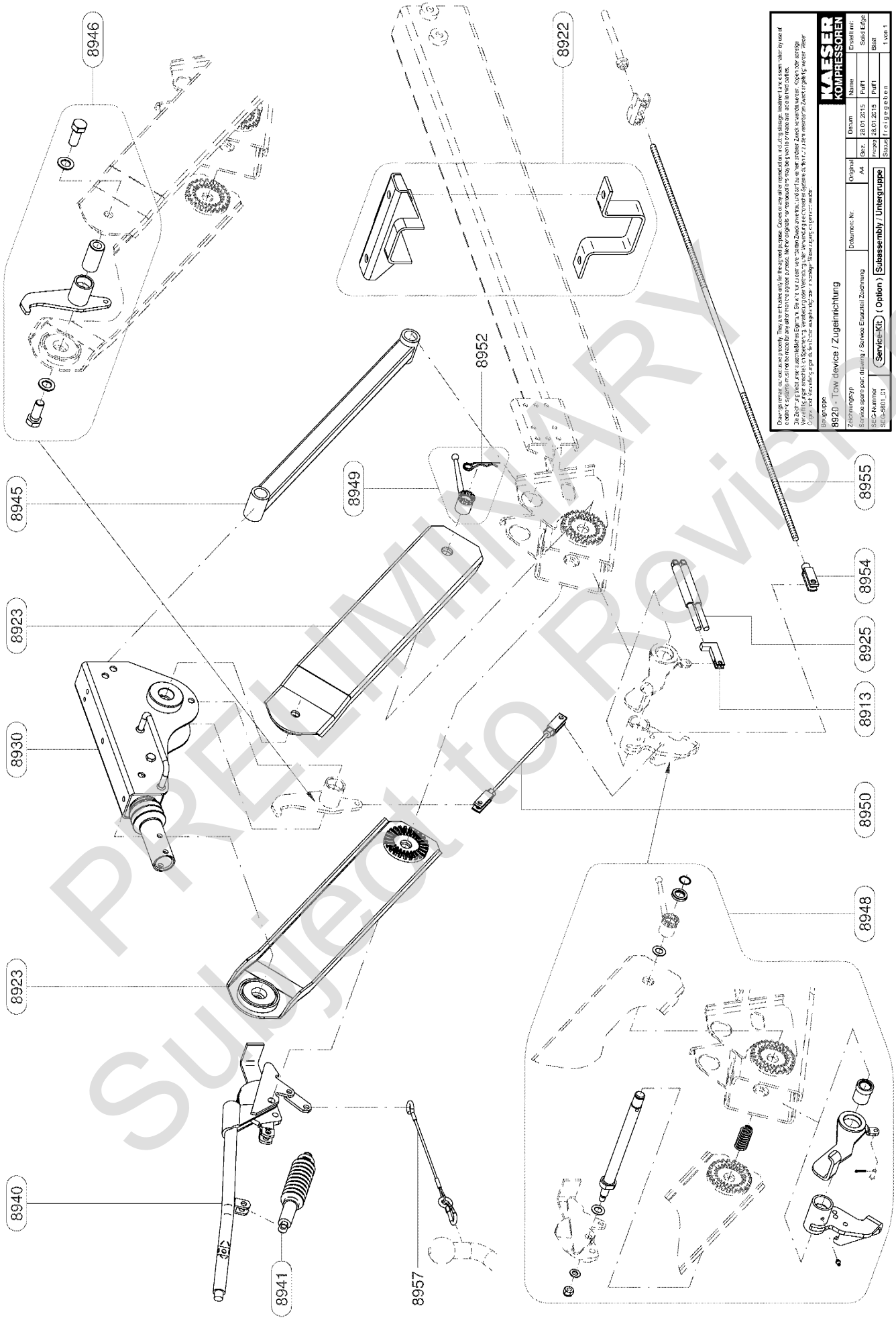

PRELIMINARY
Subject to Revision

Service-Kit (Option)

8960 Achse / Axle

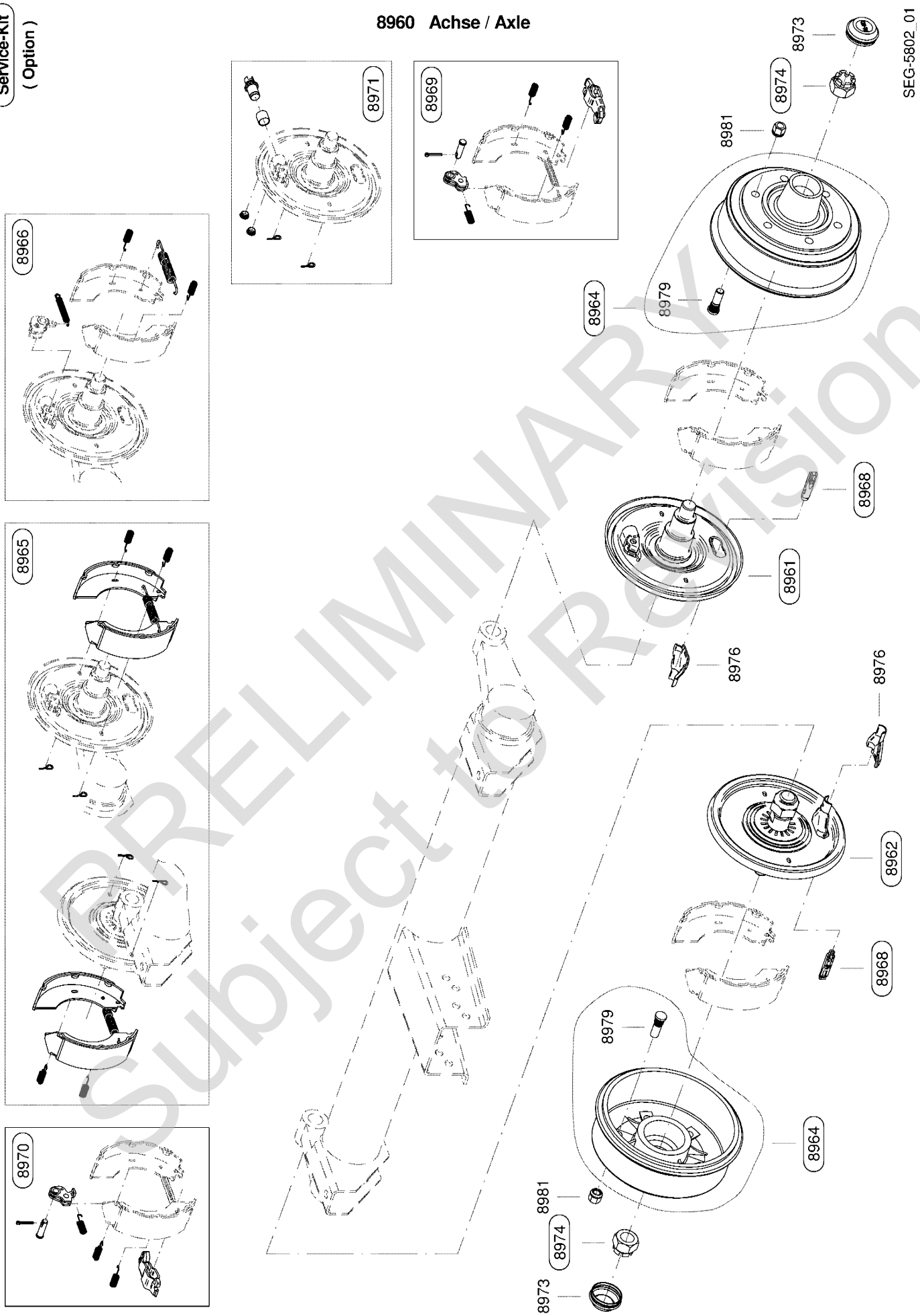

PRELIMINARY
Subject to Revision

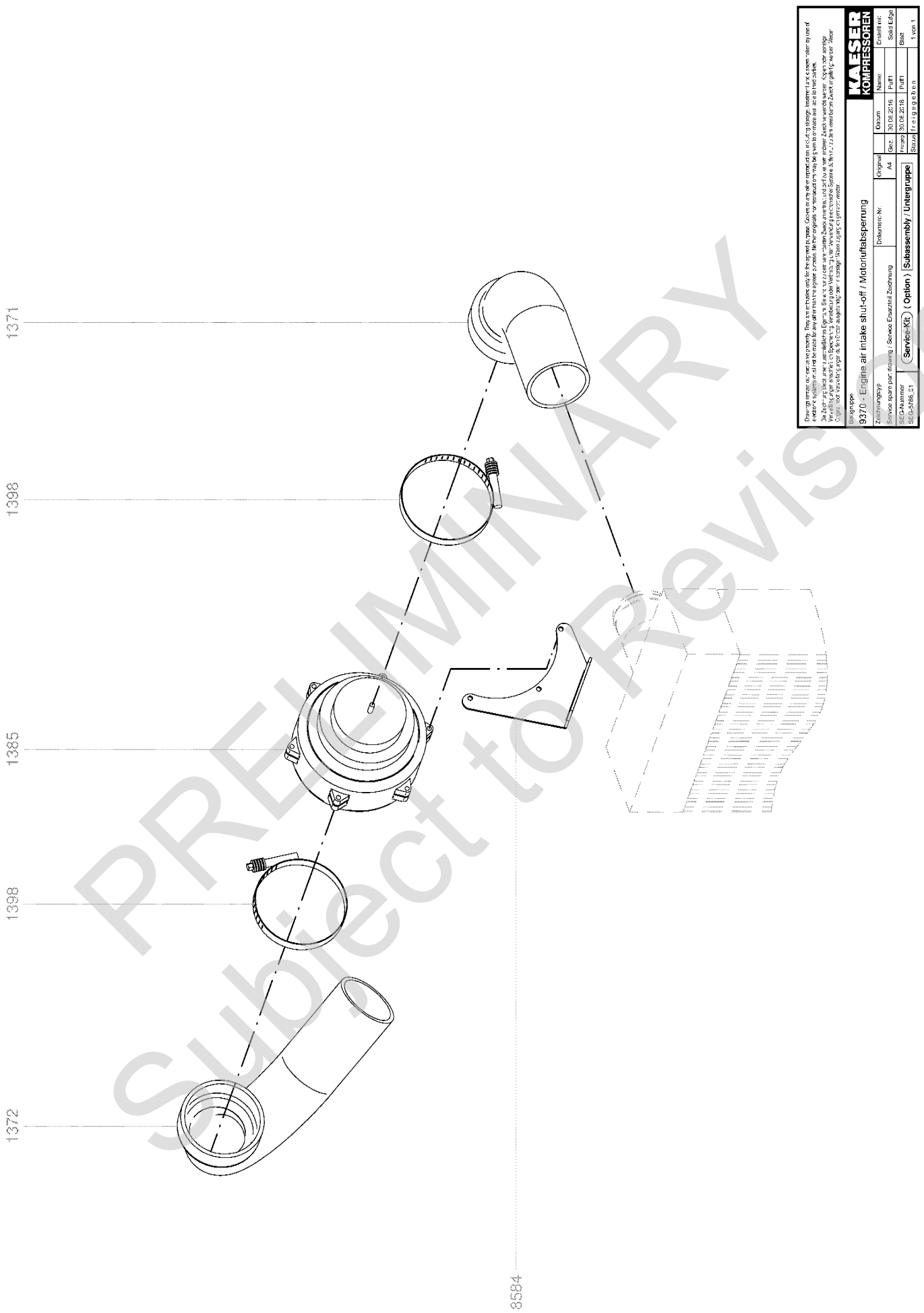

PRELIMINARY
Subject to Revision

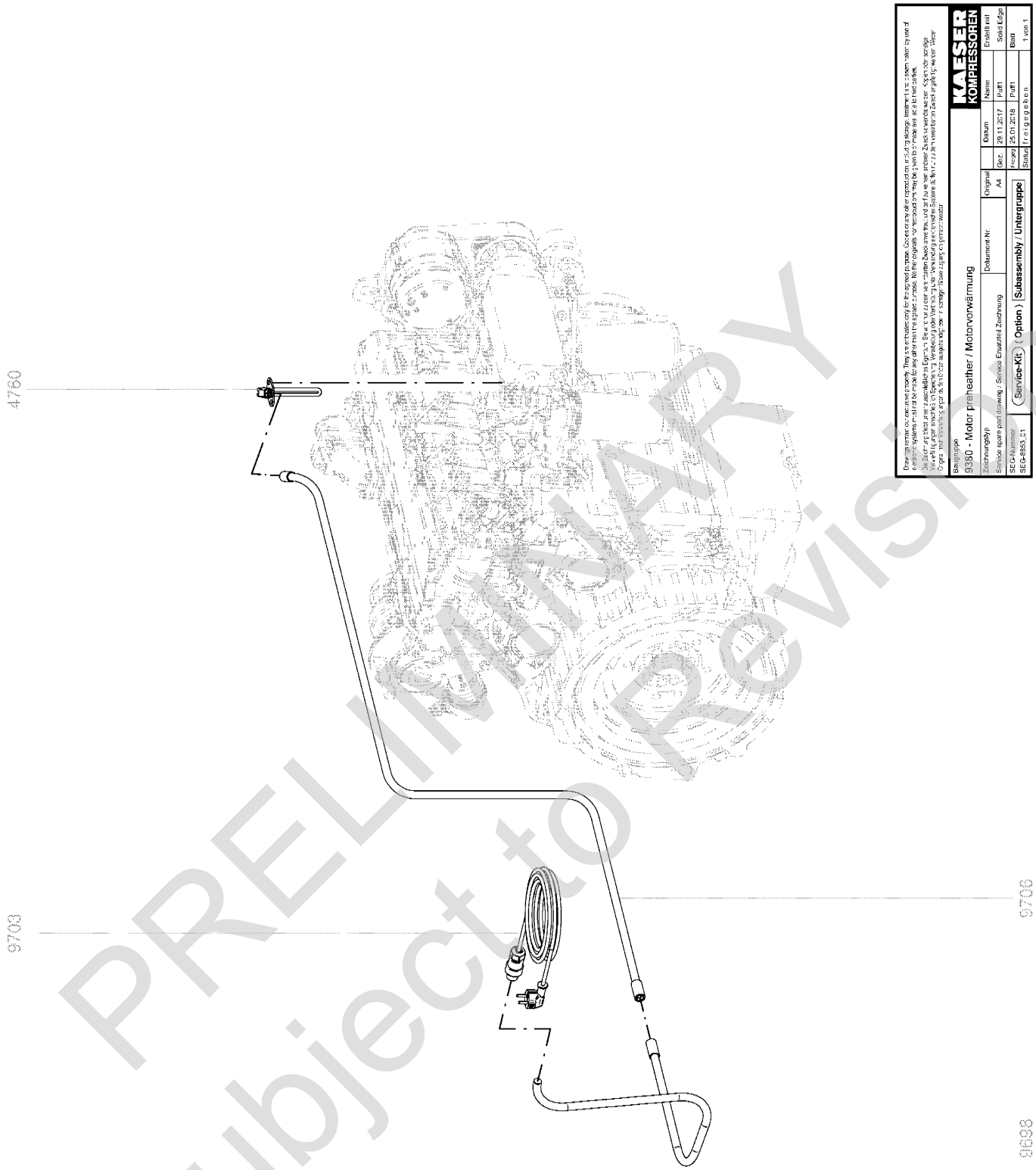

PRELIMINARY
Subject to Revision

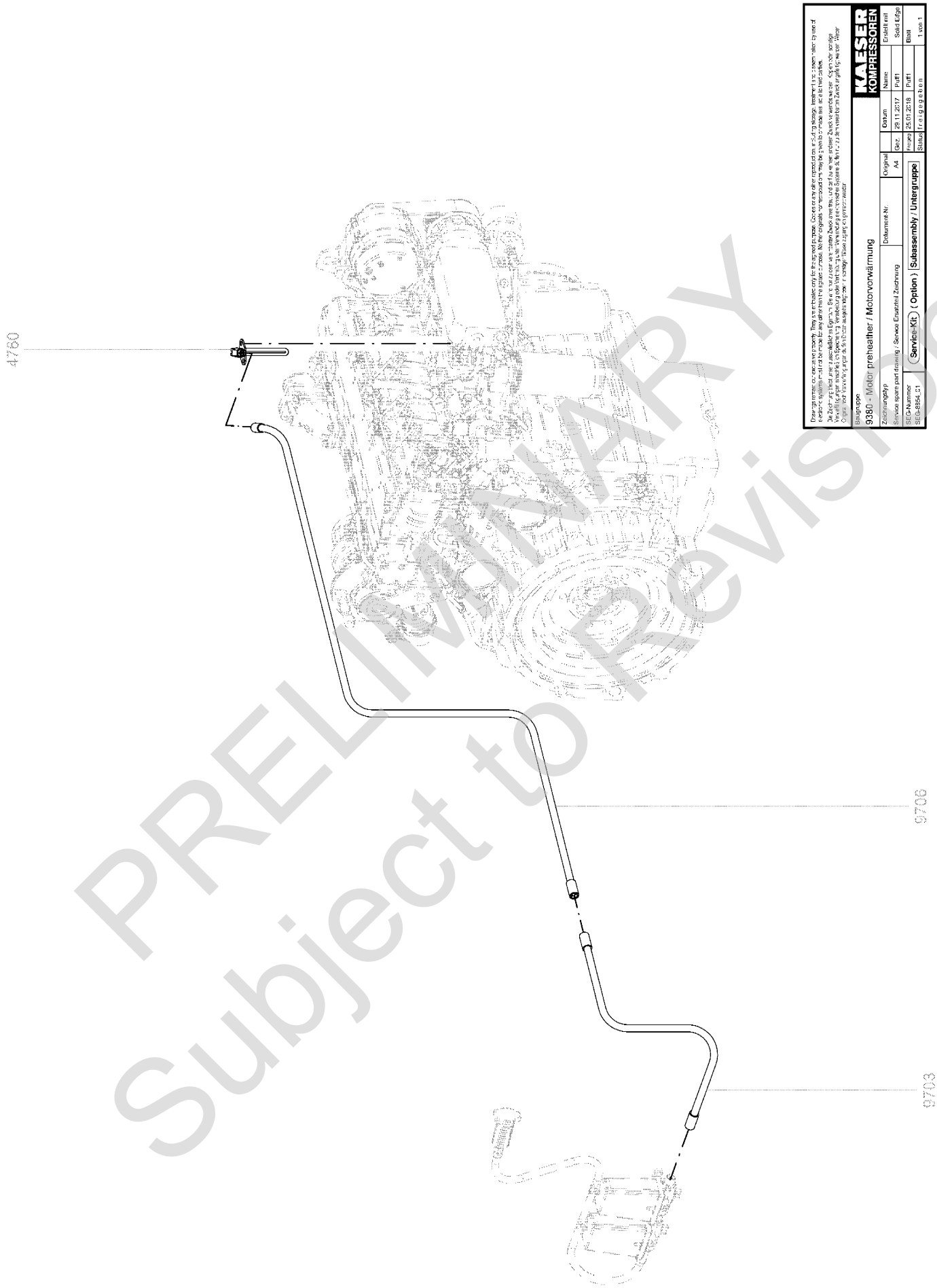

PRELIMINARY
Subject to Revision

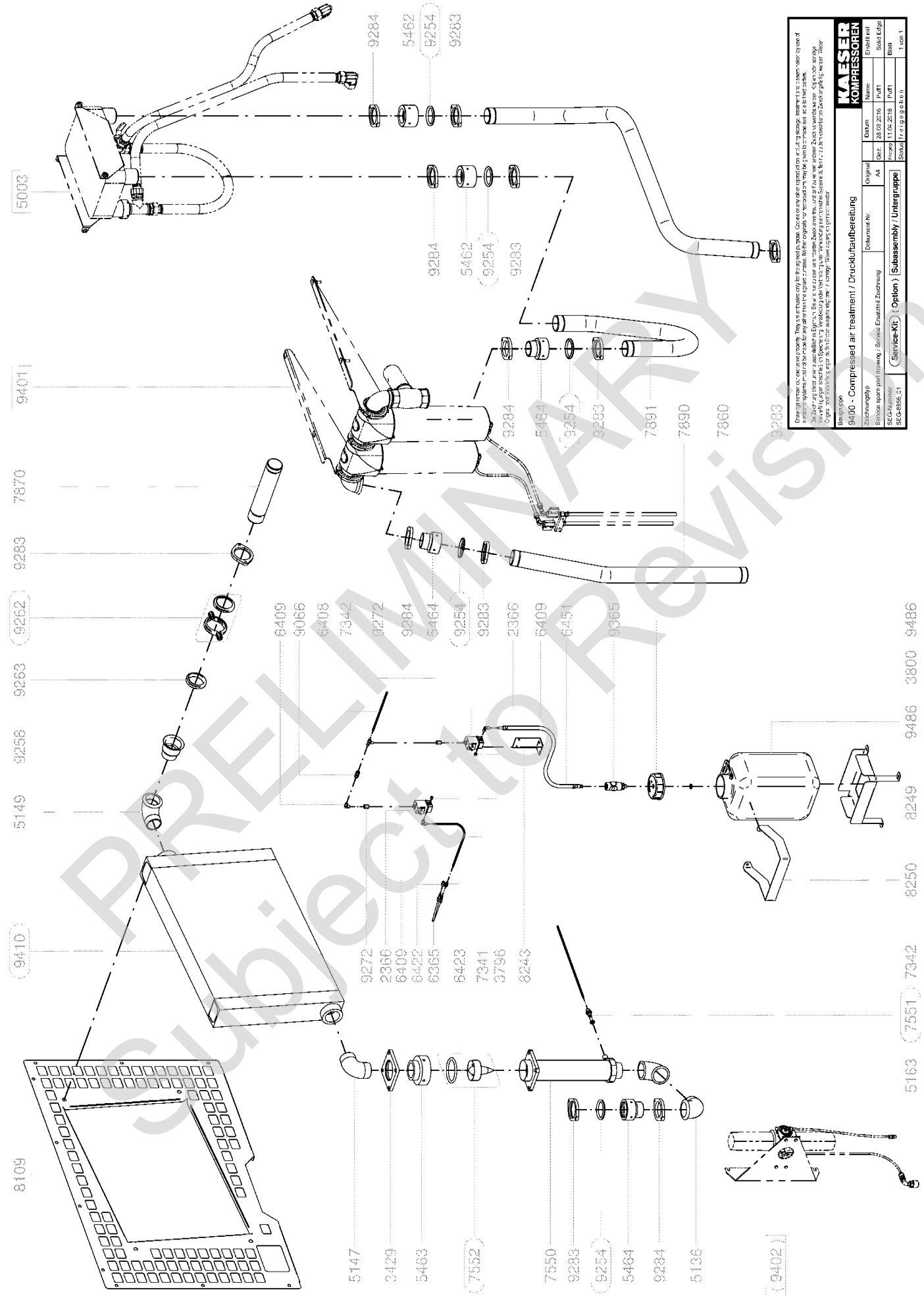

PRELIMINARY
Subject to Revision

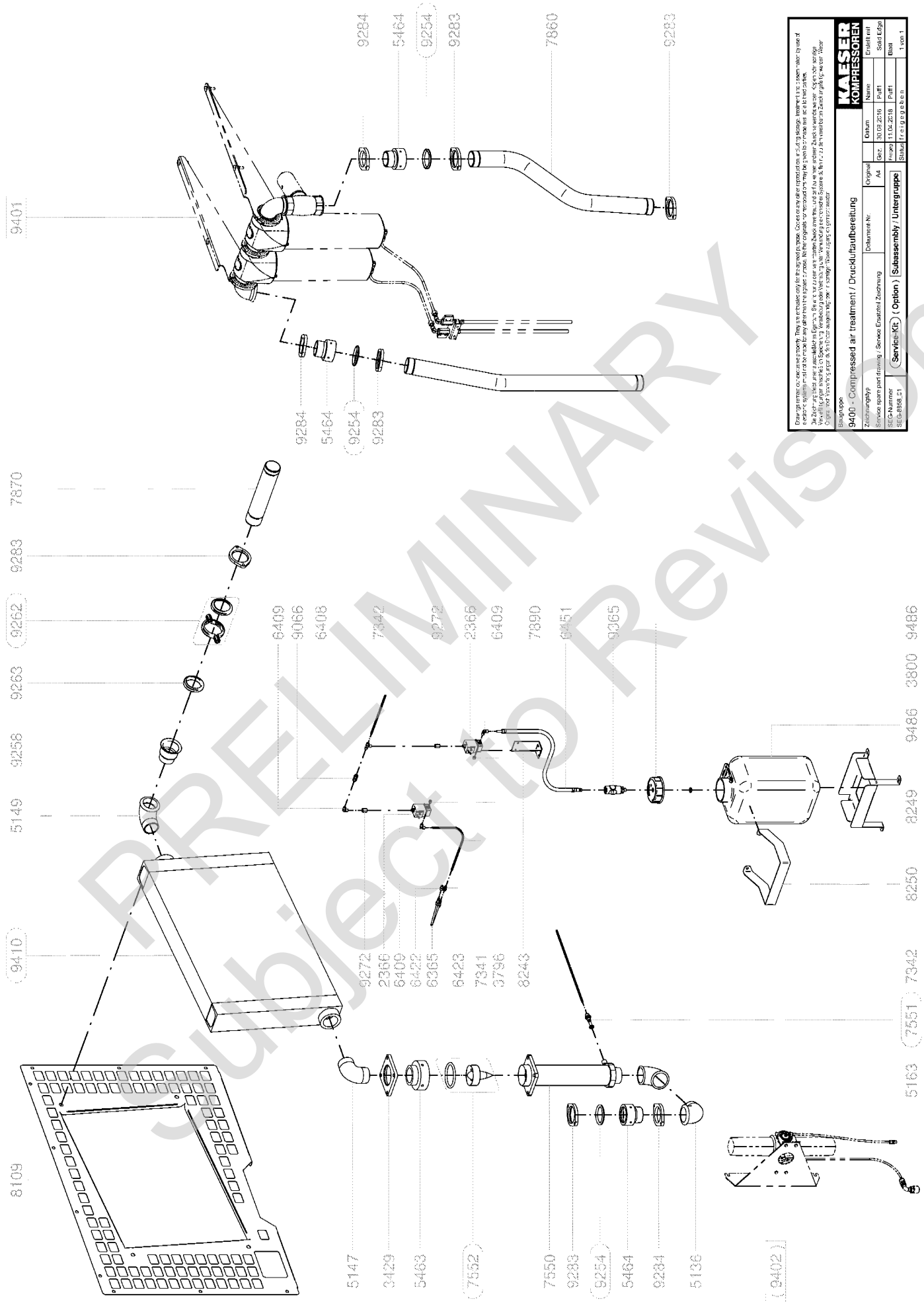

PRELIMINARY
Subject to Revision

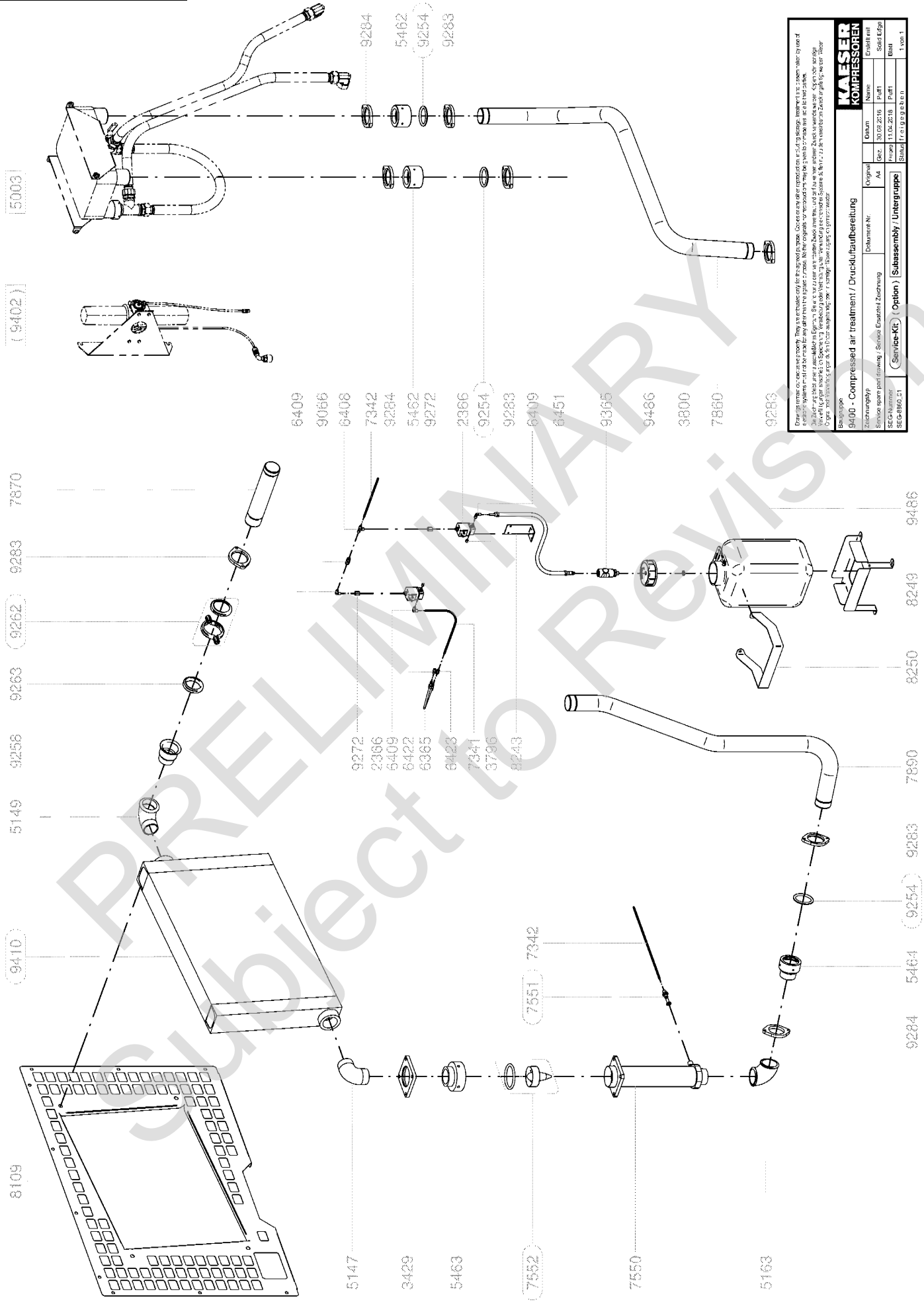

PRELIMINARY
Subject to Revision

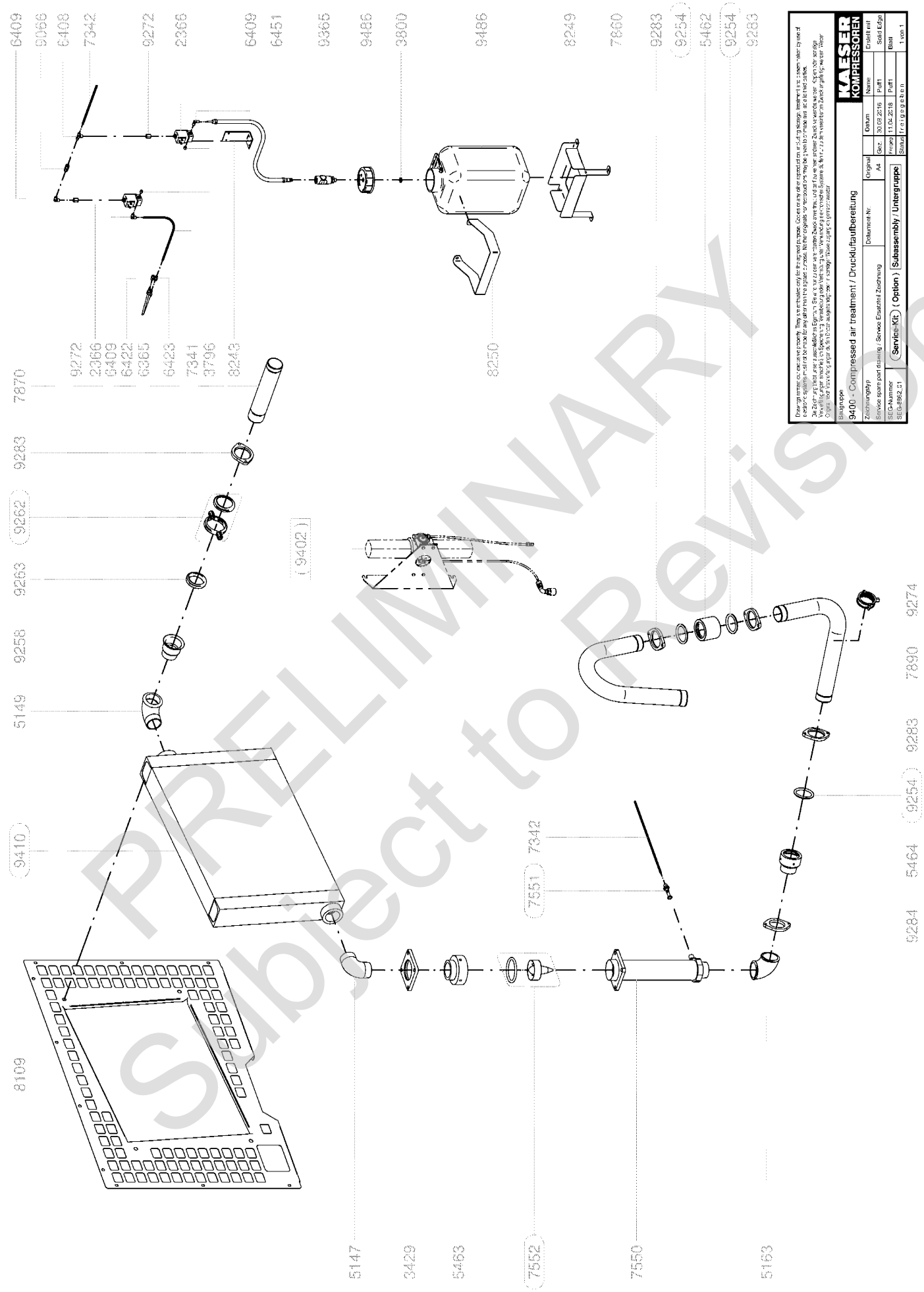

PRELIMINARY
Subject to Revision

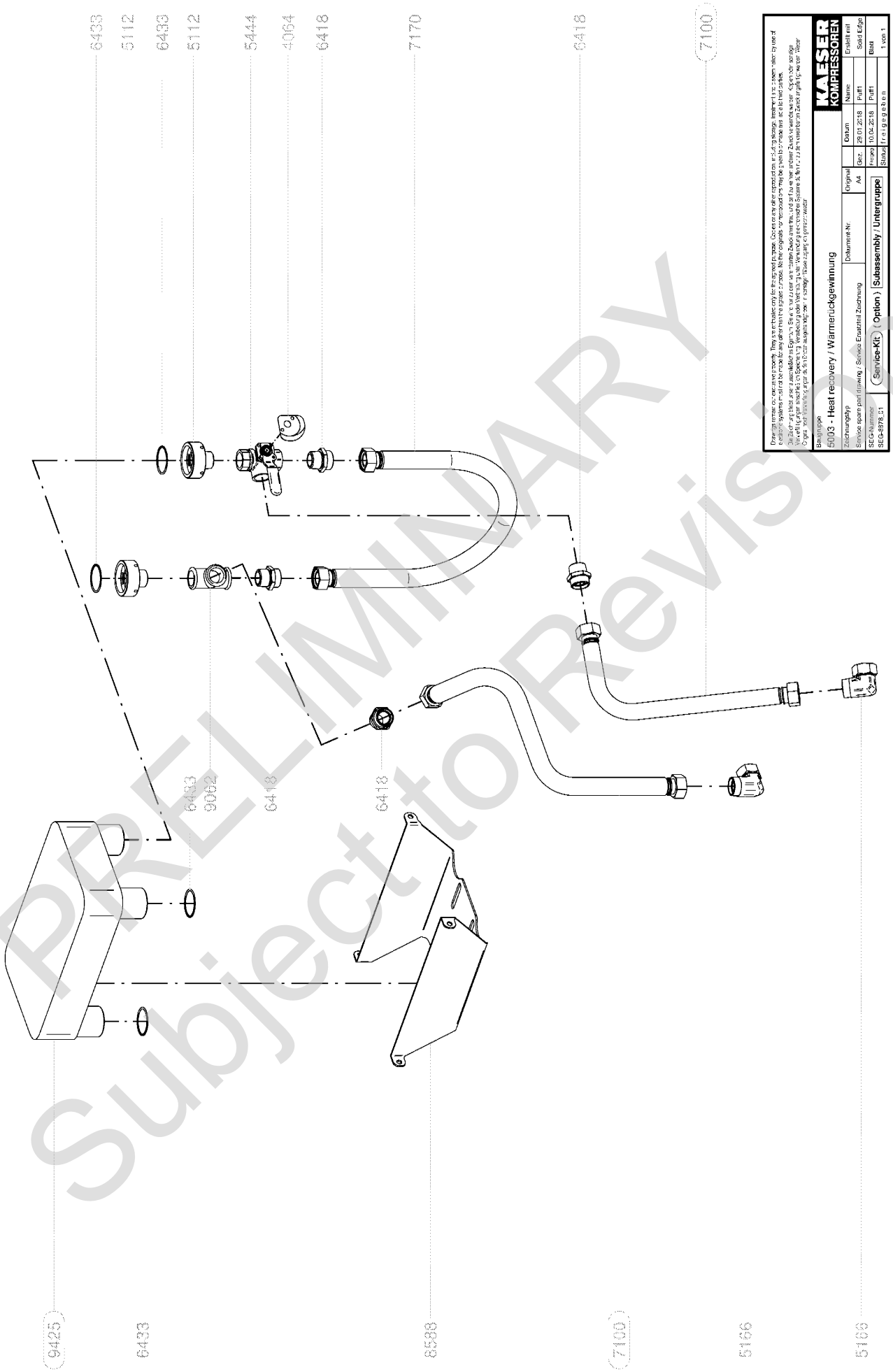

PRELIMINARY
Subject to Revision

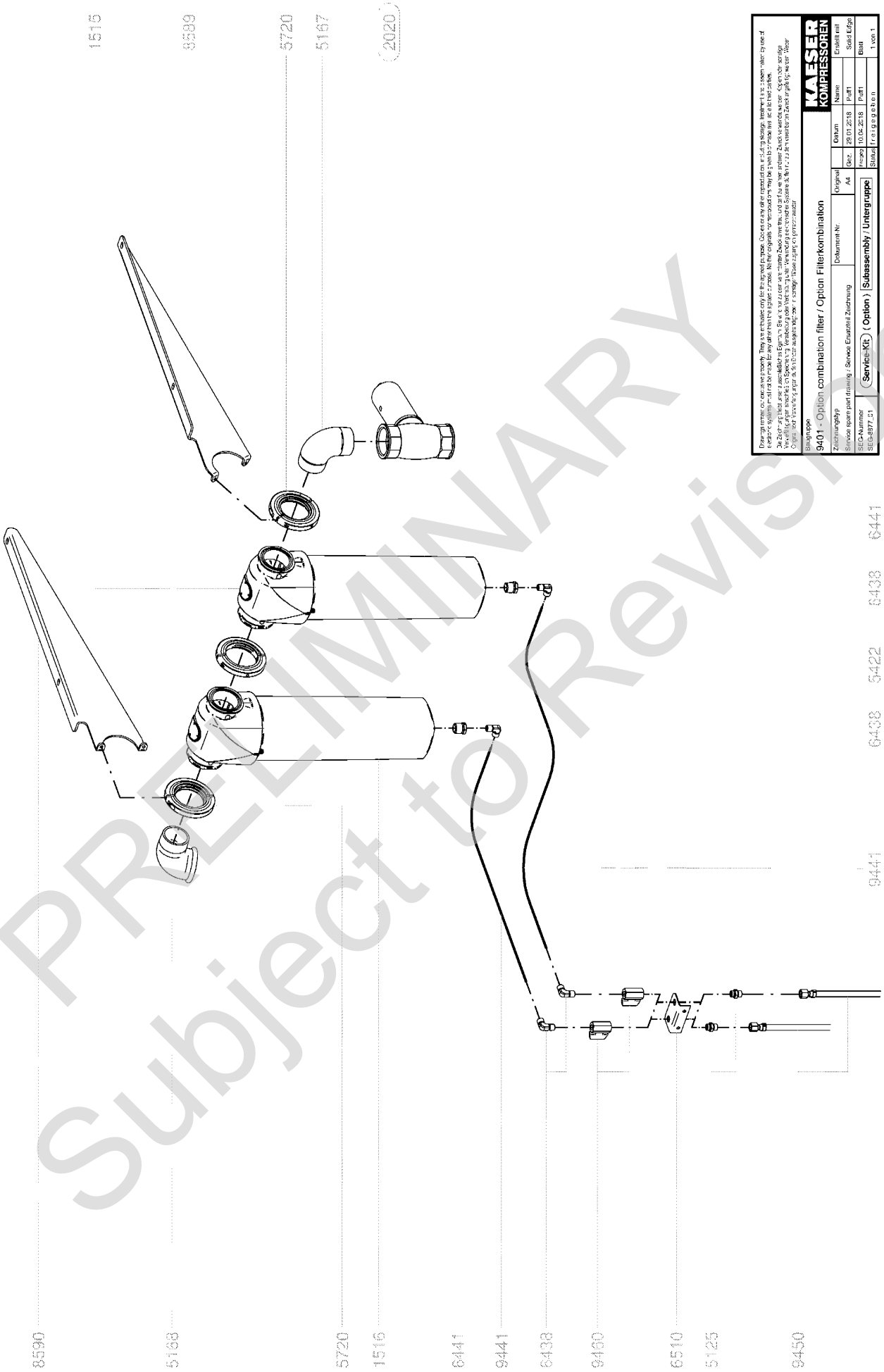

PRELIMINARY
Subject to Revision

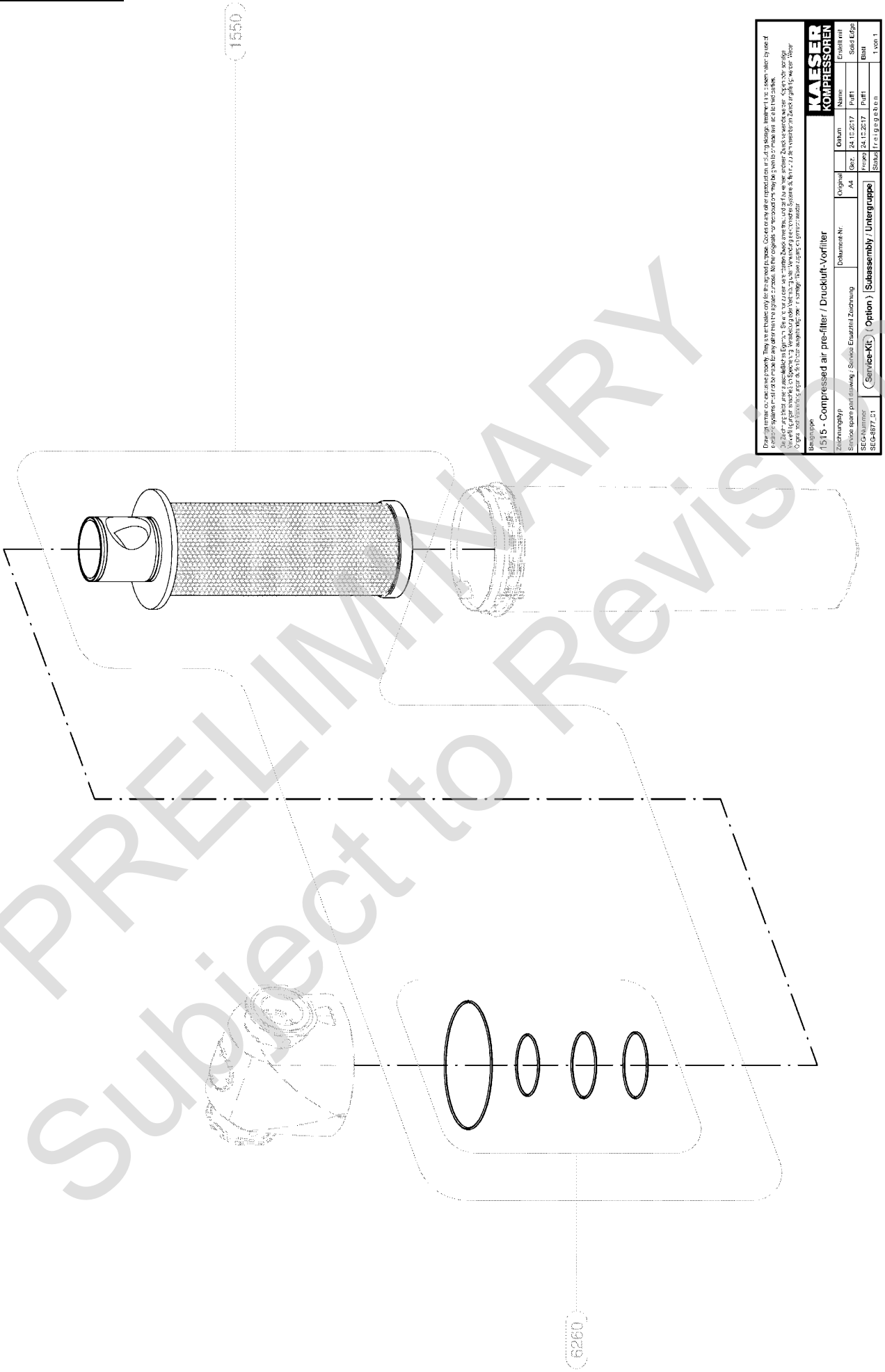

PRELIMINARY
Subject to Revision

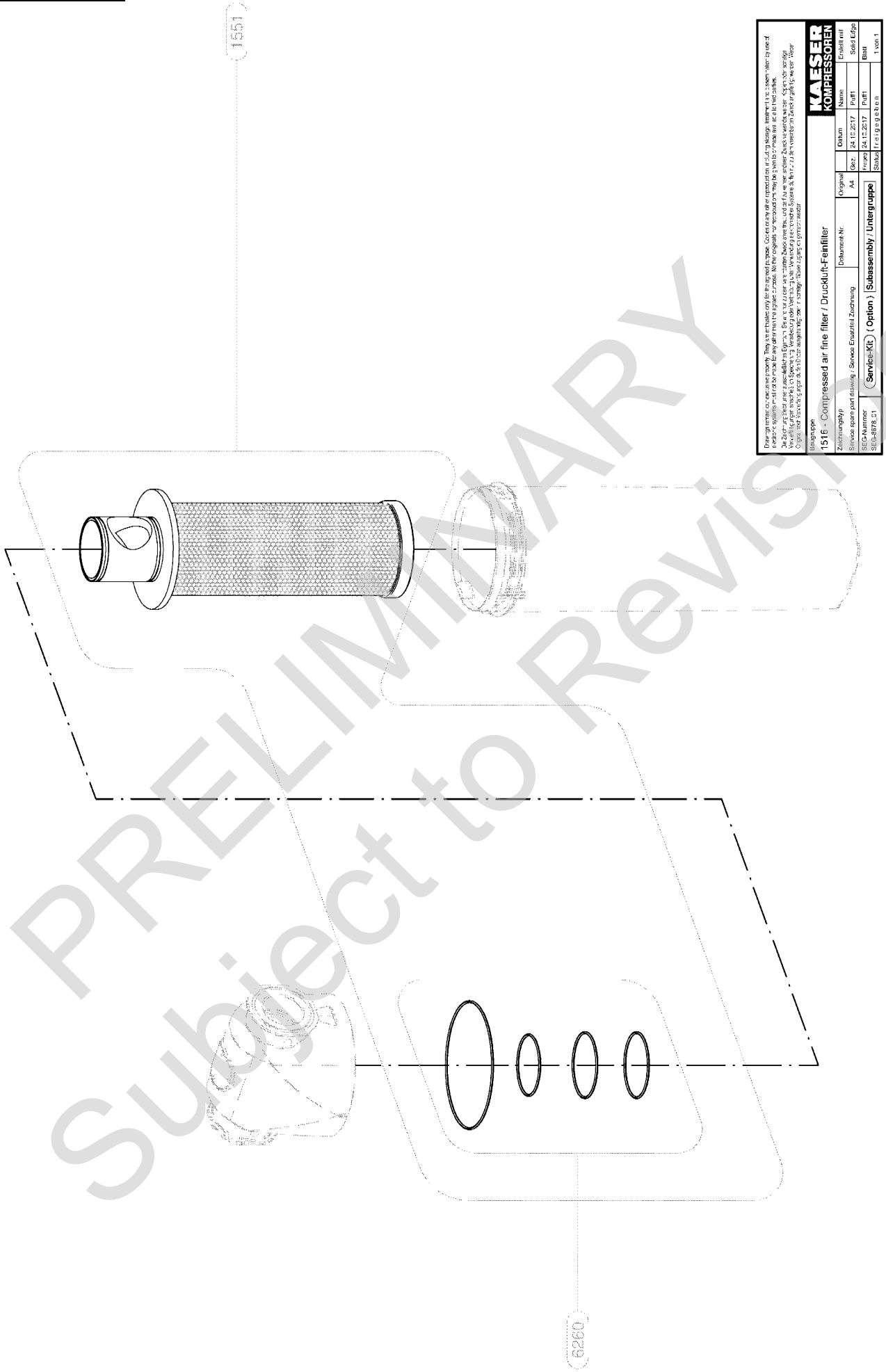

PRELIMINARY
Subject to Revision

Service-Kit (Option)

9402 Option Frischluftfilter / Option fresh air filter

SEG-5795_01

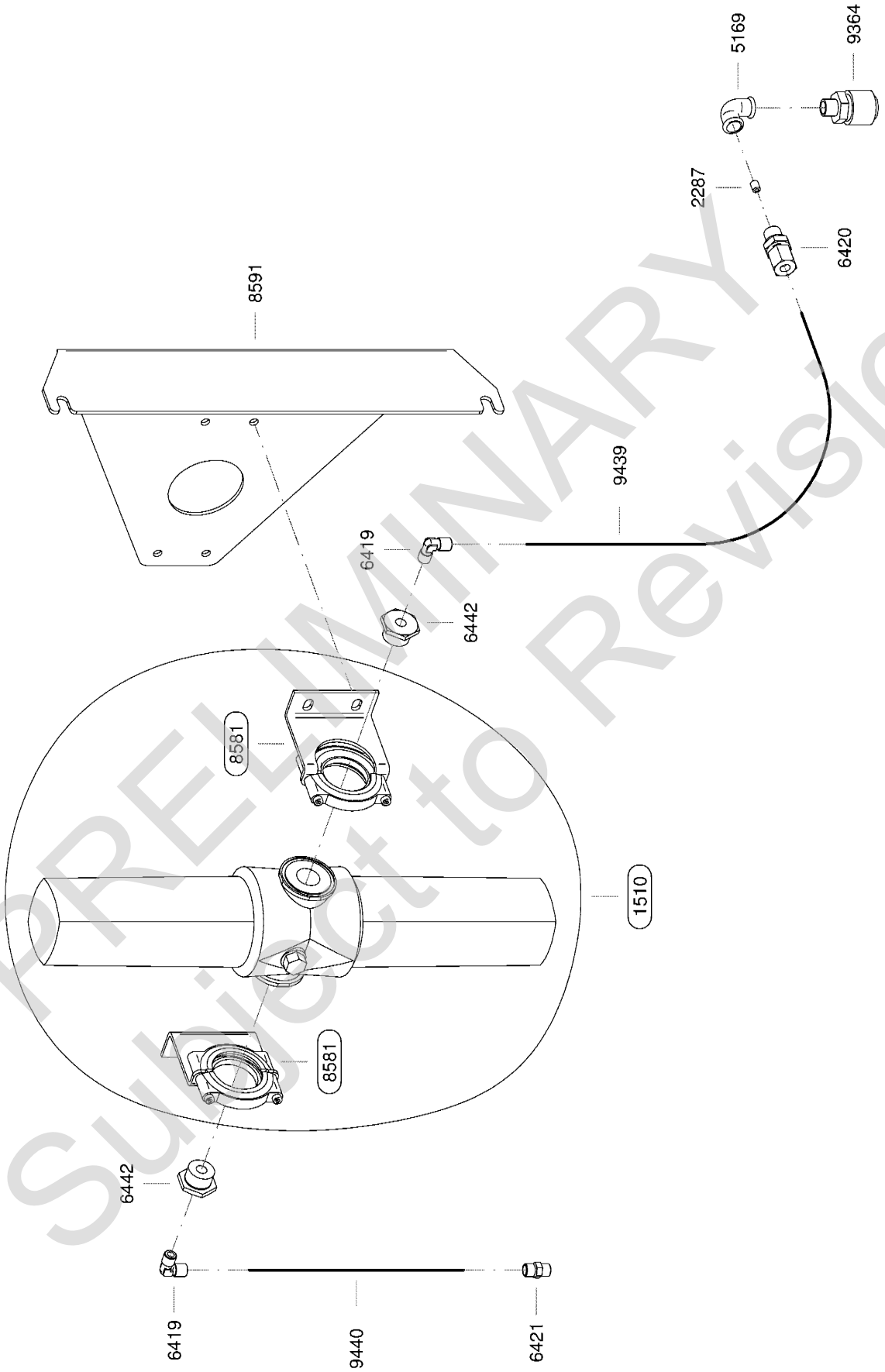

PRELIMINARY
Subject to Revision

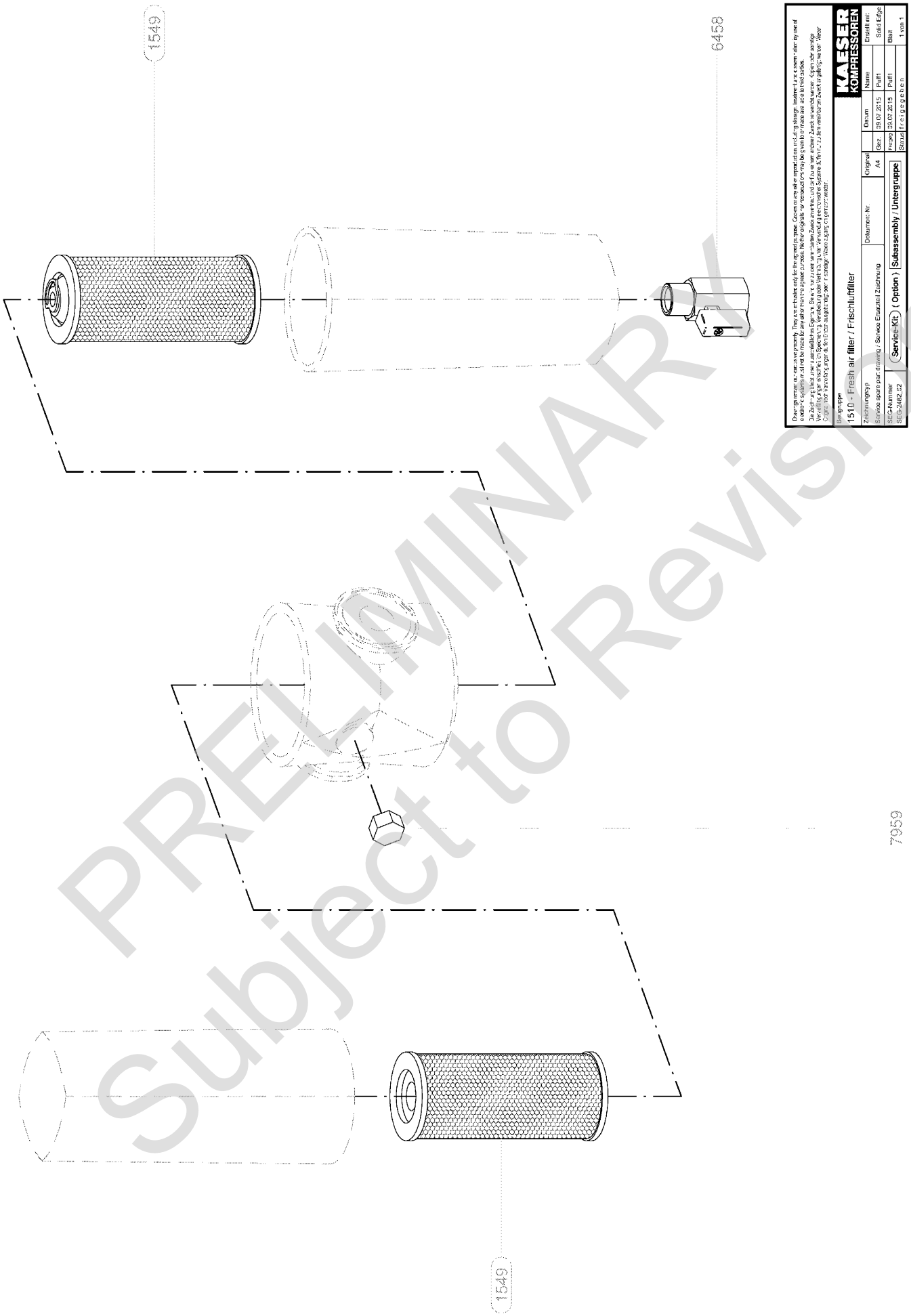

PRELIMINARY
Subject to Revision

12 Decommissioning, Storage and Transport

12.1 De-commissioning

De-commissioning is necessary, for example, under the following circumstances:

- The machine is temporarily not needed
- The machine will not be needed for a considerable time.
- The machine is to be scrapped.

Precondition The machine is shut down.
Machine dry and cool.

1. Carry out the following de-commissioning procedures.
2. Place a notice on the instrument panel describing the de-commissioning procedures carried out.

12.1.1 Temporary de-commissioning

Decommissioning for about 4 months.

Material Plastic sheeting
Moisture-resistant adhesive tape

1. Disconnect the battery (the negative terminal first and then the plus terminal).
2. Close off the following openings with plastic foil and moisture-resistant adhesive tape.
   - Engine air inlet
   - Compressor air inlet
   - Exhaust silencer
3. Attach the following notice on the instrument panel showing the decommissioning measures taken.

Attention! 1. The machine is temporarily decommissioned. 2. The following machine openings have been covered: ■ Engine air inlet ■ Compressor air inlet ■ Exhaust silencer 3. Recommission according to service manual. Date / signature

Tab. 93 "Temporarily decommissioned" information notice

Decommissioning of the compressor for several weeks during severe frost

1. **NOTICE** *Danger of batteries freezing!*
   Discharged batteries are subject to frost damage and can freeze at 14°F.
   ➤ *Store batteries in a frost-free place.*
   ➤ *Store batteries preferably fully charged.*

PRELIMINARY Subject to Revision

2. Remove the battery (batteries) and store in a frost-free room.
3. Make sure batteries are fully charged.

12.1.2 Long-term decommissioning and storage

Decommissioning the machine for 5 months or longer.

Material
Receptacle
Preserving oil
Preservative
Desiccant
Plastic sheeting
Moisture-resistant adhesive tape

➤ The following measures must be taken for long-term decommissioning and storage:

Long-term decommissioning and storage tasks	See chapter	Confirmed?
➤ Check engine coolant.	10.4.1	
➤ Drain the engine oil.	10.4.6	
➤ Drain the oil from the oil separator tank and the oil cooler.	10.5.3	
➤ Fill the separator tank and engine with preserving oil.	10.5.2 10.4.5	
➤ Run the machine for about 10 minutes to coat all parts with a protective oil film.	–	
➤ Disconnect the battery, the negative terminal first and then the plus terminal, and store in a frost-free room.	–	
➤ Check the battery fluid level.	10.9	
➤ Check the battery charge monthly and recharge if necessary to prevent the battery fluid freezing.	–	
➤ Clean the battery terminals and coat with acid-resistant grease.	–	
➤ Close the compressed air outlet valves.	–	
➤ Use plastic sheeting and moisture-resistant adhesive tape to seal off the following openings: ■ Engine air inlet ■ Compressor air inlet ■ Exhaust silencer	–	
➤ Clean the bodywork and treat with preservative.	–	
➤ Hang a notice on the instrument panel to inform of the decommissioning measures taken.	–	

Tab. 94 Long-term decommissioning and storage checklist

PRELIMINARY Subject to Revision

➤ Attach the following notice on the instrument panel to inform of the decommissioning measures taken.

Attention!
1. The machine is decommissioned.
2. It is filled with preserving oil.
3. For recommissioning:
■ Take measures for recommissioning the compressor after a long period of storage.
■ Recommission according to service manual.
Date / signature

Tab. 95 Text for the long-term decommissioned and storage information notice

➤ Store in a dry place with constant temperatures.

12.2 Transport

Precondition Machine switched off and locked off.
The machine is fully vented, the pressure gauge reads 0 psig!
The machine has cooled down.
All compressed air consumers are disconnected.
All connecting lines and hoses disconnected and removed.
Any loose or movable parts that could fall off when transporting are removed or secured.

12.2.1 Safety

⚠ Allow transport only by personnel trained in safely dealing with motor vehicles and the transport of goods.

1. ⚠ WARNING *Risk of being run over or crushed by an overturning vehicle!*
   Death or serious injury can result from being crushed or run-over by a machine under tow.
   ➤ *Riding on the machine while it is transported is strictly forbidden.*
2. Make sure the danger area is clear of personnel.

12.2.2 Transporting the machine as trailer

➤ Note the instructions in the separate document "Chassis Operating Manual" regarding the topic "transport of the machine as trailer".

12.2.3 Transport with a crane

Additional precautions for conditions of snow and ice

Considerable snow or ice may build up on the machine under low temperature conditions.
This may adversely effect the machine's center of gravity.
It is possible that the permissible load on the crane or lifting eye is exceeded.

PRELIMINARY Subject to Revision

➤ Perform the following tasks in snow and ice conditions:
- Remove any snow and ice from the machine before lifting by a crane.
- Make sure the lifting eye cover plate is freely accessible and can be opened.

Perform the following tasks prior to moving the machine by crane

A lifting eye is provided for transporting with a crane. The lifting eye is located beneath a lift-up cover in the center of the canopy.

1. **⚠ CAUTION** *The machine can be damaged by jerky lifting!*
   ➤ *Lift the machine carefully.*
2. Unlock the cover from inside and lift up.
3. Position the crane hook vertically over the lifting eye.
4. Hang the crane hook from the inside.
5. Close and lock the access doors.
6. Lift and transport carefully.

Take care when setting down the machine

1. **NOTICE** *Incorrect setting down can damage the machine.*
   Machine components, particularly the chassis, can be damaged by incorrectly setting down.
   ➤ *Set the machine down carefully.*
   ➤ *Do not set down unevenly.*
2. Set the machine down slowly and carefully.

12.2.4 Option rw Transport with a forklift truck

Precondition The machine is shut down.
All connecting lines and hoses disconnected and removed.

⚠ CAUTION
Damage to the machine by incorrect lifting with a fork truck.
The machine may fall or be damaged by the forks.
➤ *Do not use a fork truck to lift towable machines.*
➤ *Only stationary machines with skids (option rw) may be transported with a fork truck.*
➤ *Do not use a fork lift on stationary machines with base frame (option rx).*
➤ *Pick up the machine only from the side with the forks through the lifting lugs.*

PRELIMINARY Subject to Revision

Option rw

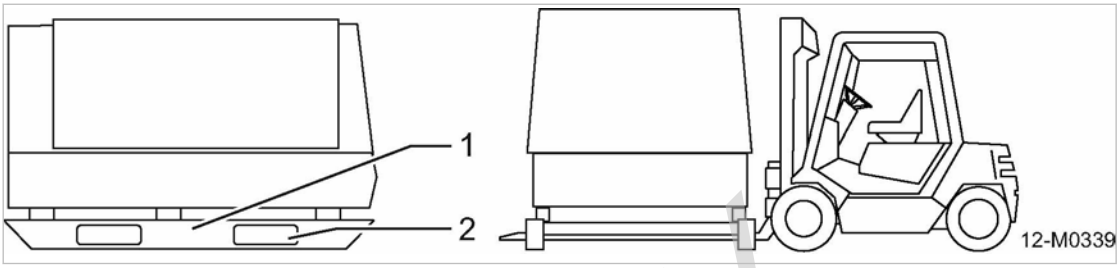

Fig. 73 Transporting using a forklift truck

1 Skids
2 Lifting lugs

1. Close and lock the access doors or canopy.
2. Position the fork truck to the side of the machine with the forks lined up with the lifting lugs.
3. Drive the forks fully through the lifting lugs as far as possible.
   The forks are fully under the machine.
4. Lift the machine carefully.

12.2.5 Transporting the machine as load

The medium of transport determines the type of packing and securing.
Packing and securing methods must be such that, assuming proper handling, the goods arrive in perfect condition at the destination.

Additional measures must be taken for the transport of machines by sea or air. Please contact KAESER SERVICE for more information.

Material Chocks
Restraints or timber balks
Straps

Carry out a freight securing:

- National directives and regulations for securing loads should be followed.
- Load securing is taken to mean that by full braking or sudden turning the load will not slide, fall, roll or cause unnecessary noise. Generally accepted technical regulations should be observed (e.g., in Germany: the VDI Directive 2700 ff).
- Responsibility for properly secured loads falls on the driver, the vehicle keeper and the carrier.

Use chocks, restrainers or timber balks for securing the load.
If necessary, use straps across the chassis and the towbar.

PRELIMINARY Subject to Revision

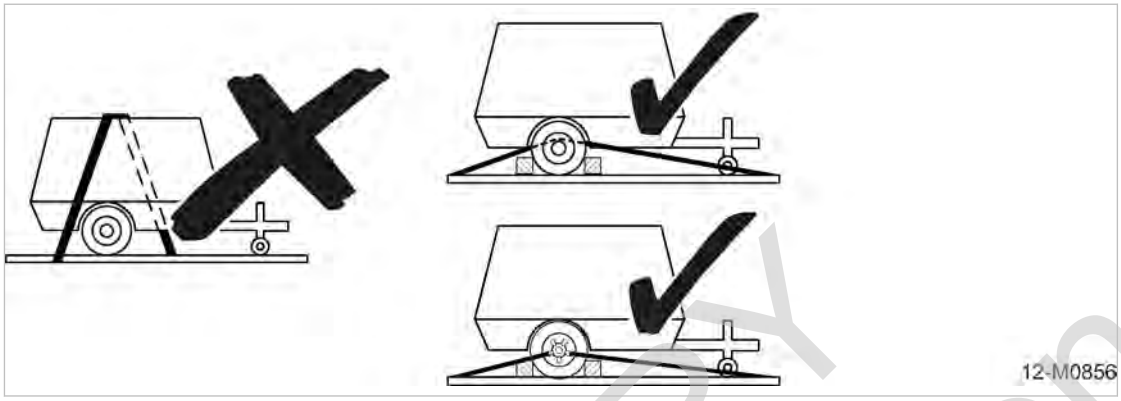

Fig. 74 Guys to secure the freight

1. **NOTICE** *Straps can damage the bodywork.*
   Movement during transportation can damage the bodywork.
   - ➤ *Do not use straps over the bodywork.*
   - ➤ *Use straps only over the chassis.*
2. Always observe valid accident and safety regulations when transporting.
3. The loads must be secured against rolling, tipping, slipping and falling.

Contact KAESER SERVICE with any questions regarding transporting or load securing.

KAESER accepts no liability and provides no guarantee for damage arising from incorrect transport or insufficient or incorrect load securing provisions.

For hire, rental and trade fair plant, any transport safety devices used for the delivery must also be used for the return transport.

Before shipment as air freight

The machine is designated as dangerous goods for air freight purposes; any disregard can result in a heavy fine.

1. **⚠ WARNING** *Danger of fire or explosion from operating fluids/materials.*
   The machine incorporates an internal combustion engine.
   - ➤ *Any dangerous fluids/materials contained within the machine must be removed before transport.*
2. Remove all dangerous fluids/materials.
   These include:
   - Residues of fuel or fuel vapours
   - Lubricants in engine and compressor.
   - Battery electrolyte

12.3 Storage

Moisture can lead to corrosion, particularly in the engine, airend and oil separator tank.

Frozen moisture can damage components, valve diaphragms and gaskets.

The following measures also apply to machines not yet commissioned.

Please consult with KAESER if you have questions to the appropriate storage and commissioning.

PRELIMINARY Subject to Revision

NOTICE

Moisture and frost can damage the machine!

- *Prevent ingress of moisture and formation of condensation.*
- *Maintain a storage temperature of >32 °F.*

- Store the machine in a dry place, free from frost if possible.

12.4 Disposal

When disposing of a machine, drain out all liquids and remove old filters.

Precondition The machine is decommissioned.

1. Completely drain the fuel from the machine.
2. Completely drain the cooling oil and engine oil from the machine.
3. Remove used filters and the oil separator cartridge.
4. Drain the coolant from water-cooled engines and systems.
5. The battery has been removed.
6. Hand the machine over to an authorized disposal expert.

- Operating materials and components contaminated with fuel, cooling oil or engine oil must be disposed of in accordance with local environmental protection regulations.
- Old batteries are hazardous waste and must be disposed of correctly in accordance with local environmental protection regulations

PRELIMINARY
Subject to Revision

13 Annex

13.1 Marking

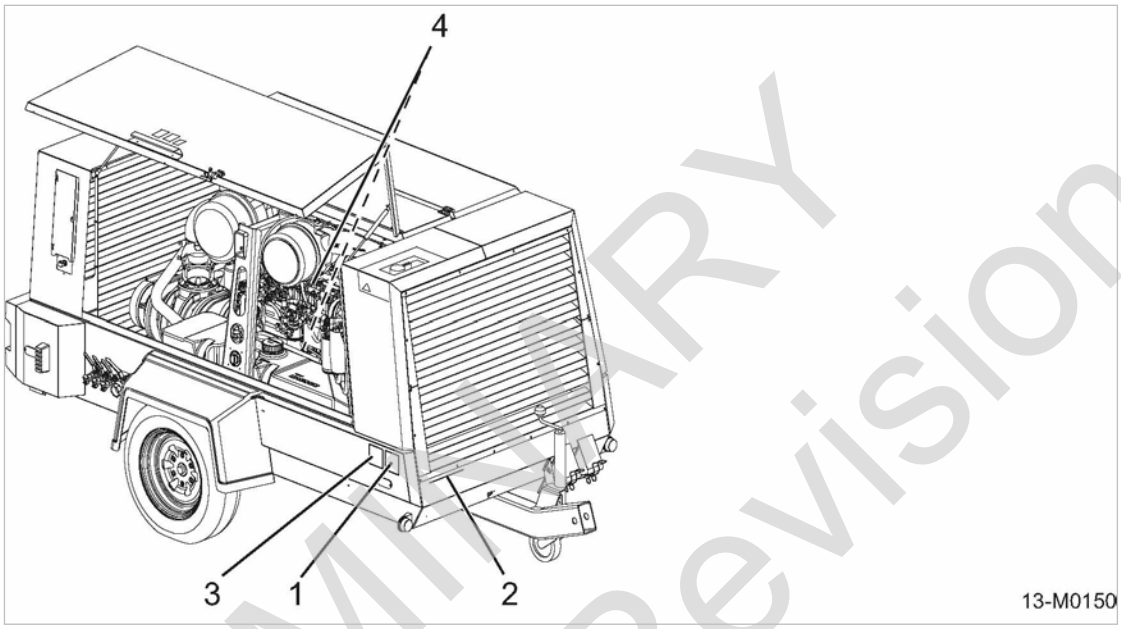

Fig. 75 Marking

1. Machine nameplate with system serial number
2. VIN *) (stamped in the bodywork)
   *Vehicle identity number
3. Options label
4. Engine nameplate with engine serial number
   (on the cylinder head cover or crankcase).

13.2 Pipeline and instrument flow diagram (P+I diagram)

PRELIMINARY
Subject to Revision

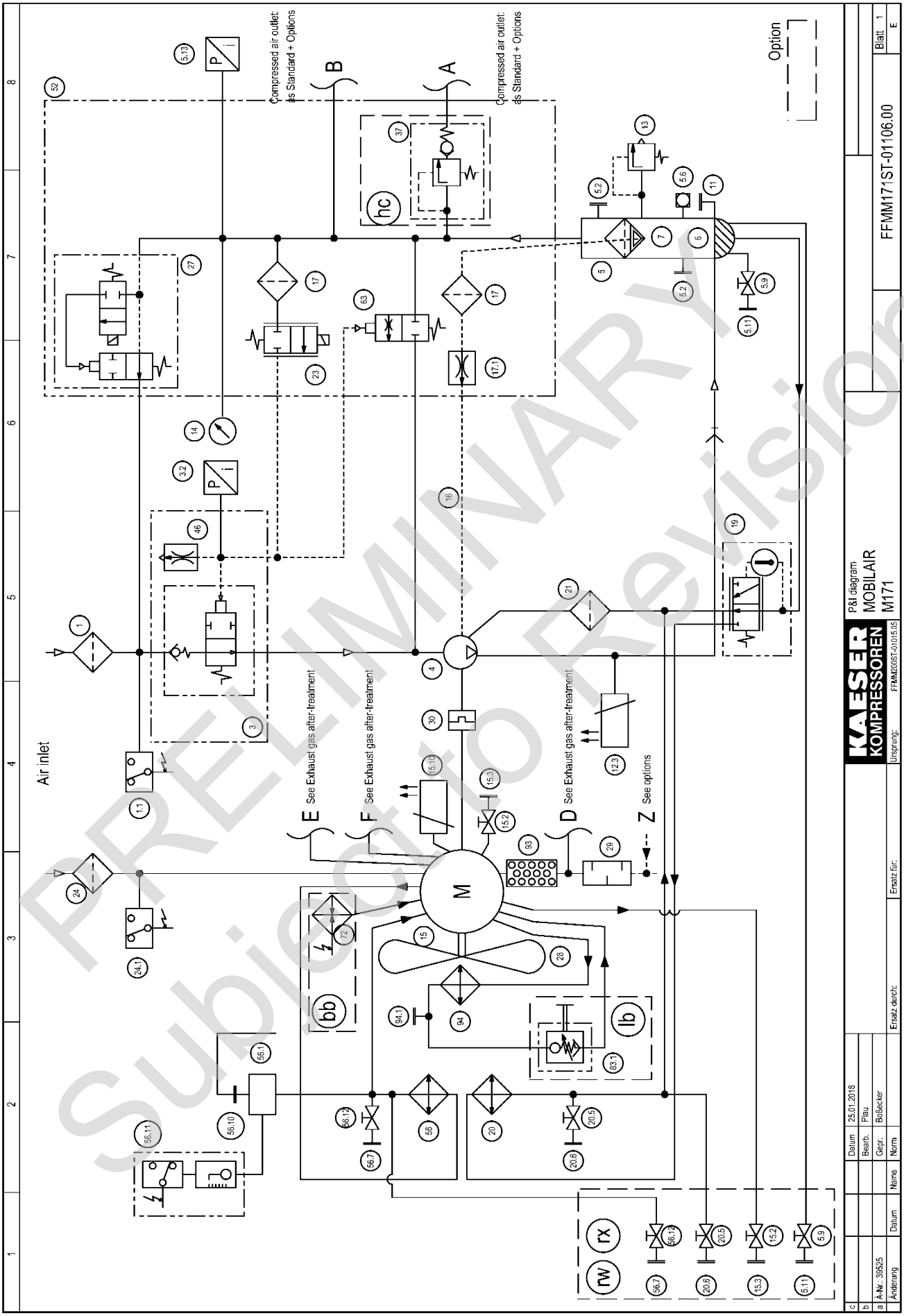

PRELIMINARY
Subject to Revision

13 Annex

13.2 Pipeline and instrument flow diagram (P+I diagram)

1	Compressor - Air filter
1.1	Vacuum switch
3	Inlet valve
3.2	Pressure transducer - Control pressure
4	Rotary screw airend
5	Oil separator tank
5.2	Screw plug
5.8	Shut-off valve with hose coupling - Oil drain device
5.9	Shut-off valve - Oil drain device
5.11	Screw plug- Oil drain device
5.13	Pressure transducer - Internal pressure
6	Oil reserve
7	Oil separator cartridge
11	Oil filler port with plug
12.3	Sensor - Airend discharge temperature
13	Safety relief valve
14	Pressure gauge Compressed air - Control panel
15	Diesel engine
15.2	Shut-off valve - Oil drain device
15.3	Screw plug- Oil drain device
15.10	Sensor - Outside temperature
16	Oil return line
17	Dirt trap
17.1	Nozzle
19	Thermostatic valve
20	Oil cooler
20.5	Shut-off valve- Oil drain device
20.6	Screw plug- Oil drain device
21	Oil filter
23	Electric proportional controller
24	Motor - Air filter
24.1	Vacuum switch
27	Venting valve
28	Fan
29	Exhaust gas after-treatment with SCR catalytic converter
30	Coupling
46	Nozzle (Secondary end Proportional controller)
52	Control valve
56	Water cooler
56.1	Cooling water expansion tank
56.5	Cooling water sight glass
56.7	Screw plug - Water drain device
56.10	Water filling port with plug and pressure relief valve
56.11	Cooling water status indicator (switching)
56.12	Shut-off valve - Water drain device
63	Regulating valve (Directional control valve)
72	Fail-safe heat exchangers
83.1	Engine air intake shut-off valve (automatic and manual shut-off)
93	Diesel particulate filter
94	Intercooler
94.1	Screw plug

PRELIMINARY
Subject to Revision

c				Datum	25.01.2018		KAESER KOMPRESSOREN	P&I diagram legend MOBILAIR M171	
b				Bearb.	Plau				
a				Gepr.	Boßecker				FFMM171ST-01106.00 Blatt 2
	Änderung	Datum	Name	Norm		Ersatz durch:	Ersatz für:	Ursprung: FFMM200ST-01015.05	E

A	Compressed air outlet:as Standard + Options
B	Venting line:as Standard + Options
D	Reducing agent injection; See Exhaust gas after-treatment
E	Cooling water inlet; See Exhaust gas after-treatment
F	Cooling water outlet; See Exhaust gas after-treatment
Z	See options (Option da)

Option

bb	Coolant pre-heating
da	After-cooler + Centrifugal separator
hc	Minimum pressure check valve(without combination filter)
lb	Engine air intake shut-off valve (automatic and manual shut-off)
oe	Closed floor pan
rw	Stationary, on skids
rx	Stationary, on frame

PRELIMINARY
Subject to Revision

c				Datum	25.01.2018		KAESER KOMPRESSOREN	P&I diagram legend	
b				Bearb.	Plau			MOBILAIR	
a				Gepr.	Boßecker			M171	
	Änderung	Datum	Name	Norm		Ersatz durch:	Ersatz für:	Ursprung: FFMM200ST-01015.05	FFMM171ST-01106.00	Blatt 3 E

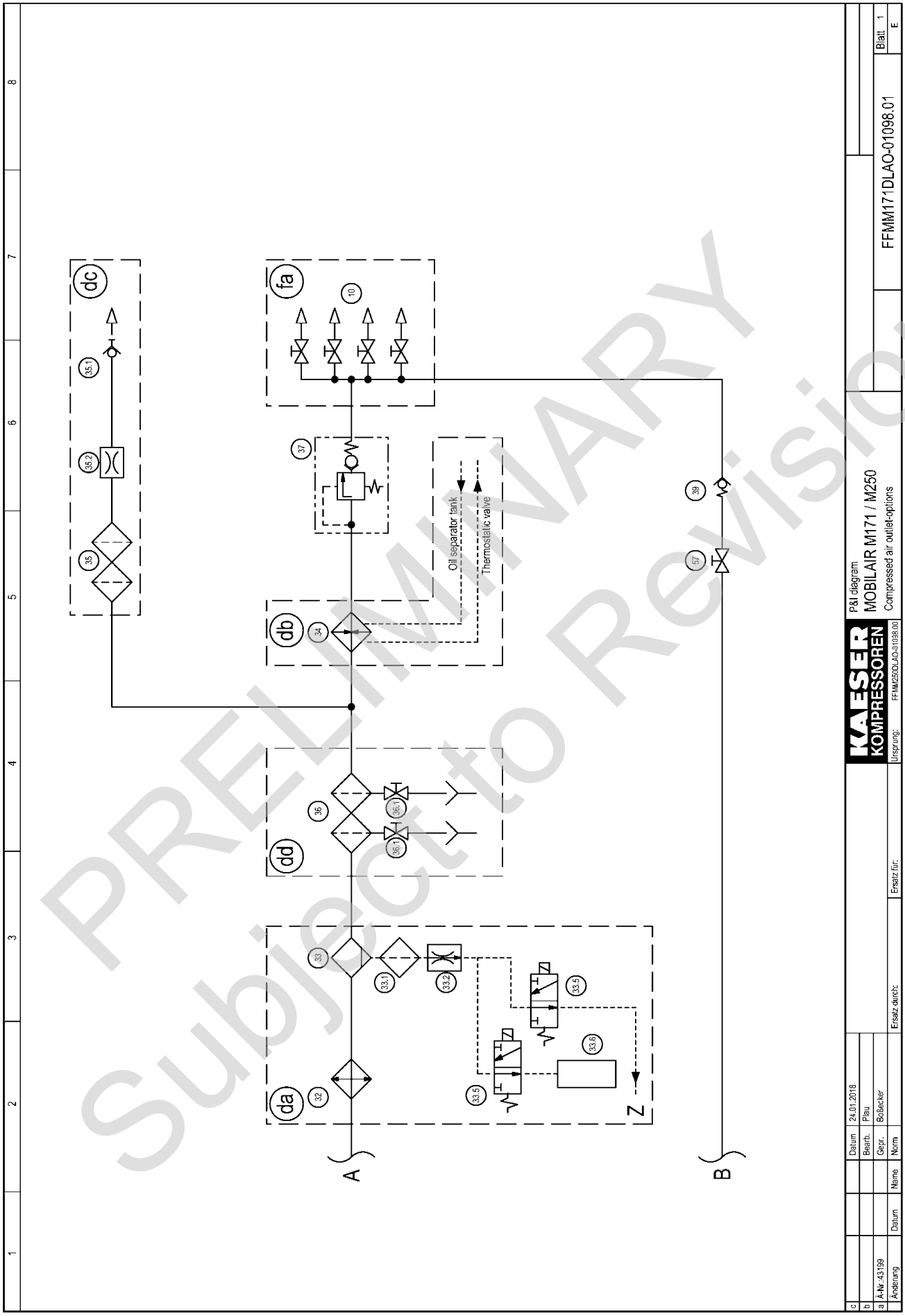

PRELIMINARY
Subject to Revision

10	Air distributor
32	Compressed air cooler
33	Centrifugal separator
33.1	Dirt trap
33.2	Nozzle
33.5	Solenoid valve
33.6	Condensate collection tank
34	Heat exchanger
35	Fresh air filter
35.1	Hose coupling
35.2	Nozzle
36	Filter combination
36.1	Condensate drain shut-off valve
37	Minimum pressure check valve
39	Check valve
57	Shut-off valve - Venting line

Option

da	After-cooler + Centrifugal separator
db	Heat exchanger
dc	Fresh air filter
dd	Filter combination
fa	Direct air flow

PRELIMINARY
Subject to Revision

c				Datum	25.04.2017		KAESER KOMPRESSOREN	P&I diagram legend	
b				Bearb.	Plau			MOBILAIR M171 / M250	
a				Gepr.	Hummel			Compressed air outlet-options	
	Änderung	Datum	Name	Norm		Ersatz durch:	Ersatz für:	Ursprung: FFMM250DLAO-01098.00	FFMM171DLAO-01098.01	Blatt 2 E

13.3 Dimensional drawings

13.3.1 Option rb/rk/rm/rs Dimensional drawing – chassis

- Option rb - Chassis, EU type
- Option rk - Chassis with low axle load
- Option rm - Chassis with height adjustment
- Option rs - Chassis with overrun brake

PRELIMINARY
Subject to Revision

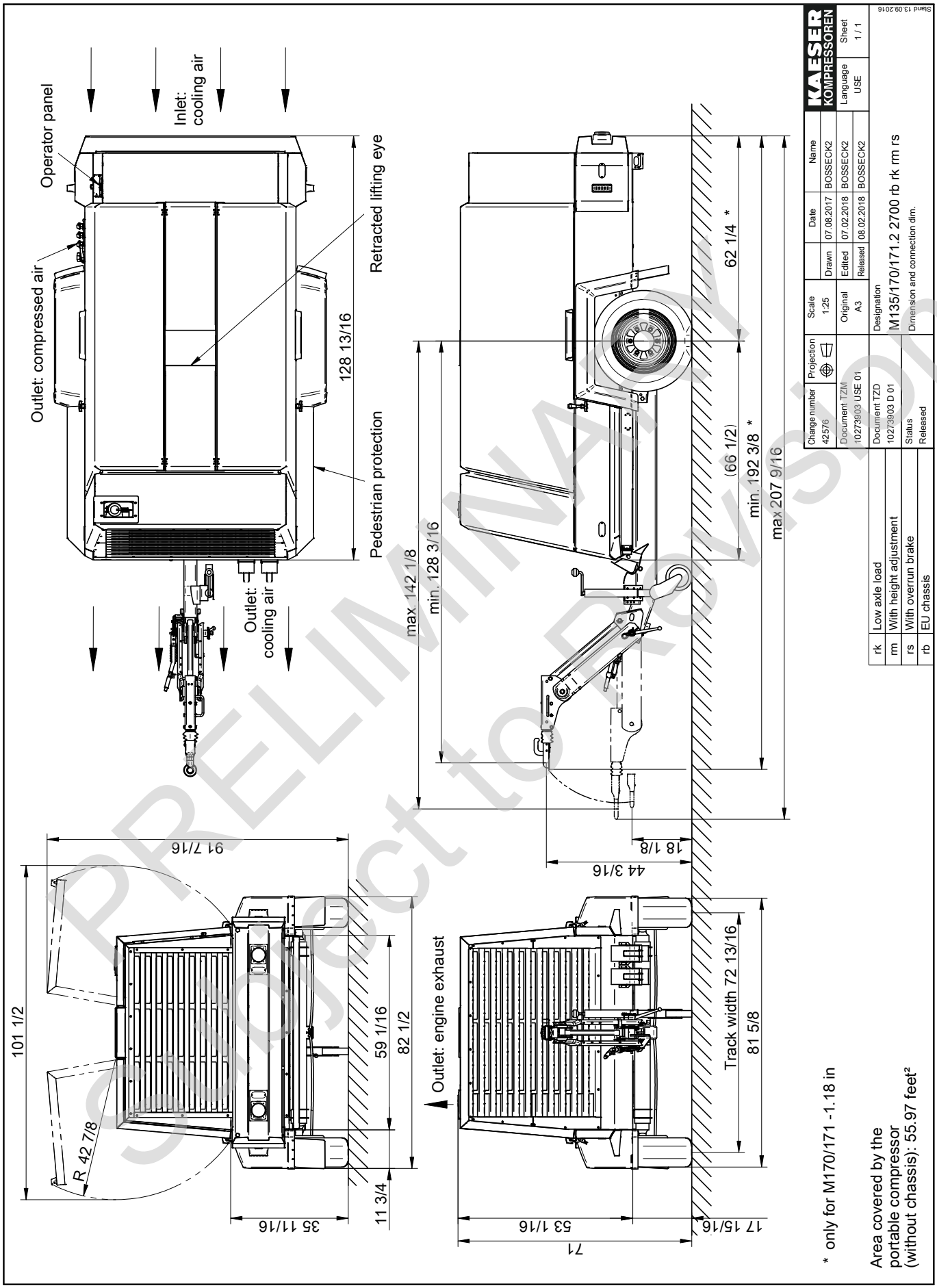

PRELIMINARY
Subject to Revision

13.3.2 Option rb/rl/rm/rs Dimensional drawing, chassis options

- Option rb - Chassis EU version
- Option rl - Chassis with higher axle load
- Option rm - Chassis with height-adjustable towbar
- Option rs - Chassis with overrun brake

PRELIMINARY
Subject to Revision

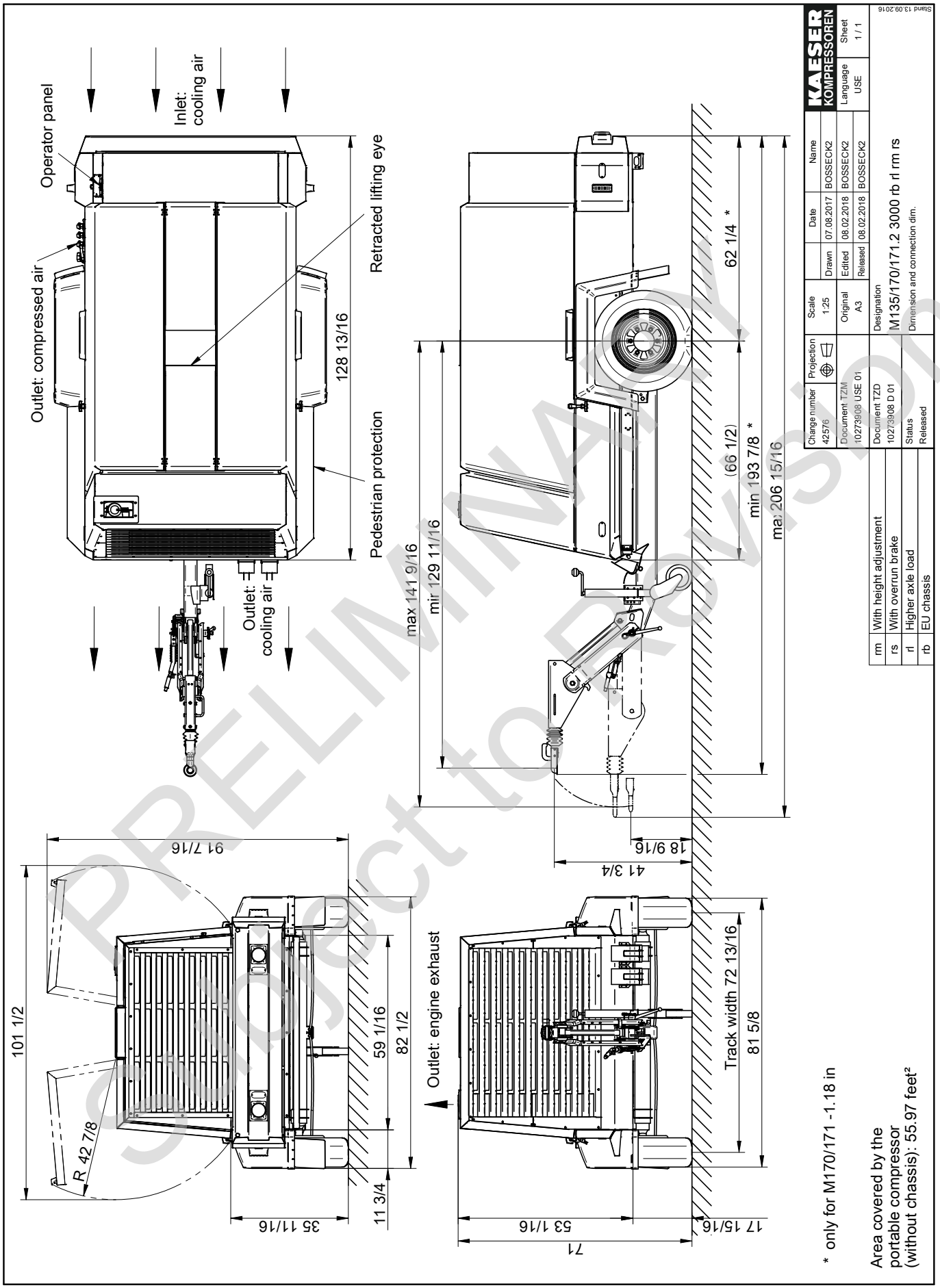
Operator panel
Inlet: cooling air
Outlet: compressed air
Retracted lifting eye
128 13/16
Pedestrian protection
Outlet: cooling air
max 141 9/16
min 129 11/16
62 1/4 *
(66 1/2)
min 193 7/8 *
max 206 15/16
18 9/16
41 3/4
91 7/16
101 1/2
R 42 7/8
59 1/16
82 1/2
11 3/4
35 11/16
Outlet: engine exhaust
Track width 72 13/16
81 5/8
53 1/16
71
17 15/16
KAESER KOMPRESSOREN
Change number 42576
Projection
Scale 1:25
Date
Name
Drawn 07.08.2017 BOSSECK2
Edited 08.02.2018 BOSSECK2
Released 08.02.2018 BOSSECK2
Original A3
Language USE
Sheet 1 / 1
Document TZM 10273908 USE 01
Document TZD 10273908 D 01
Status Released
Designation
M135/170/171.2 3000 rb rl rm rs
Dimension and connection dim.
Stand 13.09.2016
rm With height adjustment
rs With overrun brake
rl Higher axle load
rb EU chassis
* only for M170/171 -1.18 in
Area covered by the portable compressor (without chassis): 55.97 feet²
Drawings remain our exclusive property. They are entrusted only for the agreed upon purpose. Copies or any other reproduction, including storage, treatment and distribution by use of electronic systems is not allowed for any other than the agreed upon purpose. Neither originals nor reproductions may be given to or made available to third parties.
Subject to development-related changes. Drawing may be altered only via CAD.
PRELIMINARY
Subject to Revision

13.3.3 Option rc/ro/rs
Dimensional drawing, chassis options

- Option rc - Chassis GB version
- Option ro - Chassis with fixed height towbar
- Option rs - Chassis with overrun brake

PRELIMINARY
Subject to Revision

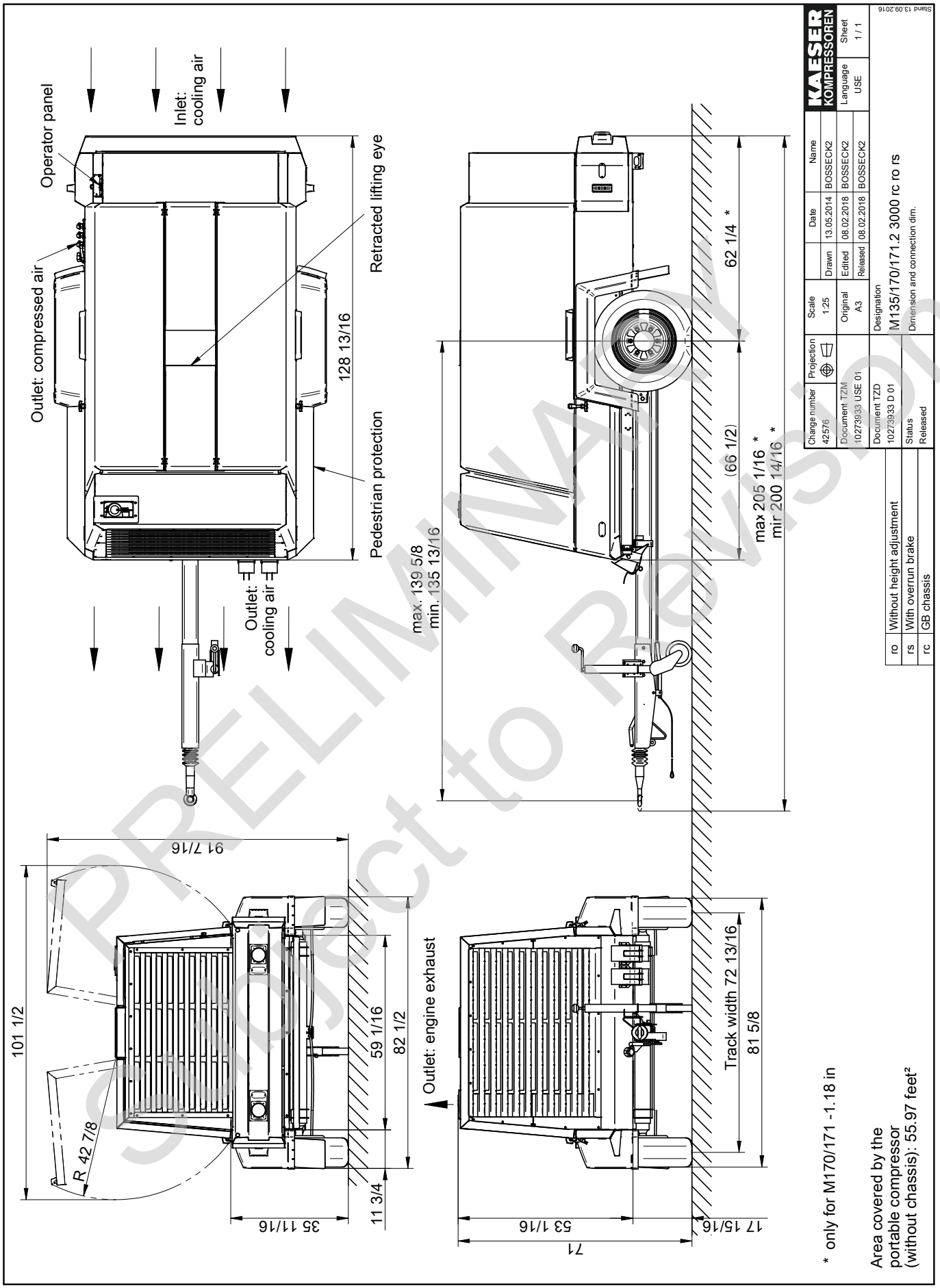

PRELIMINARY
Subject to Revision

13.3.4 Option rd/ro/rs
Dimensional drawing, chassis options

- Option rd - Chassis USA version
- Option ro - Chassis with fixed height towbar
- Option rs - Chassis with overrun brake

PRELIMINARY
Subject to Revision

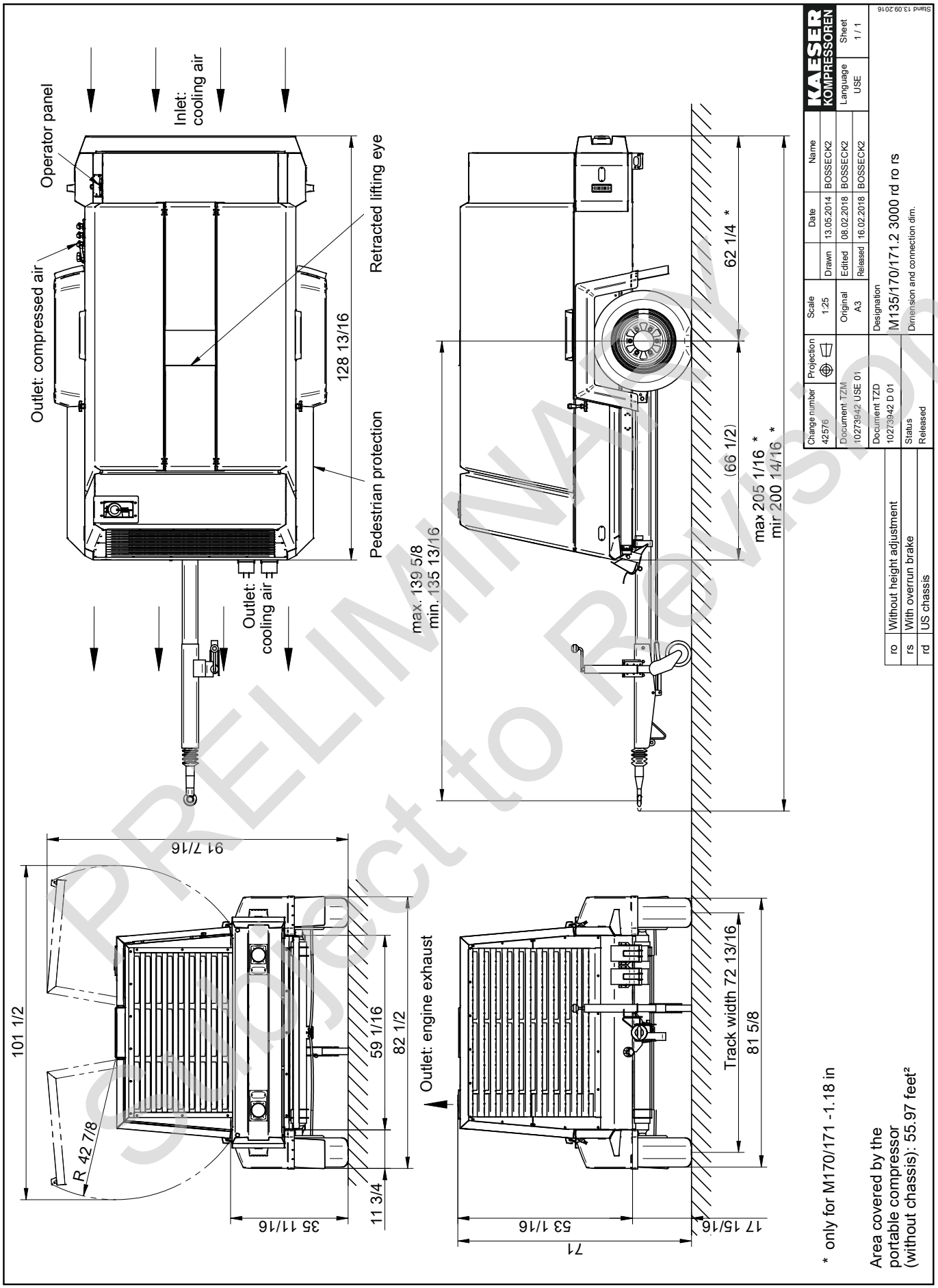

PRELIMINARY
Subject to Revision

13.3.5 Option rw
Dimensional drawing, stationary version

- Option rw - Skid frame on runners

PRELIMINARY
Subject to Revision

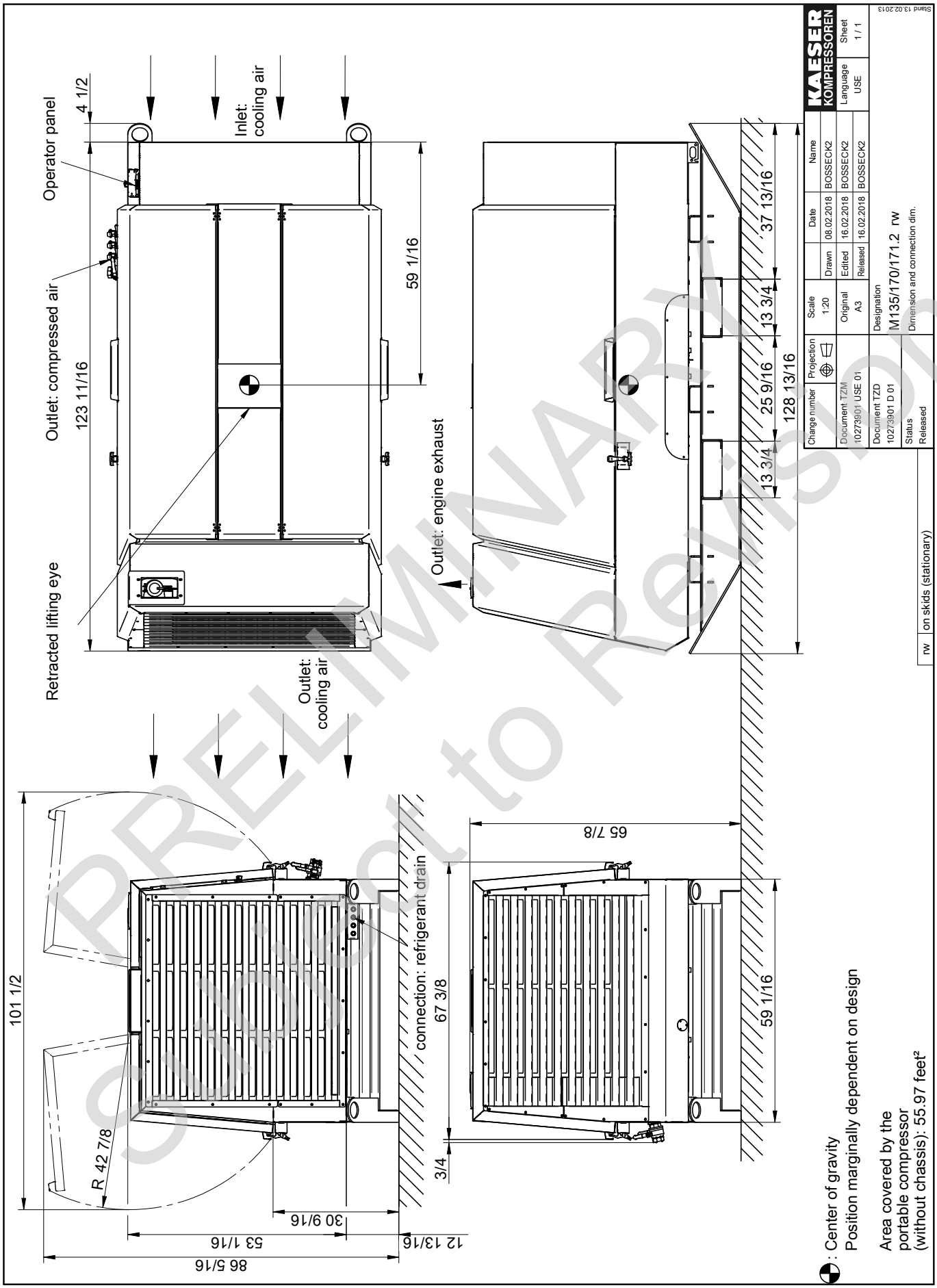

PRELIMINARY
Subject to Revision

Drawings remain our exclusive property.
They are entrusted only for the agreed upon purpose.
Copies or any other reproduction, including storage, treatment and distribution by use of electronic systems is not allowed for any other than the agreed upon purpose.
Neither originals nor reproductions may be given to or made available to third parties.
Subject to development-related changes.
Drawing may be altered only via CAD.

13.3.6 Option rx
Dimensional drawing, stationary version

- Option rx - On frame

PRELIMINARY
Subject to Revision

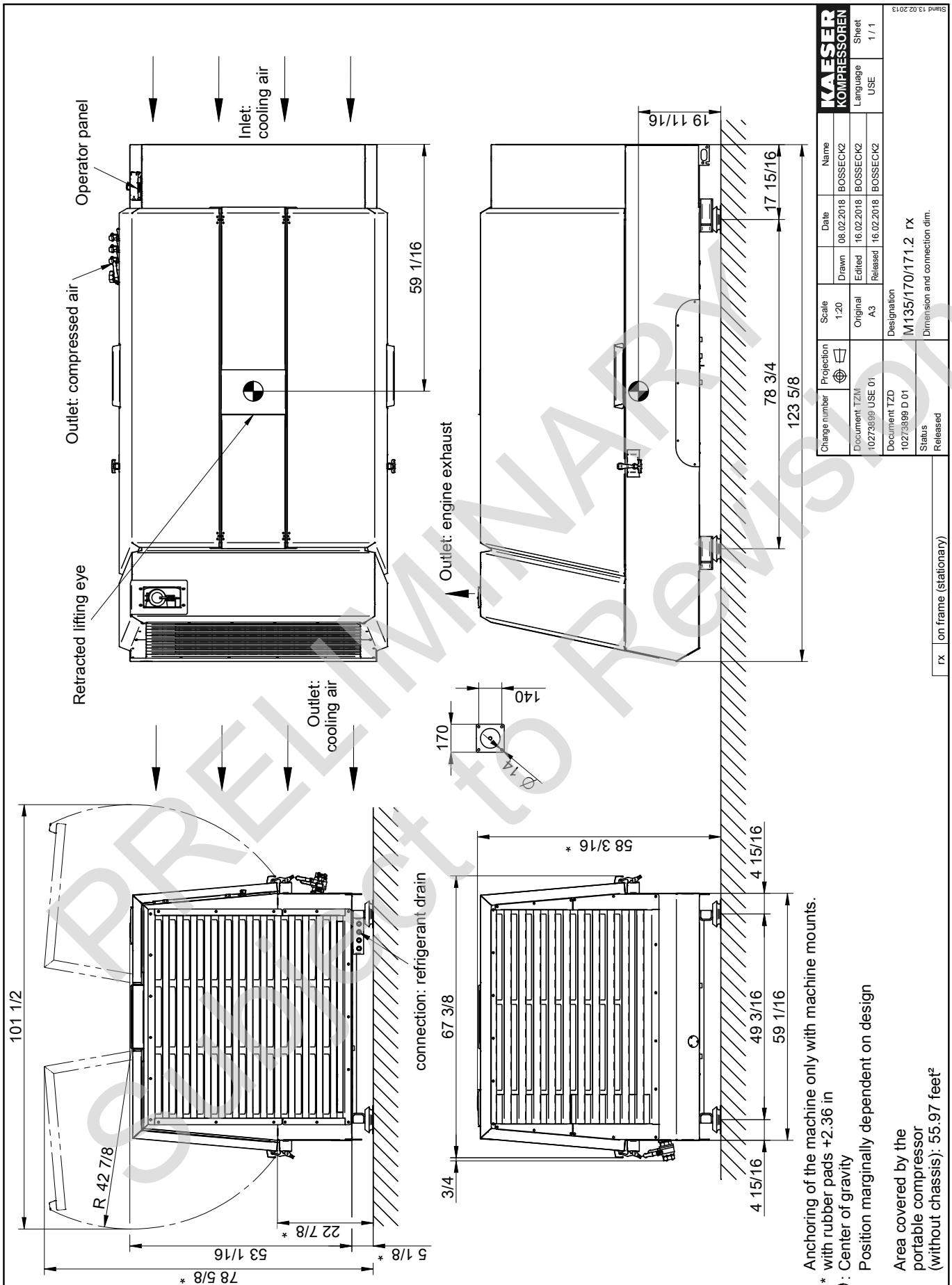

Drawings remain our exclusive property.
They are entrusted only for the agreed upon purpose.
Copies or any other reproduction, including storage, treatment and distribution by use of electronic systems is not allowed for any other than the agreed upon purpose.
Neither originals nor reproductions may be given to or made available to third parties.
Subject to development-related changes.
Drawing may be altered only via CAD.

13.4 Wiring diagrams

13.4.1 Electrical Diagram

PRELIMINARY
Subject to Revision

Electrical diagrams

MOBILAIR M125.3/M171.3

DEUTZ stage V Engine with EMR 4

SIGMA CONTROL MOBIL

Manufacturer: KAESER KOMPRESSOREN SE
Postfach 2143
96410 Coburg

PRELIMINARY
Subject to Revision

The drawings remain our exclusive property. They are entrusted only for the agreed purpose. Copies or any other reproductions, including storage, treatment and dissemination by use of electronic systems must not be made for any other than the agreed purpose. Neither originals nor reproductions must be forwarded or otherwise made accessible to third parties.

c				
b			Date	02.09.2019 E
a			Drawn	Sitter
A	Change	Date	Released	Fischer C.

KAESER KOMPRESSOREN

Cover page
MOBILAIR M125.3/M171.3

DFA125.2-03030.02

page 1
1 Sht.

Lfd. Nr. No.	Benennung Name		Zeichnungsnummer (Kunde) Drawing No. (customer)	Zeichnungsnummer (Hersteller) Drawing No. (manufacturer)	Blatt Page	Anlagenkennzeichen Unit designation
1	Cover page			DFA125.2-03030.02	1	
2	List of contents			ZFA125.2-03030.02	1	
3	general instructions			UFA125.2-03030.02	1	
4	electrical equipment identification			UFA125.2-03030.02	2	
5	Block diagram	cabling		UFA125.2-03030.02	3	
6	Block diagram	components Cable set Engine XA		UFA125.2-03030.02	4	
7	Block diagram	Cable set		UFA125.2-03030.02	5	
8	Circuit diagram	Cable set Battery		SFA125.2.BK-03030.02	1	=BK
9	Circuit diagram	Control panel		SFA125.2.BT-03030.02	1	=BT
10	Circuit diagram	switching on		SFA125.2.SK-03030.02	1	=SK
11	Circuit diagram	Control board EMR 4		SFA125.2.SK-03030.02	2	=SK
12	Circuit diagram	interface		SFA125.2.SK-03030.02	3	=SK
13	Circuit diagram	SCM sensors		SFA125.2.SK-03030.02	4	=SK
14	Circuit diagram	SCM inputs		SFA125.2.SK-03030.02	5	=SK
15	Circuit diagram	SCM inputs		SFA125.2.SK-03030.02	6	=SK
16	Circuit diagram	SCM outputs		SFA125.2.SK-03030.02	7	=SK
17	Circuit diagram	SCM outputs		SFA125.2.SK-03030.02	8	=SK
18	Circuit diagram	SCM outputs		SFA125.2.SK-03030.02	9	=SK
19	Circuit diagram	SCM outputs		SFA125.2.SK-03030.02	10	=SK
20	Circuit diagram	SCM outputs		SFA125.2.SK-03030.02	11	=SK
21	Circuit diagram	Cable set Engine		SFA125.2.SK-03030.02	12	=SK
22	Circuit diagram	Control board EMR 4		SFA125.2.SK-03030.02	13	=SK
23	Circuit diagram	Control board EMR 4		SFA125.2.SK-03030.02	14	=SK
24	Circuit diagram	Control board EMR 4		SFA125.2.SK-03030.02	15	=SK
25	Circuit diagram	Volt-free contacts		SFA125.2.SK-03030.02	16	=SK
26	Circuit diagram	Control board EMR 4		SFA125.2.SK-03030.02	17	=SK
27	Equipment parts list	Control cabinet		GFA125.2-03030.02	1	
28	Equipment parts list			GFA125.2-03030.02	2	
29	Terminal schedule	Terminal strip -X1		KFA125.2-03030.02	1	=SK
30	Terminal schedule	Terminal strip -X1		KFA125.2-03030.02	2	=SK
31	Terminal schedule	Plug connection -X24		KFA125.2-03030.02	10	
32	Terminal schedule	Plug connection -X25		KFA125.2-03030.02	11	
33	Terminal schedule	Plug connection -X31		KFA125.2-03030.02	20	=SK
34	Terminal schedule	Plug connection -X33		KFA125.2-03030.02	21	=SK
35	Terminal schedule	Plug connection -X35		KFA125.2-03030.02	22	=SK
36	Terminal schedule	Plug connection -X39.2		KFA125.2-03030.02	23	=SK
37	Terminal schedule	Plug connection -X45		KFA125.2-03030.02	24	=SK
38	Terminal schedule	Plug connection -XA.1		KFA125.2-03030.02	30	=SK
39	Terminal schedule	Plug connection -XA.2		KFA125.2-03030.02	31	=SK
40	Component layout	Switchboard		AFA125.2-03030.02	1	
41	Component layout	Switchboard		AFA125.2-03030.02	2	

c			Date	02.09.2019	
b			Drawn	Sitter	
a			Released	Fischer C.	
B	Change	Date	Name		

KAESER KOMPRESSOREN

List of contents
MOBILAIR M125.3/M171.3

ZFA125.2-03030.02

=
+

page 1
1 Sht.

PRELIMINARY
Subject to Revision

general instructions

Control voltage: 24VDC

control cabinet wiring for non-designated conductors:

All non-designated conductors 0,75mm² FLRY white
All control lines marked a) are 1,5 mm² FLRY white
All control lines marked b) are 2,5 mm² FLRY white

potentials:

15	switched plus + (unit ON)
19	Preheat with glowplug
30	+ terminal (Battery)
31	- terminal (Battery), earth
50	Starter-Control

wiring colors:

BU	= blue	OG	= orange
BN	= brown	PK	= pink
YE	= yellow	RD	= red
GN	= green	BK	= black
GNYE	= green-yellow	VT	= violet
GY	= grey	WH	= white

option ob = Automatic-start-stop

option oc = GSM/GPS Modem

PRELIMINARY
Subject to Revision

c				Date	02.09.2019
b				Drawn	Sitter
a				Released	Fischer C.
C	Change	Date	Name		

KAESER KOMPRESSOREN

general instructions
MOBILAIR M125.3/M171.3

UFA125.2-03030.02

page 1
5 Sht.

components Control cabinet

-K20	Control board SIGMA CONTROL MOBIL
-K22	Control board EMR 4
-F10,-F11,-F12,-F13,-F15, -F16,-F17,-F20,-F22, -F39,-F66,-F69,-F100	Fuse
-K39	Relay switching on
-K67	Relay buzzer
-K84...-K88	Relay Heating SCR
-R3,-R11,-R12,-R13	Resistor
-R1	LOAD-DUMP-Modul 24 VDC
-R2	Diode
-S100	Rotary control switch PLC / HMI
-X1	Terminal strip
-X24	Adaptor connector HMI
-X25	Adaptor connector EMERGENCY STOP
-X31,-X33	Adaptor connector Sensors/Actuators Compressor
-X22	diagnostics plug EMR 4
-X100	diagnostics plug KAESER
-XA	Adaptor connector SCM-Deutz-unit

components Drive motor

-G2	Alternator
-G1.1,-G1.2	Battery
-M2	Starter

components Control panel

-K21	Operating unit SIGMA CONTROL MOBIL
-P9	Display fuel level
-S1	EMERGENCY STOP
-S10	Control voltage ON/OFF switch

components unit

-B10	Pressure transducer system pressure
-B11	Pressure transducer Control pressure
-B40	sensor airend temperature
-K1	Control valve Inlet valve
-K7	Valve Venting
-X23	Power supply unit Deutz-Plug

model-dependent components:

-K61...-K66	Relay Volt-free contacts
-F9	Fuse
-K10.1,-K10.2	Solenoid valve Centrifugal separator
-X4	connection option generator
-X50,-X51	Adaptor connector
-K27	GSM/GPS Modem
-T27	GSM/GPS antenna
-X13	GSM/GPS Modem interface

PRELIMINARY
Subject to Revision

c				Date	02.09.2019
b				Drawn	Sitter
a				Released	Fischer C.
C	Change	Date	Name		

KAESER KOMPRESSOREN

electrical equipment identification
MOBILAIR M125.3/M171.3

UFA125.2-03030.02

page 2
5 Sht.

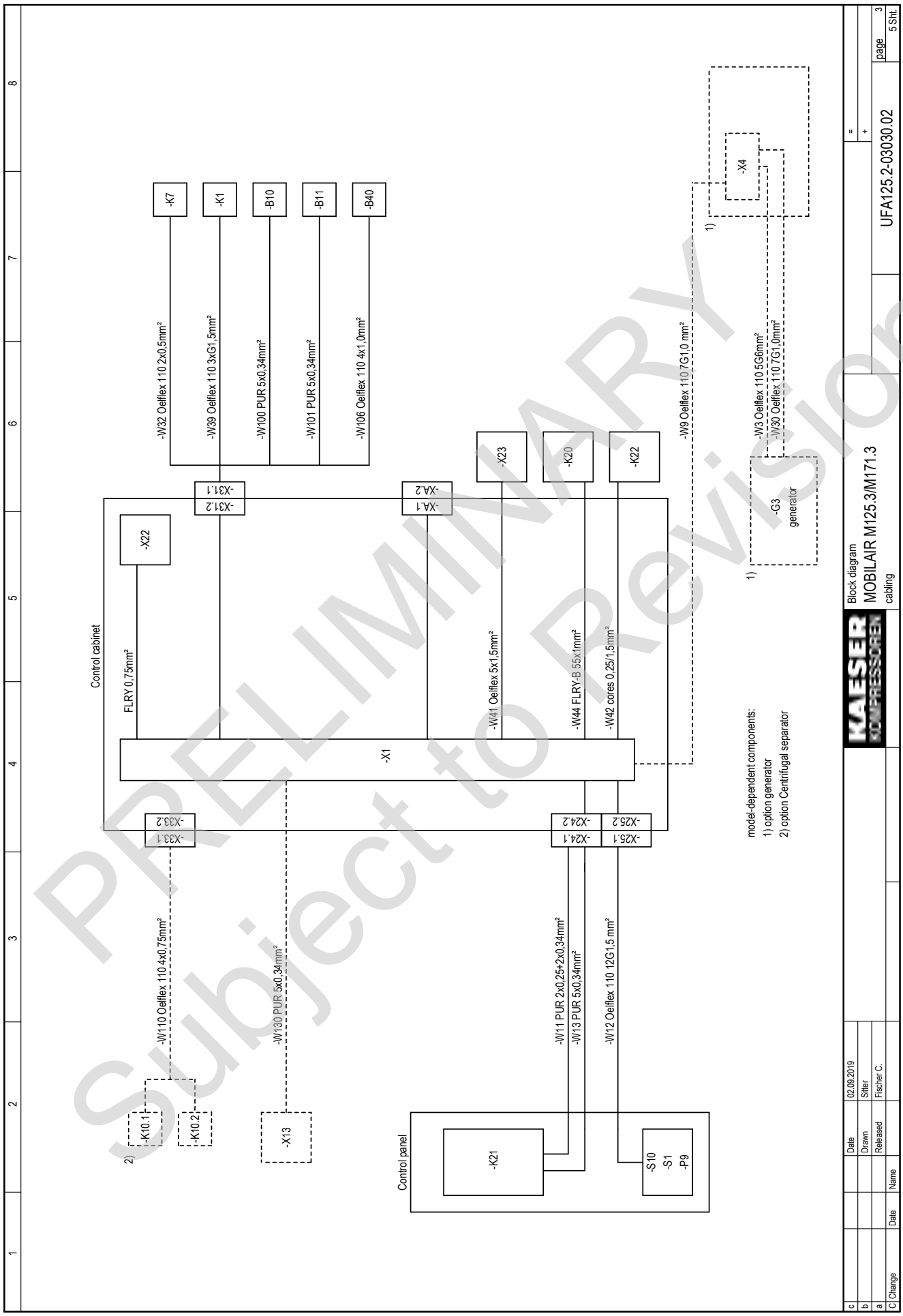

PRELIMINARY
Subject to Revision

components Cable set Engine XA

-B5,-B6	Pressure switch Filter monitoring
-B30	sensor coolant level
-P40	Hest/Signal horn
-B57	differential pressure DPF
-B59	Pressure sensor downstream of DPF
-B60	Temperature of exhaust gas upstream of oxidation catalyst
-B61	Temperature of exhaust gas downstream of oxidation catalyst
-B64	sensor Temperature SCR Kat
-B66	NOx sensor upstream of SCR catalyst
-B67	NOx sensor downstream of SCR catalyst
-B69	AdBlue Quality
-B80	sensor Ambient temperature
-E86...-E88	Heating SCR System
-K81	Dispensing valve SCR System
-X35	*plug connection 16-pole*
-B31	sensor Filter maintenance indication
-B37	sensor fuel level
-K83	Heating valve
-XK16	*plug connection 7-pole*
-B116	Speed sensor Fan coupling
-K16	bypass valve Fan 1
-X45	*plug connection 12-pole, Pump module Deutz*
-B58	Pressure downstream of pump
-E85	Heating SCR System
-K82	Exhaust valve SCR System
-M20	SCR Pump
-X39	*plug connection 39-pole, Deutz Transfer*

PRELIMINARY
Subject to Revision

c				Date	02.09.2019
b				Drawn	Sitter
a				Released	Fischer C.
C	Change	Date	Name		

KAESER KOMPRESSOREN

Block diagram
MOBILAIR M125.3/M171.3
components Cable set Engine XA

UFA125.2-03030.02

page 4
5 Sht.

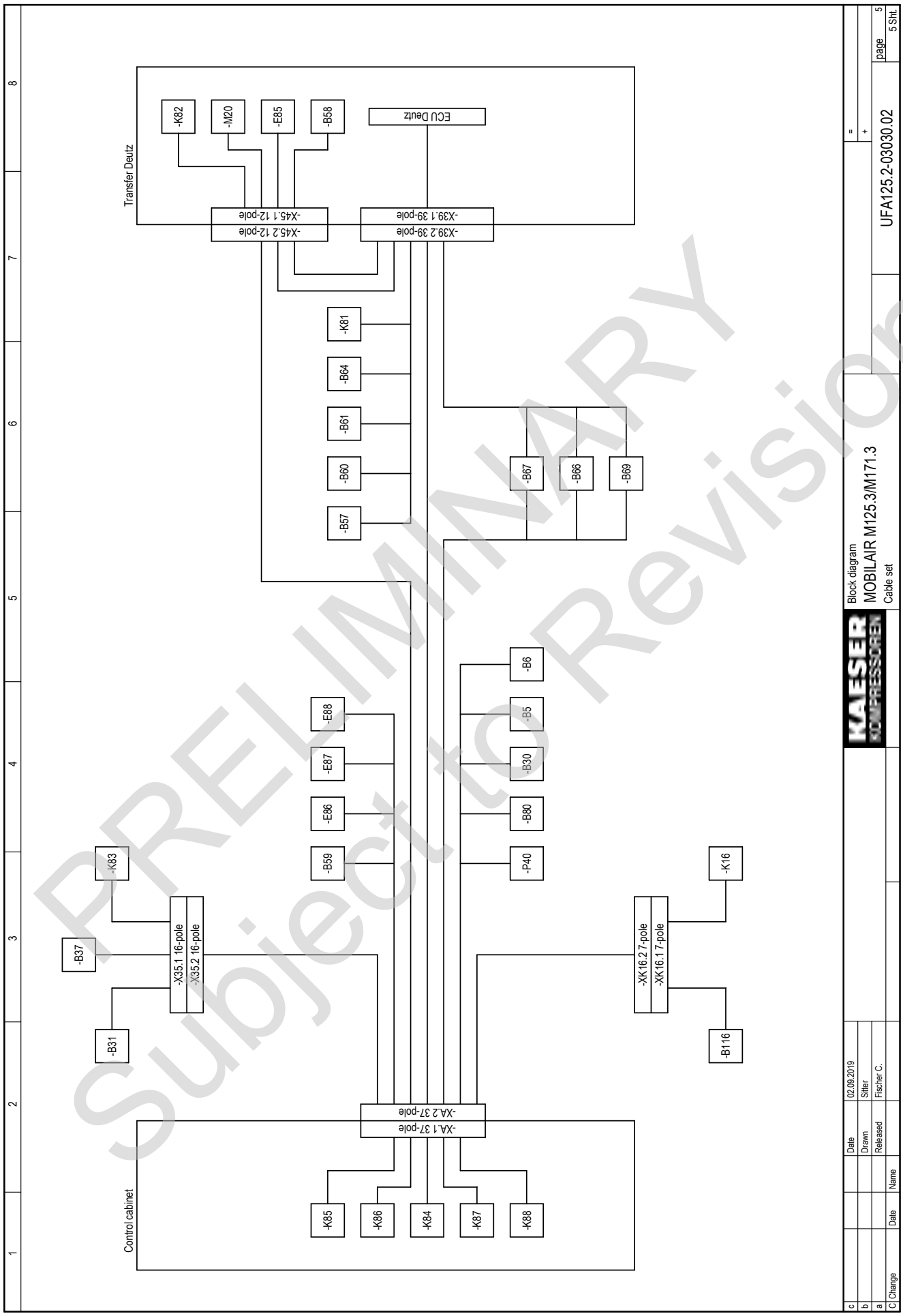

PRELIMINARY
Subject to Revision

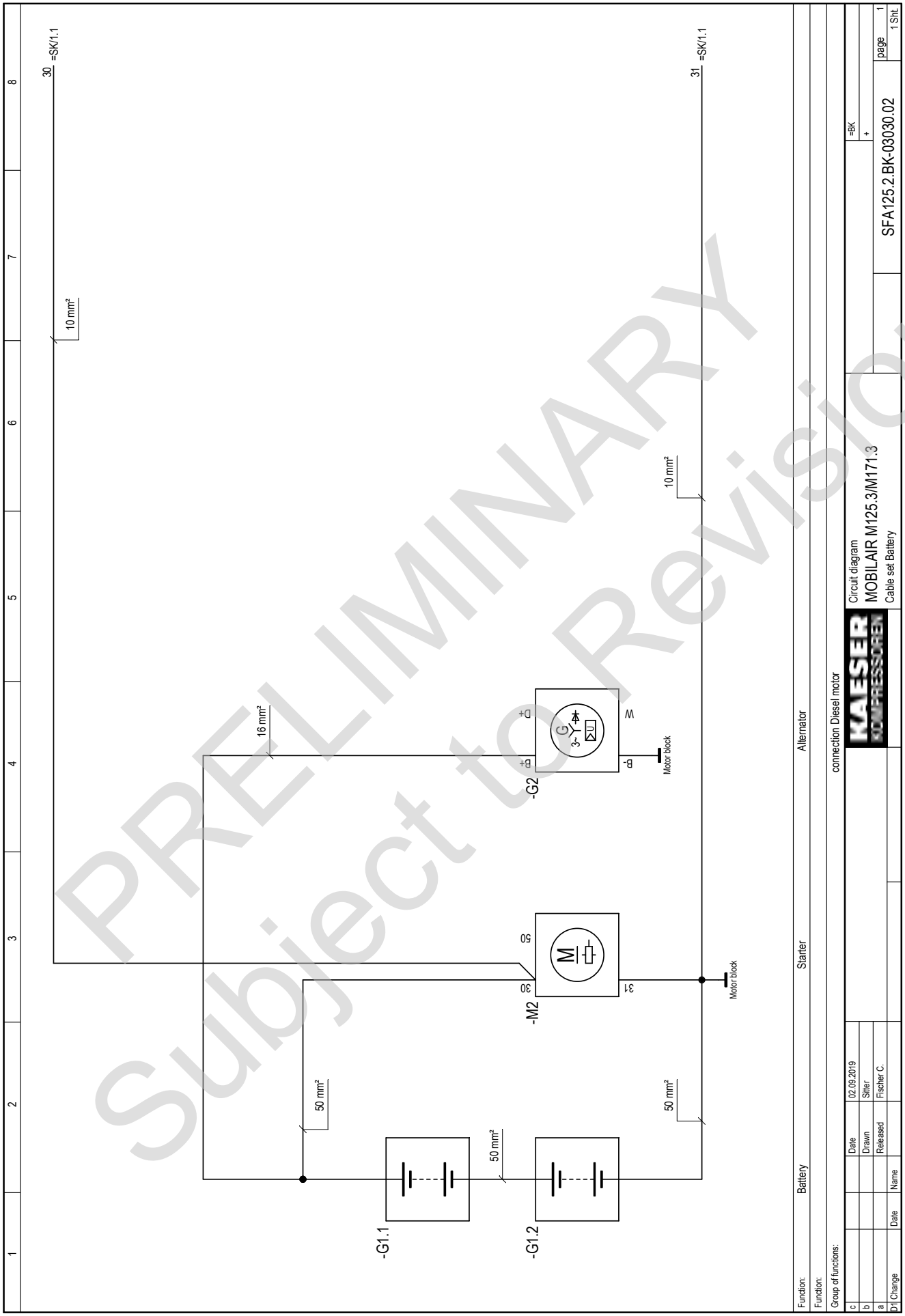

PRELIMINARY
Subject to Revision

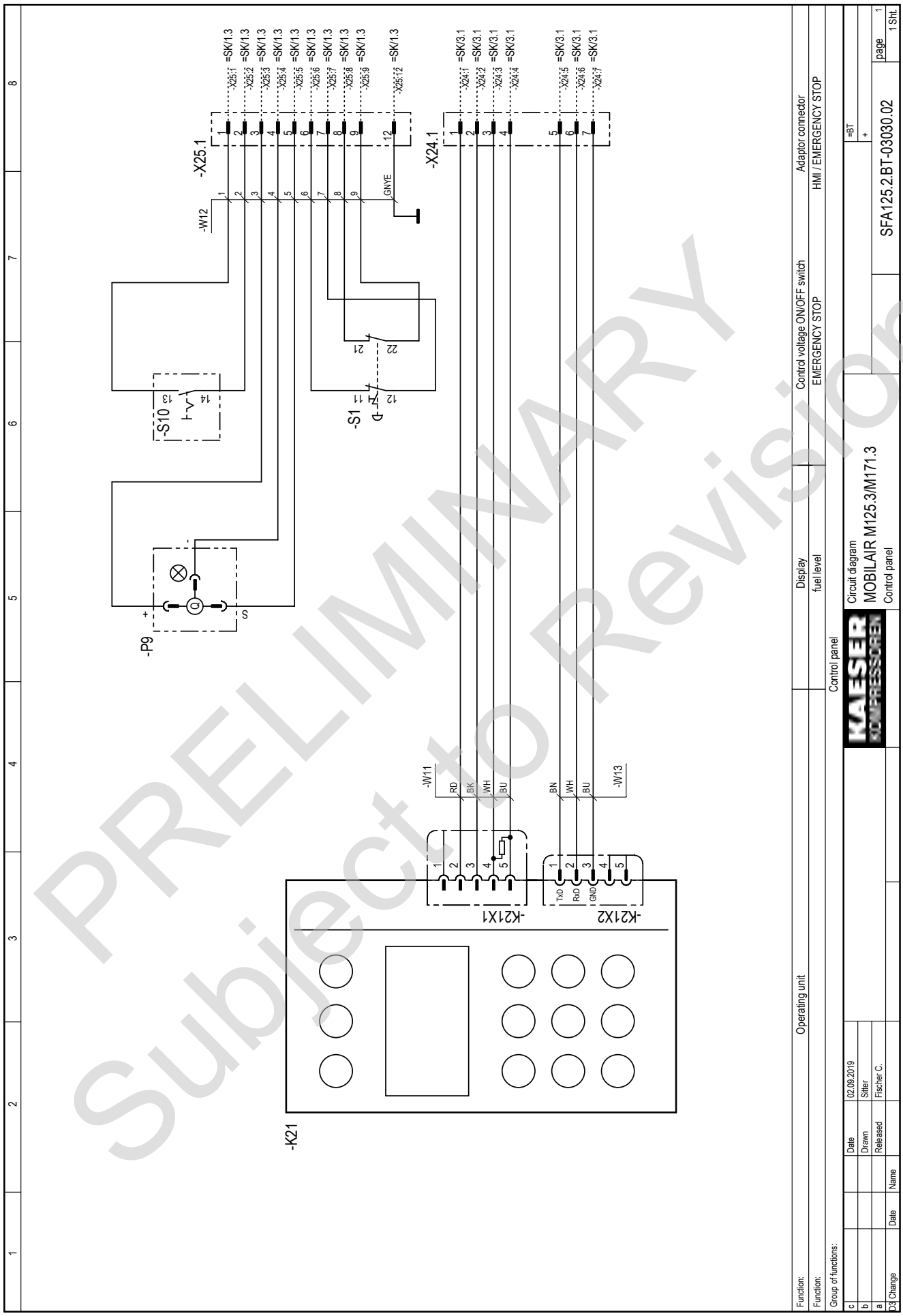

PRELIMINARY
Subject to Revision

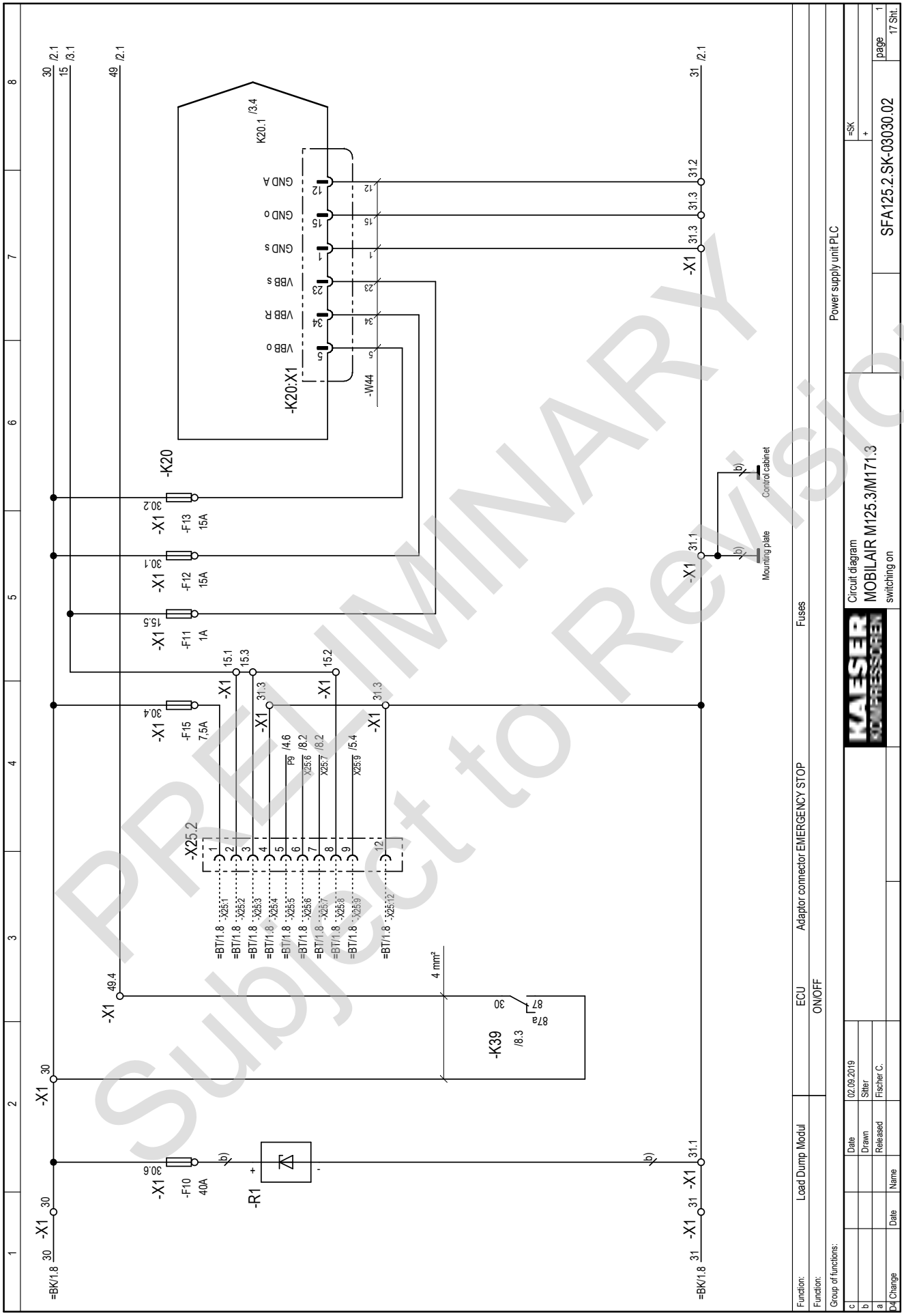

PRELIMINARY
Subject to Revision

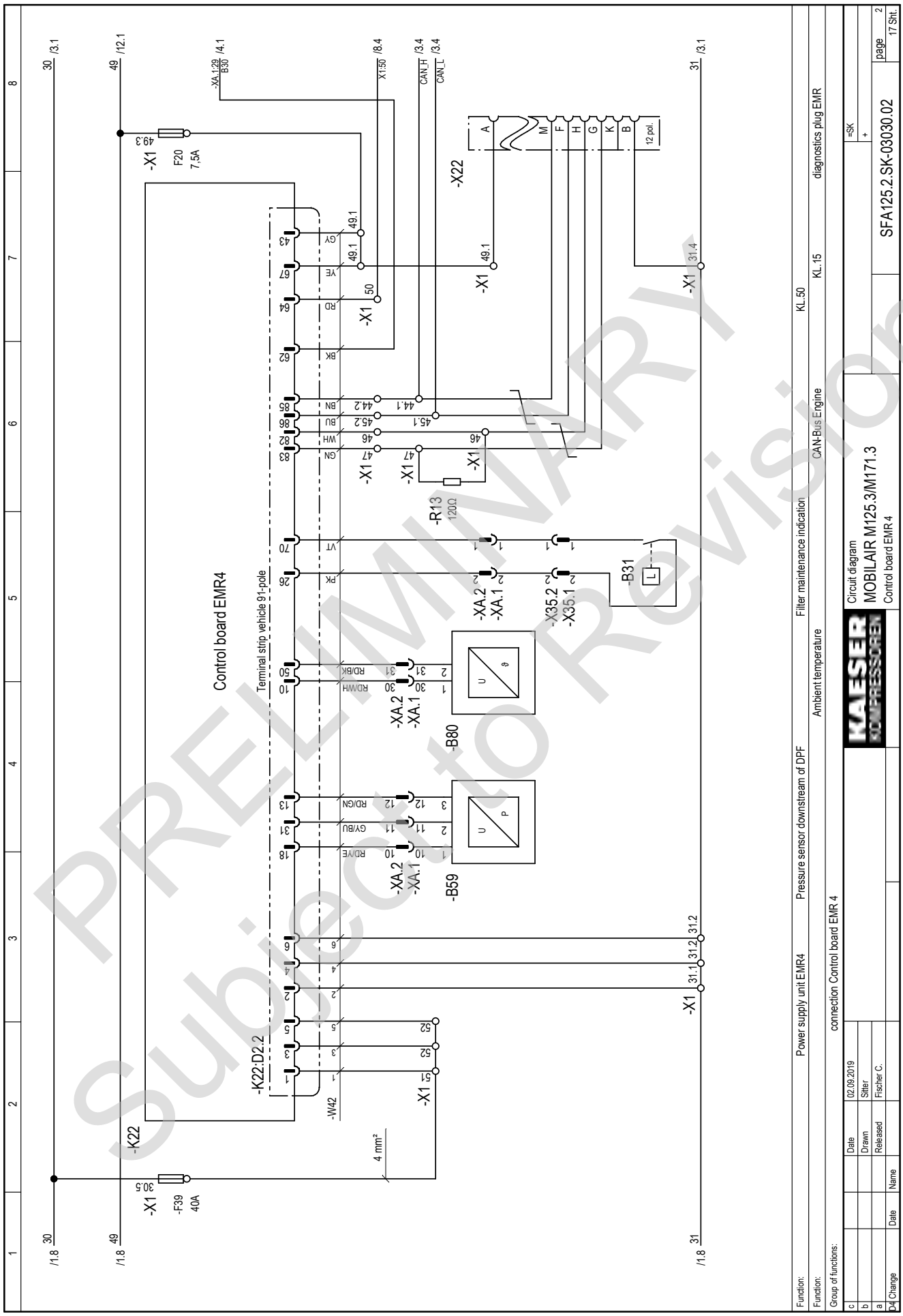
Control board EMR4
Terminal strip vehicle 91-pole
-K22:D2.2
-K22
-X1
-F39
40A
30.5
F20
7,5A
49.3
-W42
4 mm²
-B59
-B80
-B31
-R13
120Ω
-X22
12 pol.
-XA.1:29
B30
X1:50
CAN_H
CAN_L
Power supply unit EMR4
Pressure sensor downstream of DPF
Filter maintenance indication
Ambient temperature
CAN-Bus Engine
diagnostics plug EMR
KL.50
KL.15
connection Control board EMR 4
Function:
Group of functions:
Date
Drawn
Released
02.09.2019
Sitter
Fischer C.
Name
Circuit diagram
MOBILAIR M125.3/M171.3
Control board EMR 4
SFA125.2.SK-03030.02
page 2
17 Sht.
=SK
PRELIMINARY
Subject to Revision

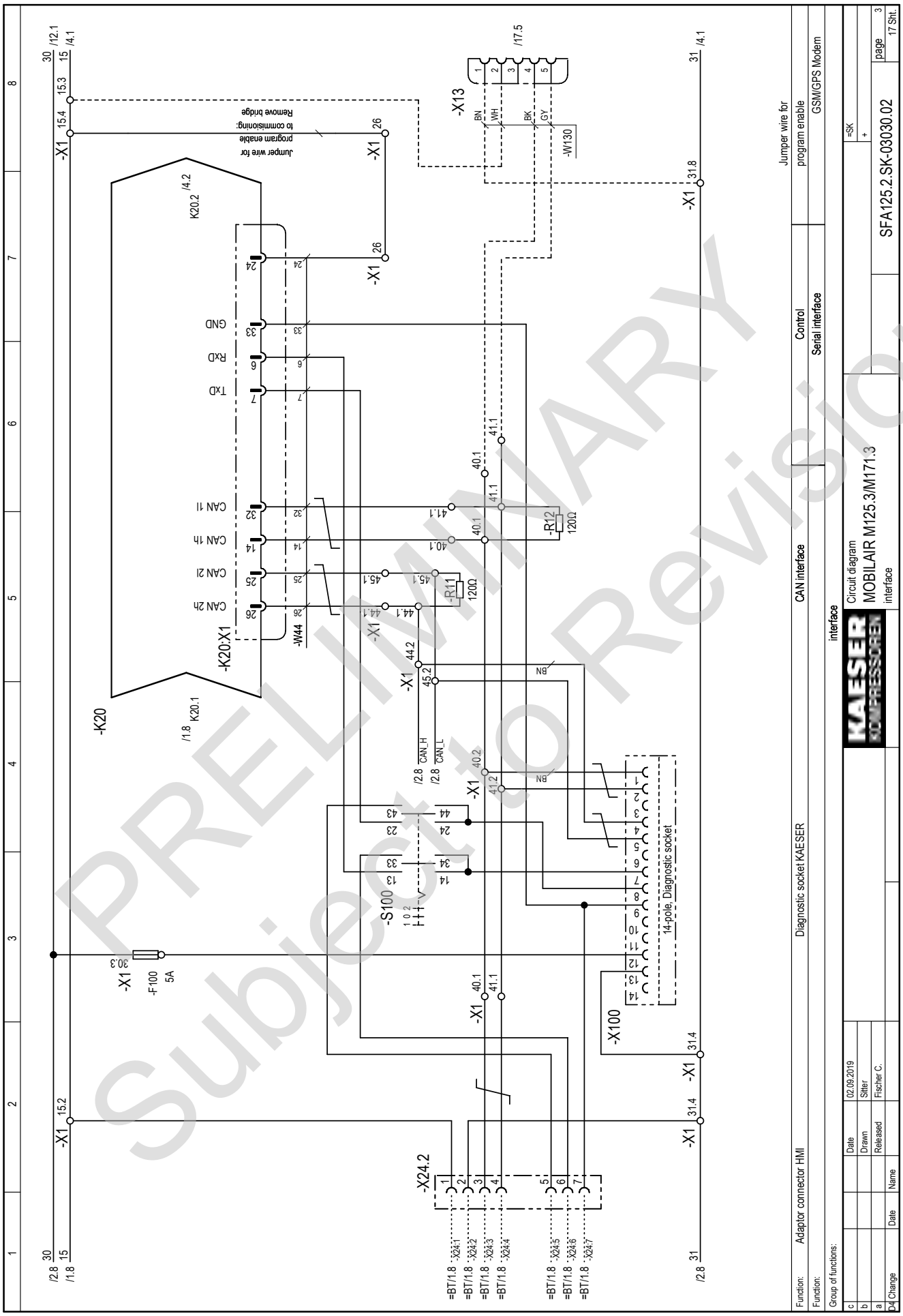

PRELIMINARY
Subject to Revision

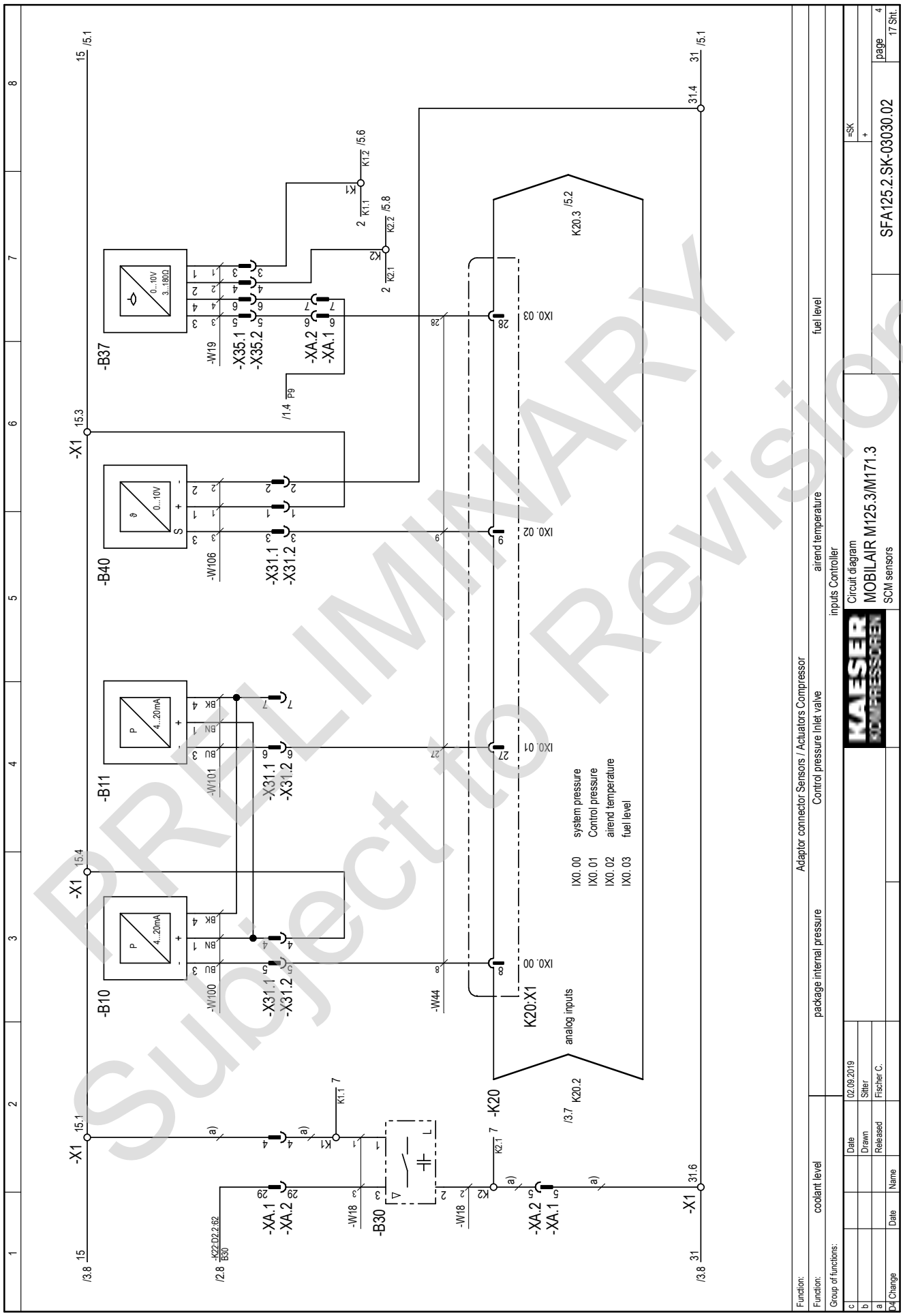

PRELIMINARY
Subject to Revision

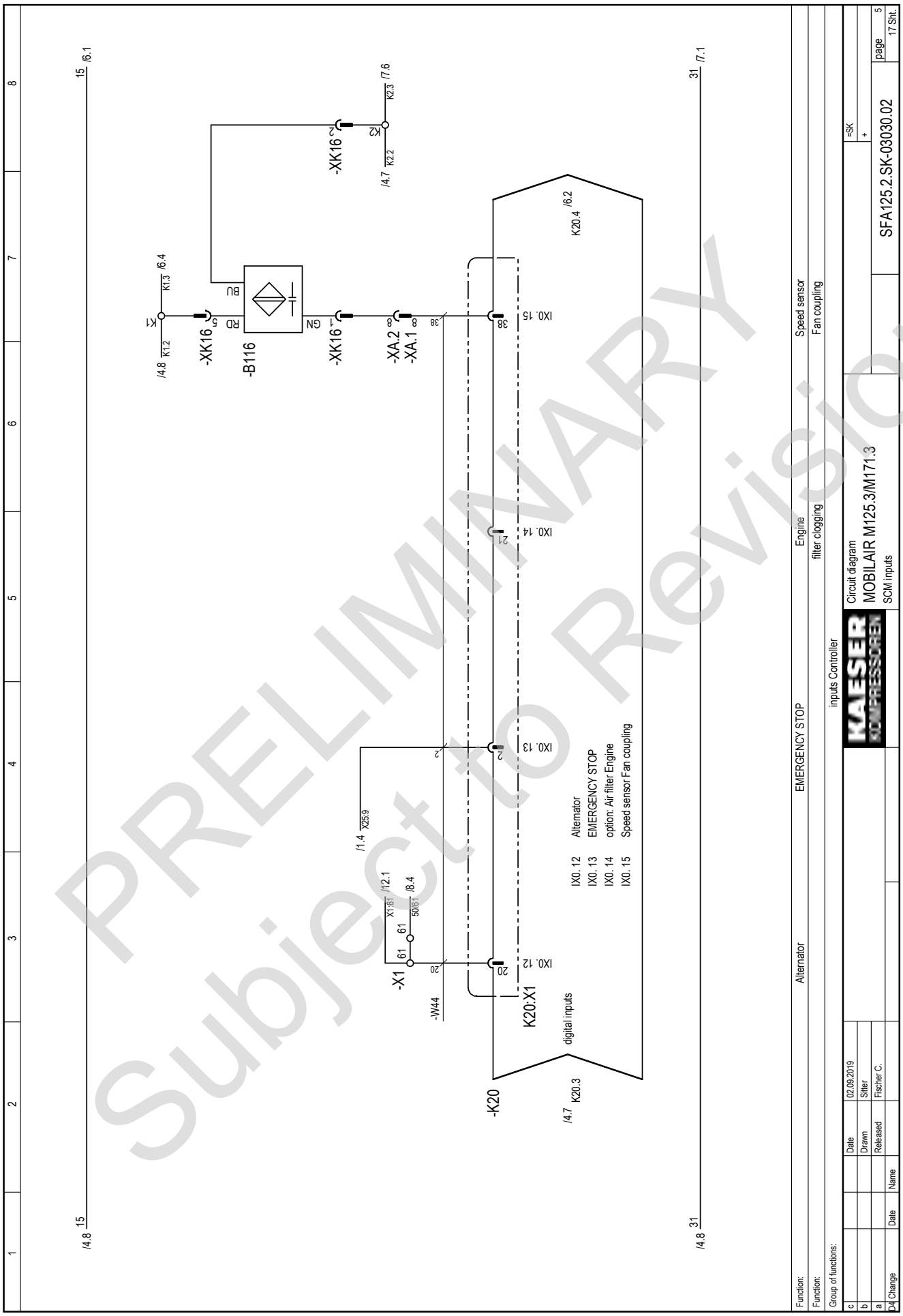

PRELIMINARY
Subject to Revision

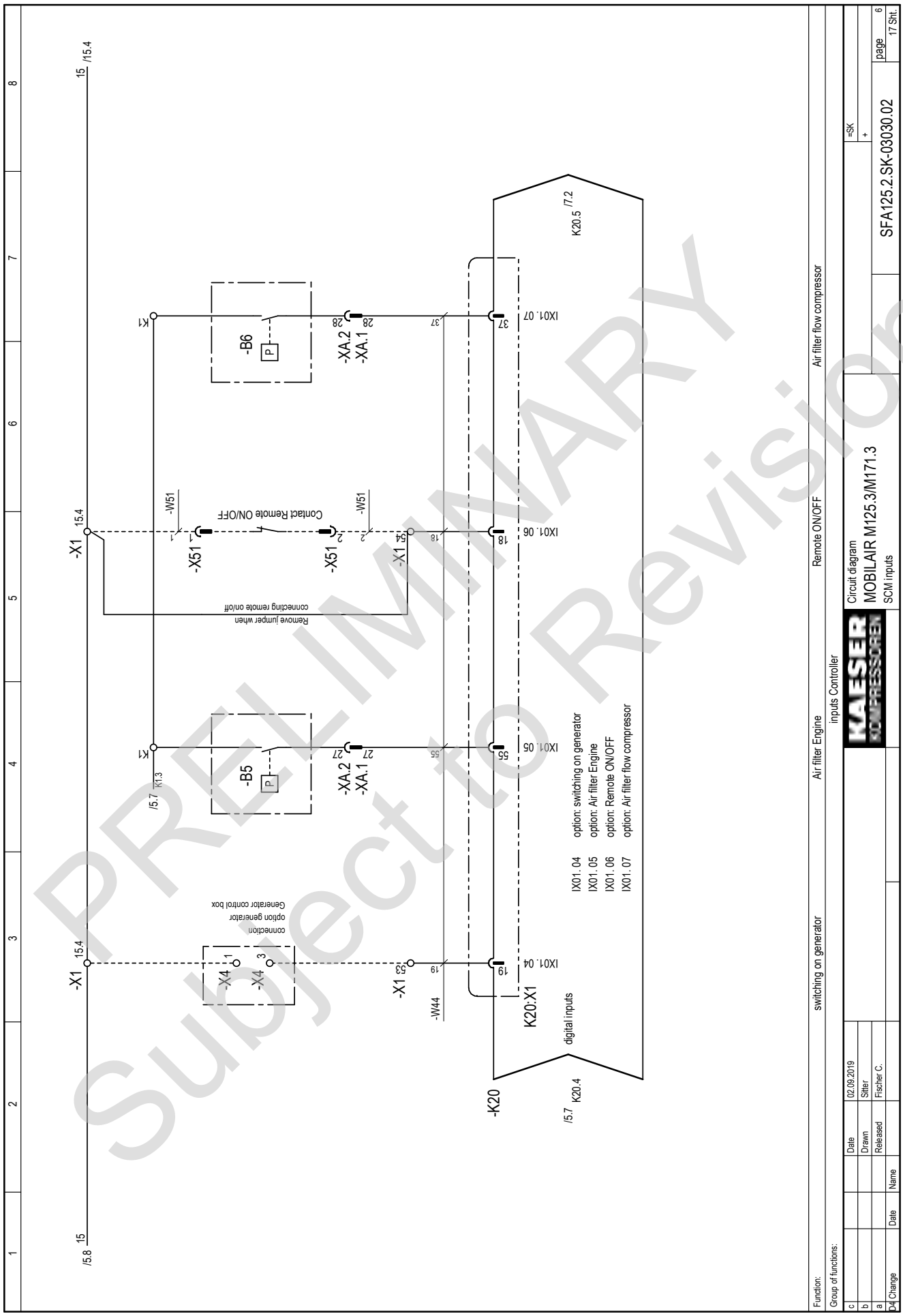

PRELIMINARY
Subject to Revision

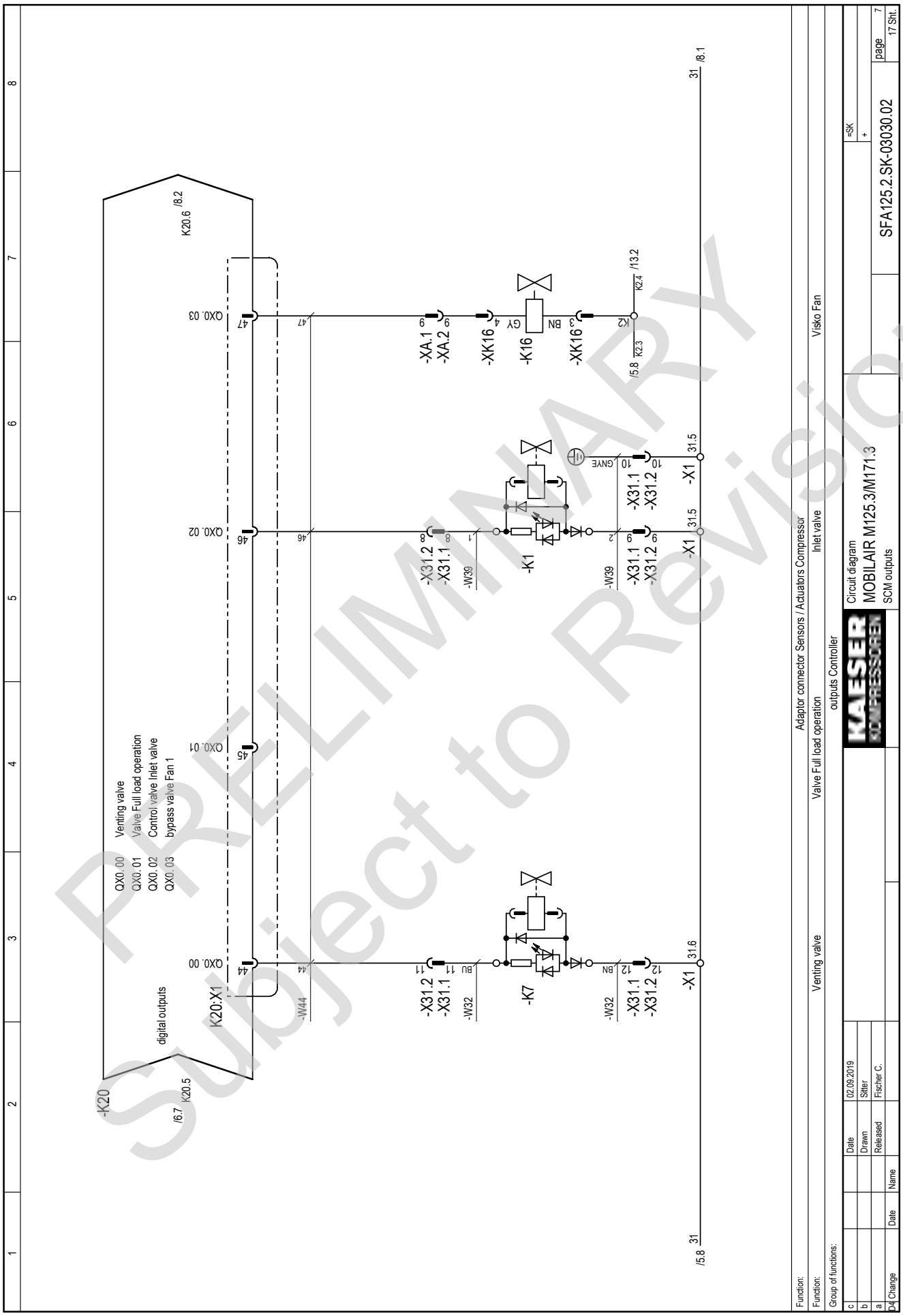

PRELIMINARY
Subject to Revision

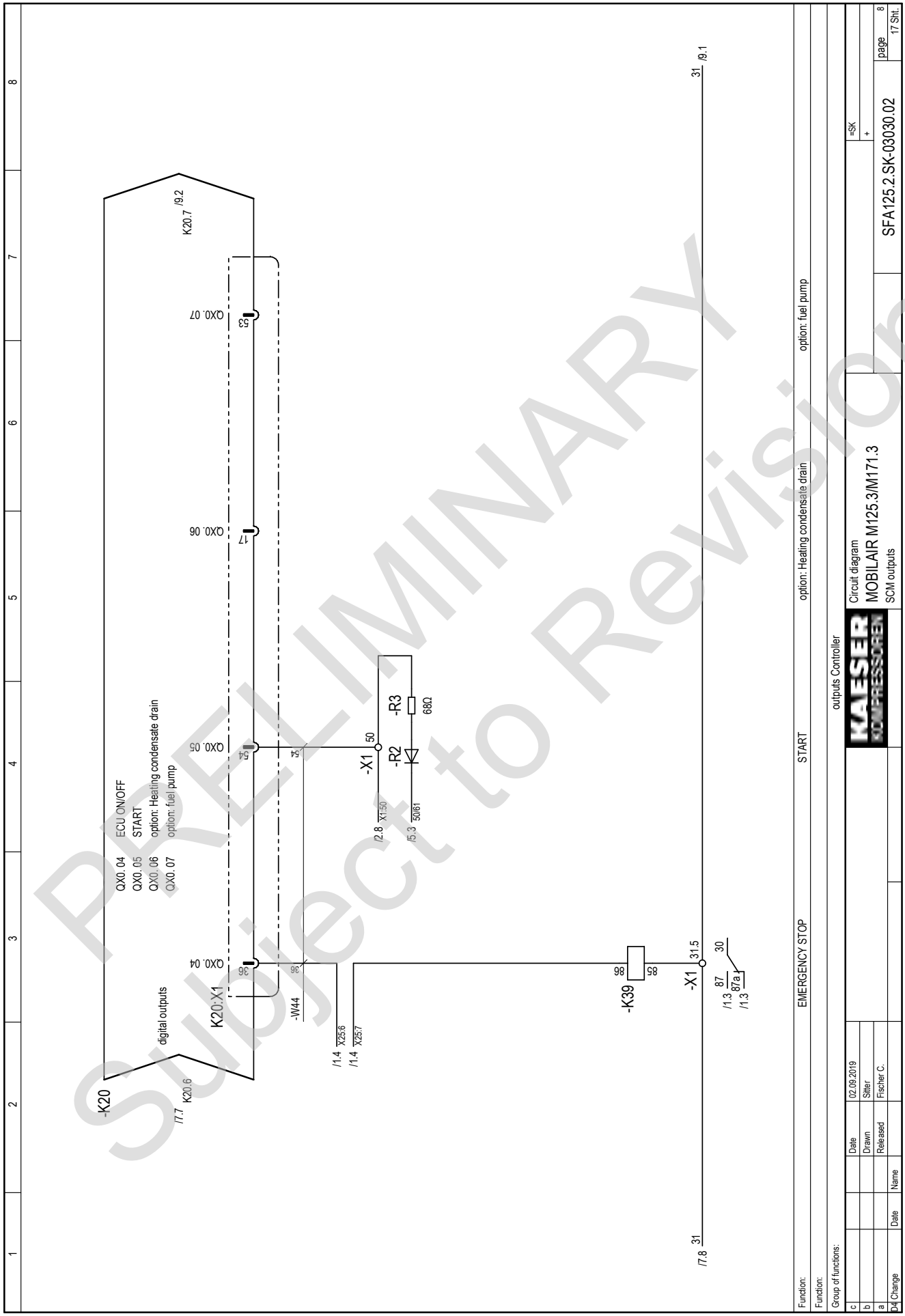

PRELIMINARY
Subject to Revision

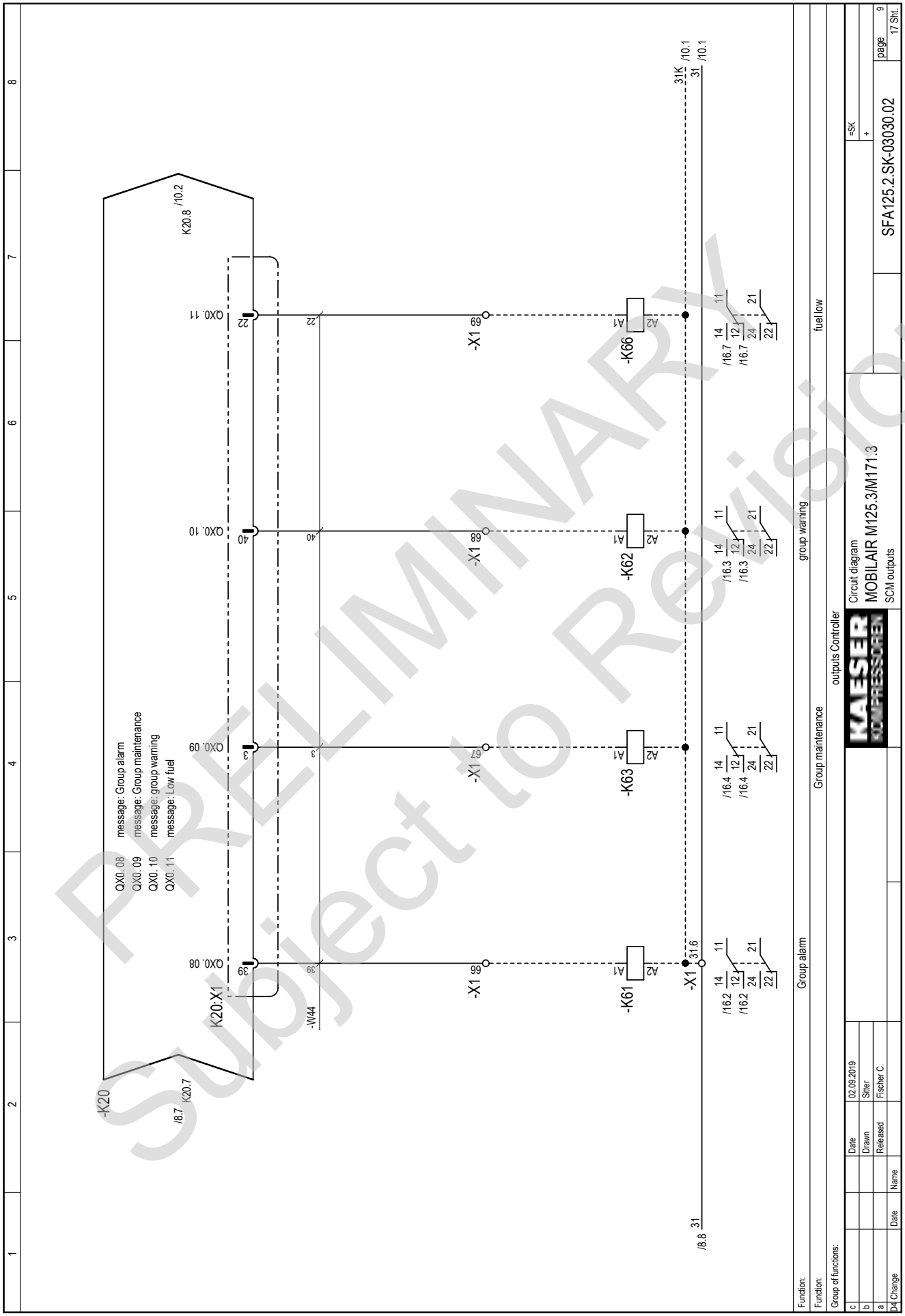

PRELIMINARY
Subject to Revision

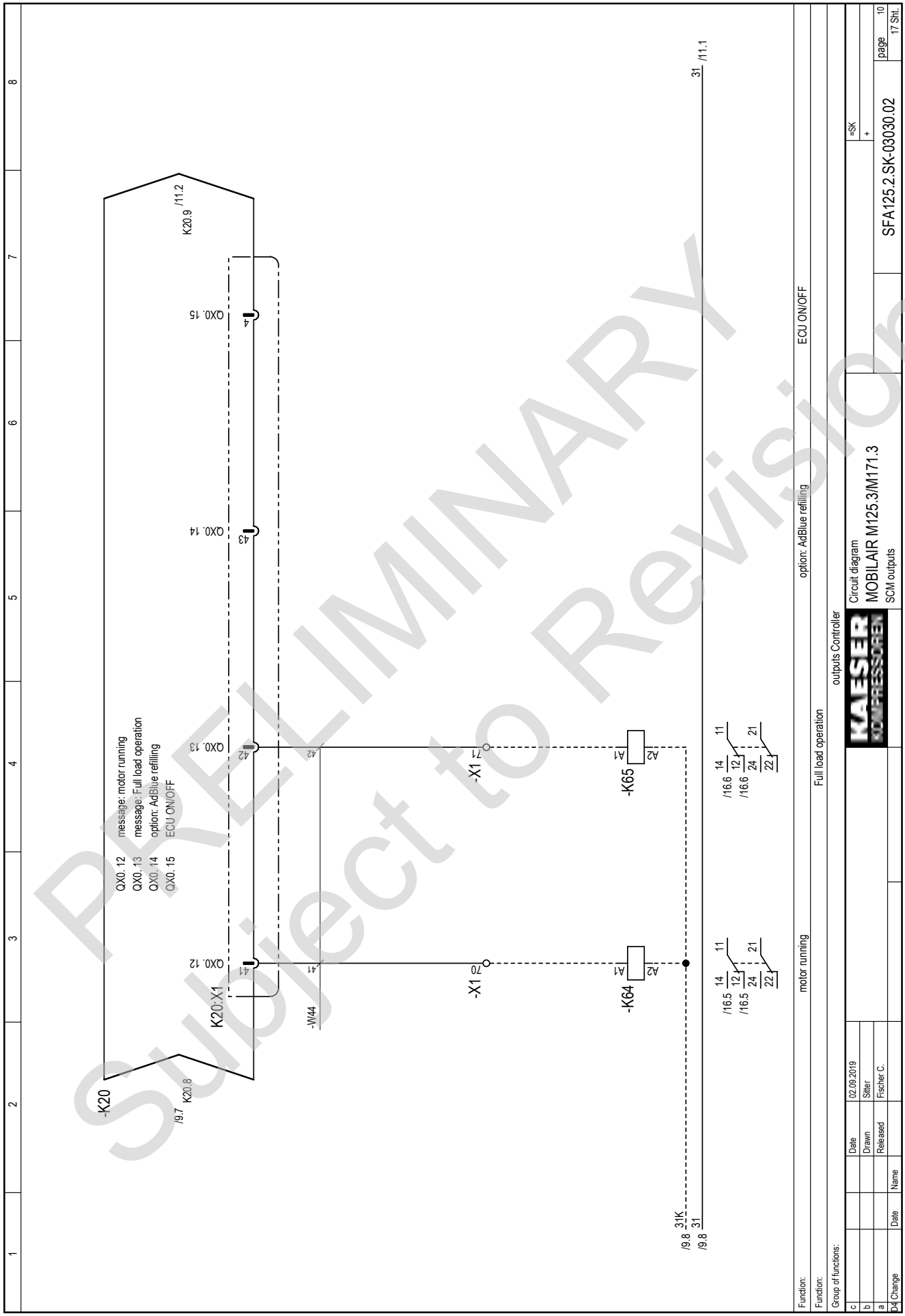

PRELIMINARY
Subject to Revision

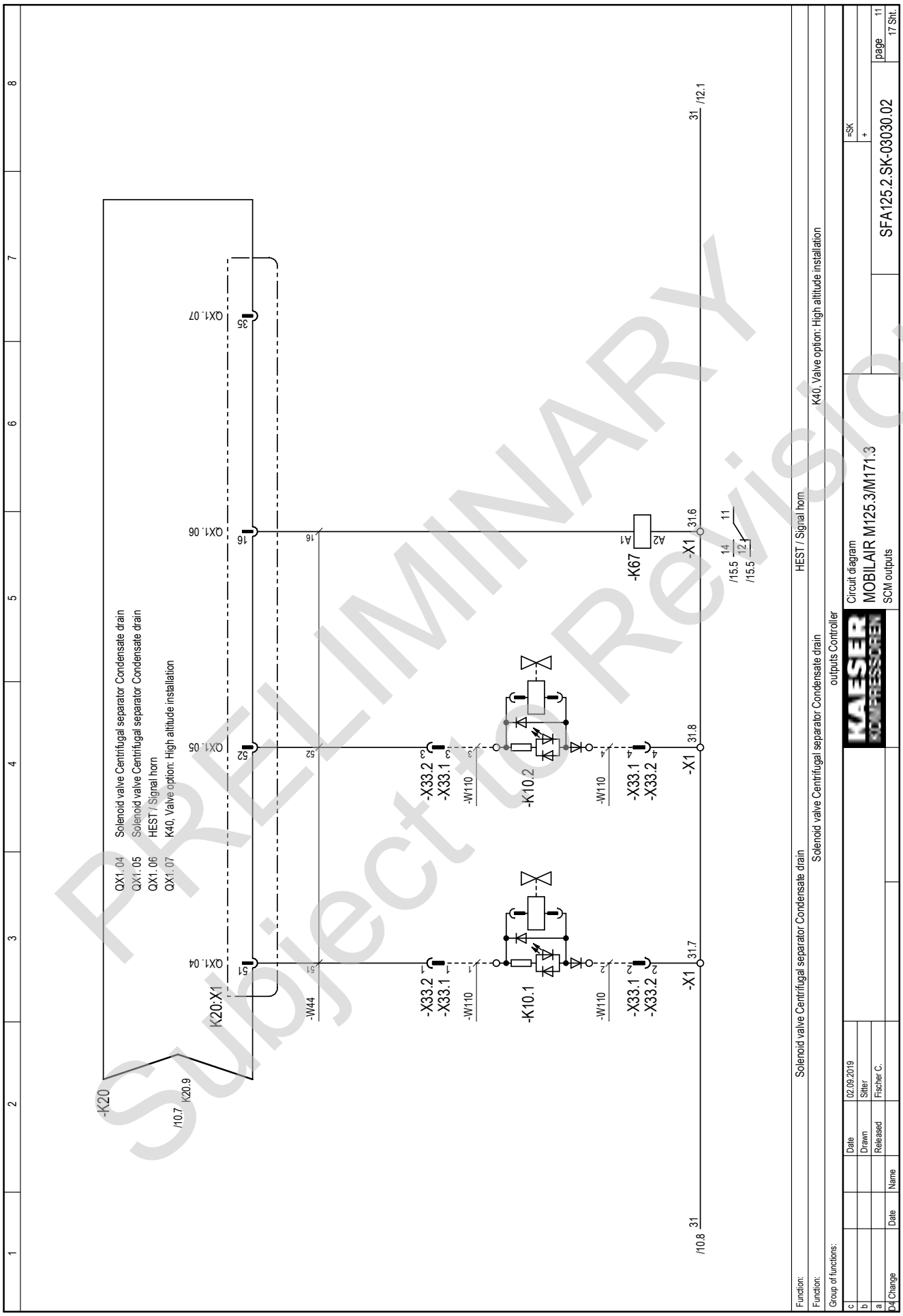

PRELIMINARY
Subject to Revision

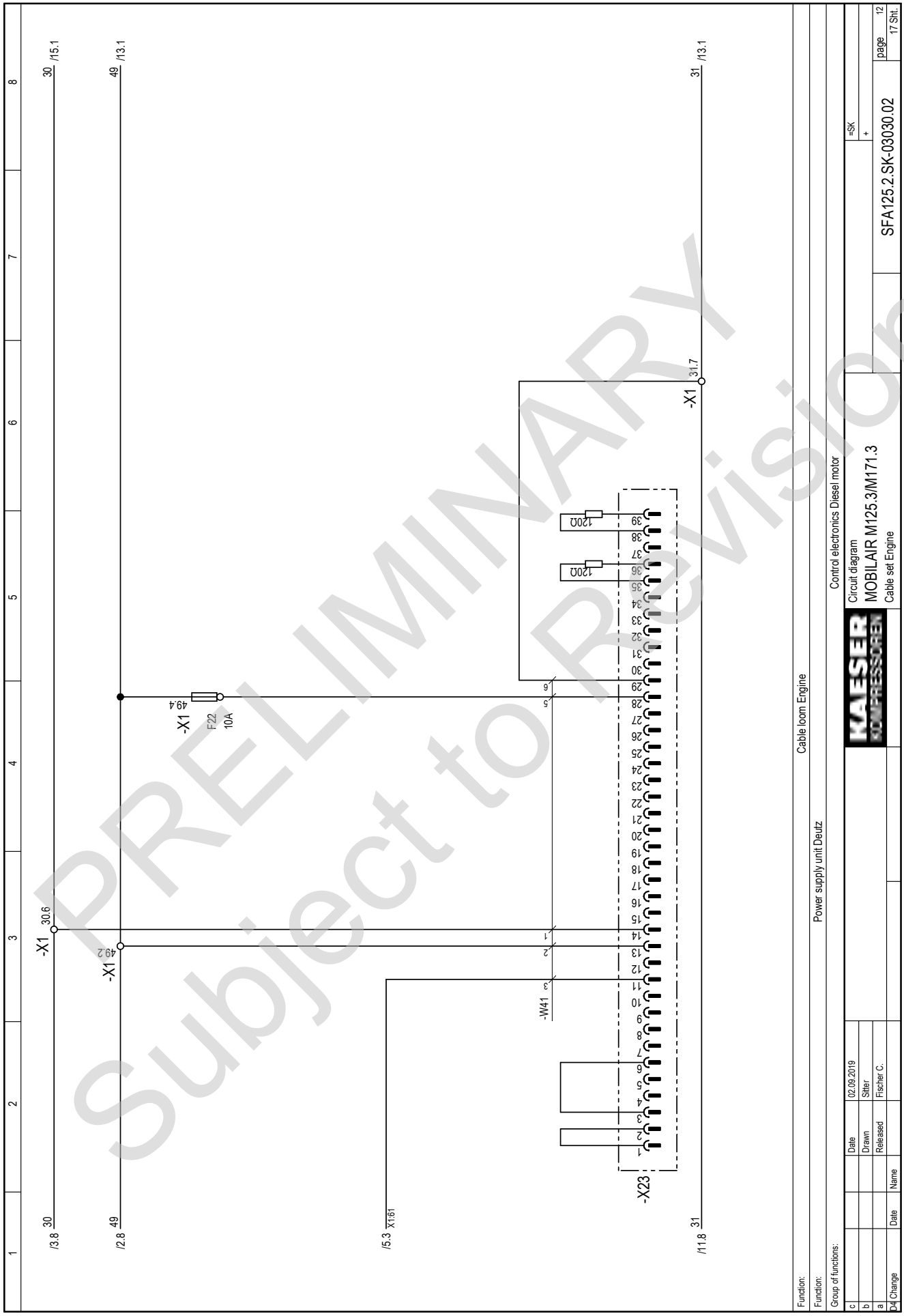

PRELIMINARY
Subject to Revision

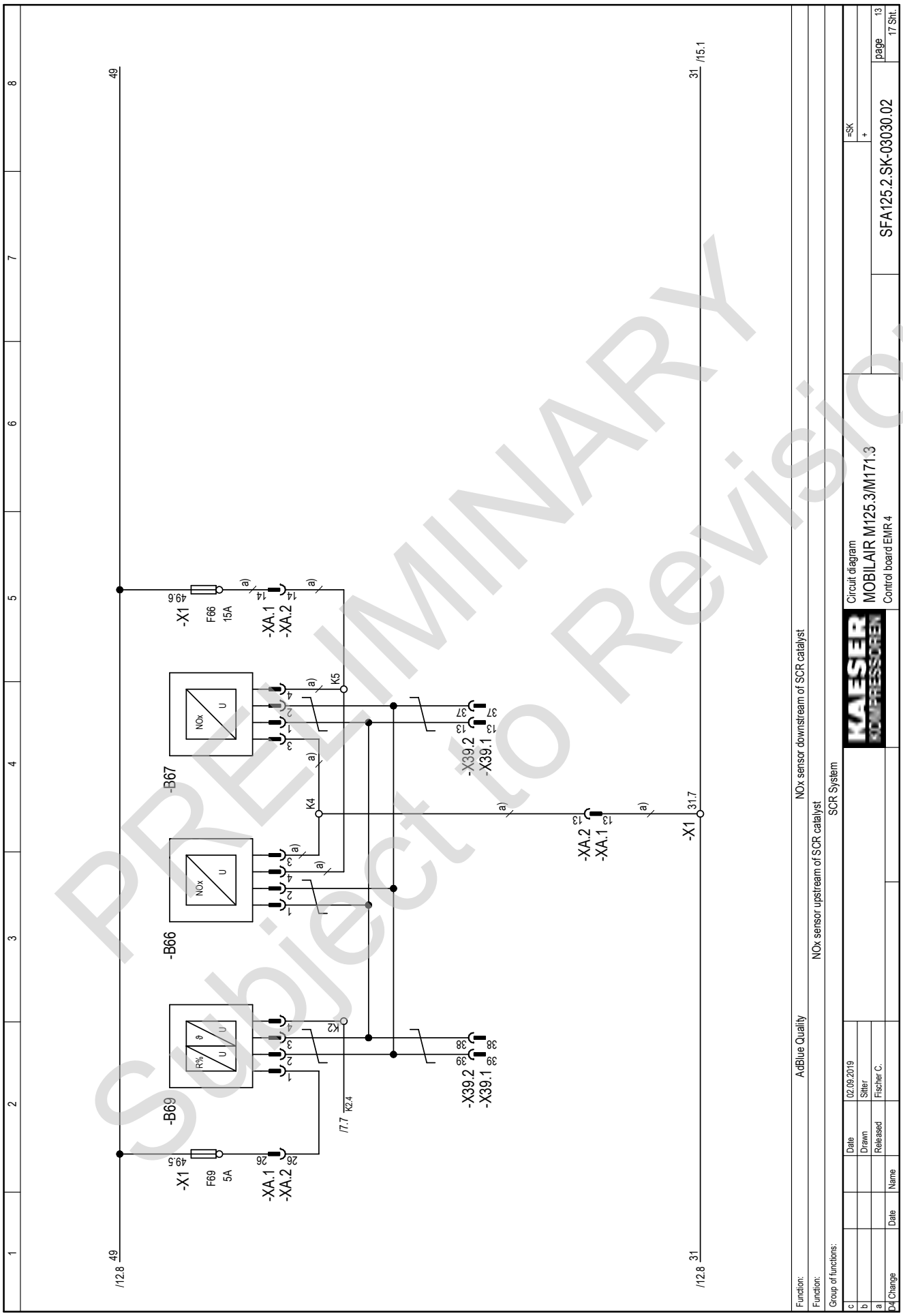

PRELIMINARY
Subject to Revision

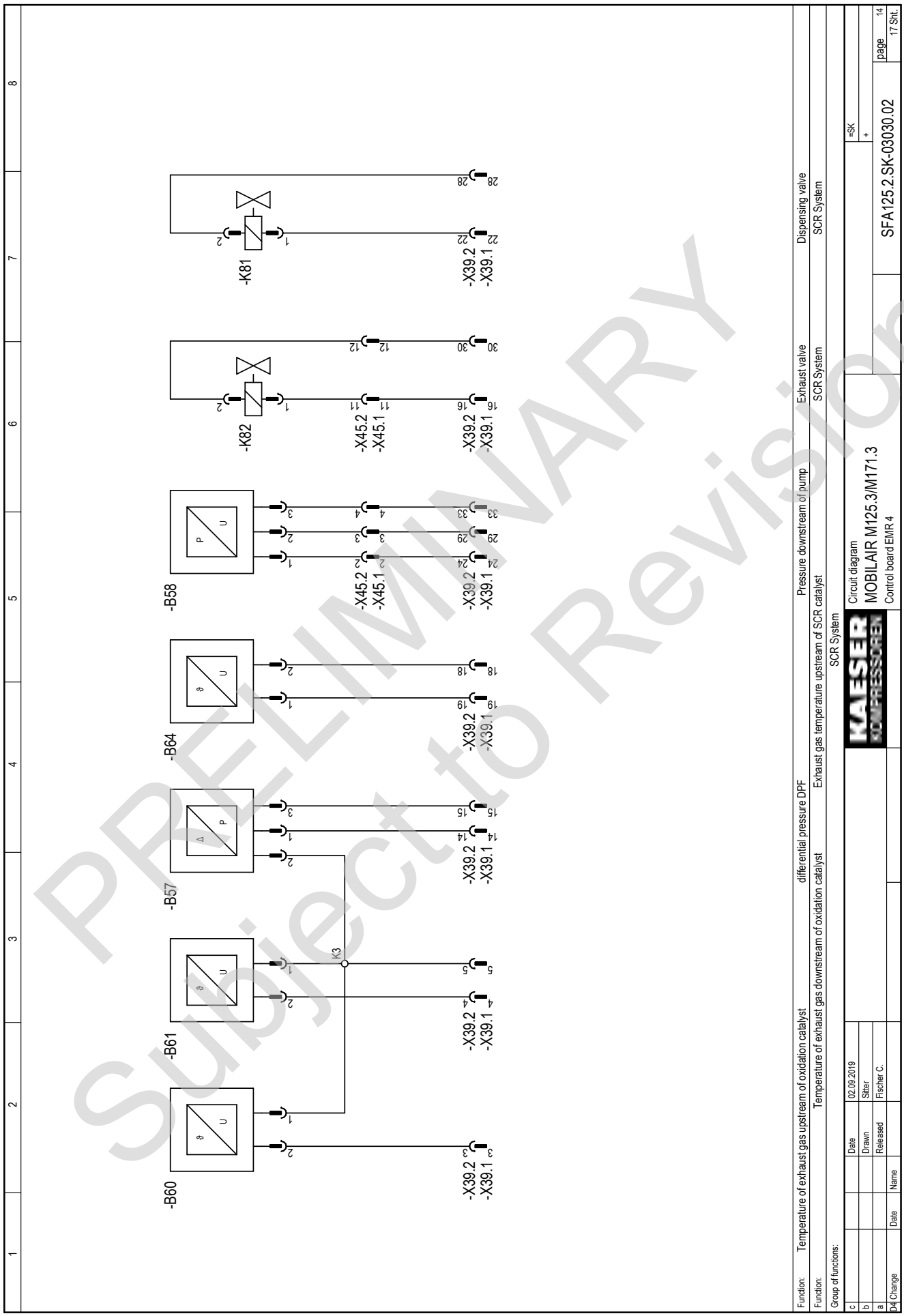

PRELIMINARY
Subject to Revision

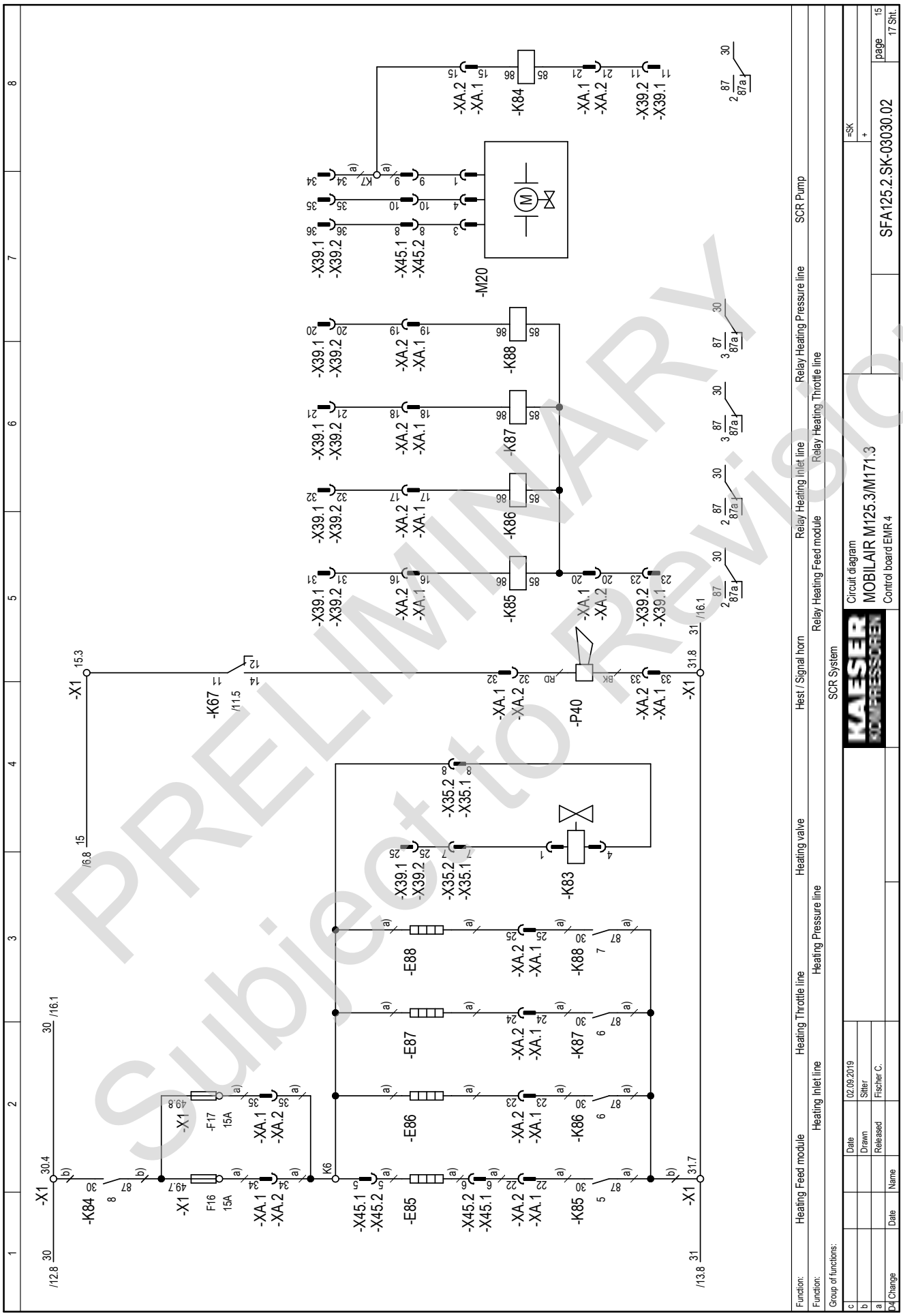

PRELIMINARY
Subject to Revision

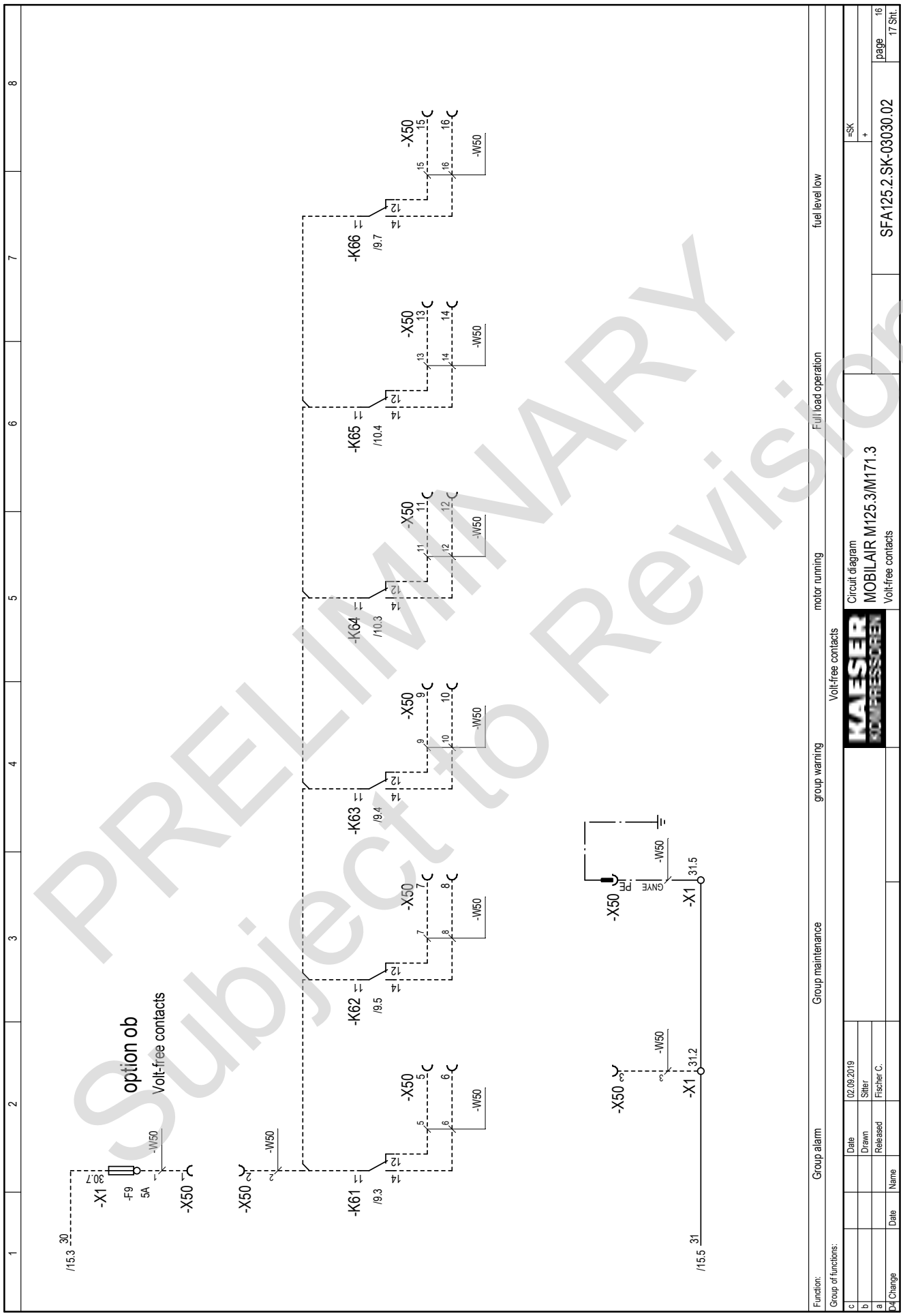

PRELIMINARY
Subject to Revision

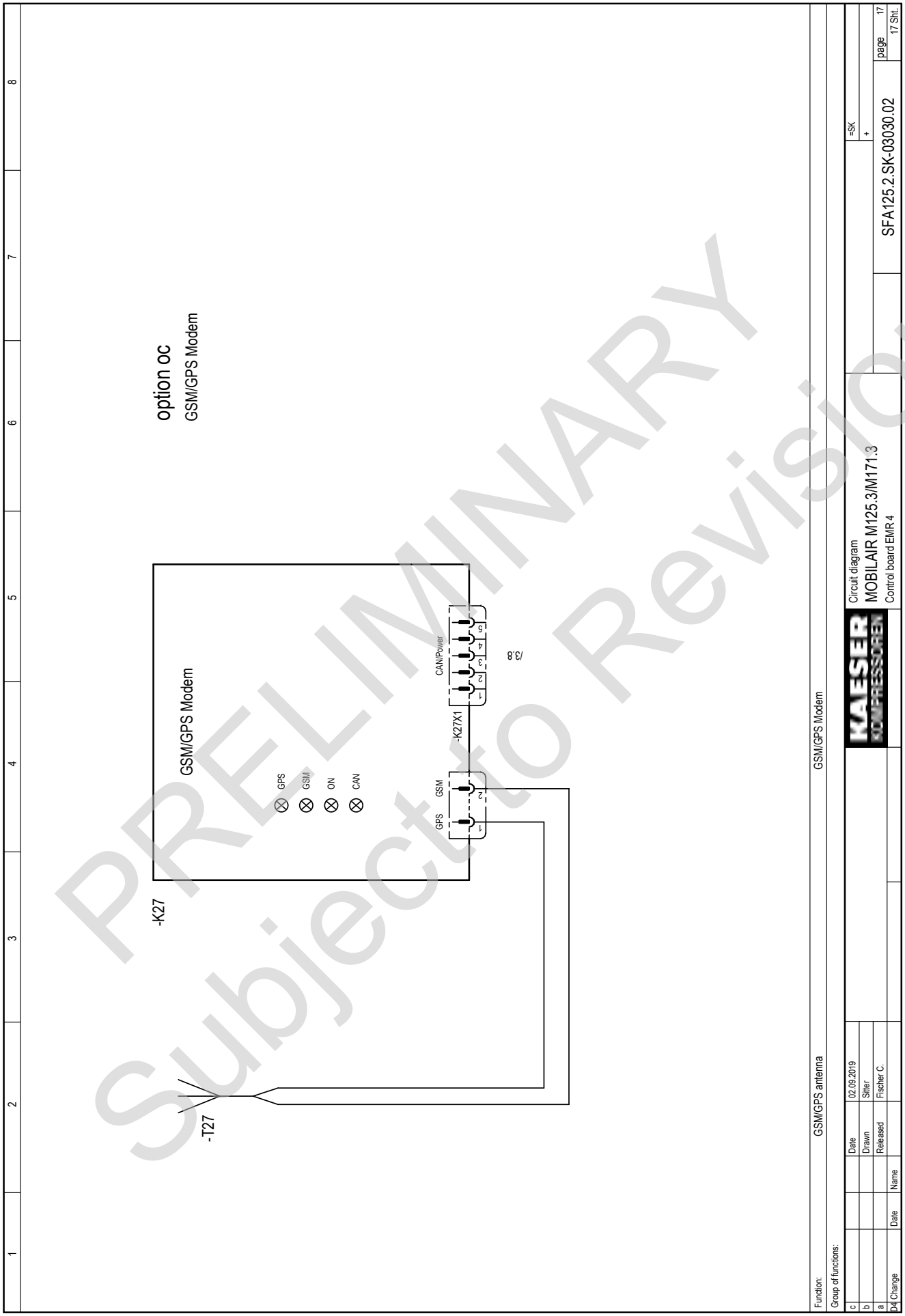

PRELIMINARY
Subject to Revision

A Stück-zahl Qty.	B Benennung und Verwendung Description and function	C Fabrikatsbezeichnung Typ; notwendige techn. Daten (z.B. Steuerspannung, Frequenz, Einstellbereich); Bestell-Nr.; Hersteller / Identification data Type; basic technical data (e.g. control voltage, frequency, adjustable range); order No.; manufacturer			D Lfd. Nr. Item	E Betriebsmittel-Kennz. nach DIN 40719, Teil 2 Identifying symbol of device	F Stromlaufplan Planabschnitt Circuit diagram sheet No.; section No.	G Einbauort Location	Concerns only the manufacturer Wst.-Nr. H Schabl. Nr.	I BZ-Pos.	J VA Kz. *)	K Eingangs-vermerk
	Control cabinet:											
1	Control cabinet		400x300x155	7.3146.02440	Rittal							
1	Control	CR0020		7.9200.00010	ifm	-K20						
1	LOAD-DUMP-Modul	EC2016	24 VDC	7.9200.00100	ifm	-R1						
4	Relay	24 VDC/1W	20 401 100	8.6544.00010	Wehrle	-K85,-K86,-K87,-K88						
4	Relay socket		10 485 008	7.3411.0	Wehrle	-K85,-K86,-K87,-K88						
2	Relay	24V,1S,40A		8.6544.00025	FTM	-K39,-K84						
2	Relay socket			7.3411.00010	FTM	-K39,-K84						
1	Coupling relay	24 VDC/1W		7.3172.00310	Phoenix	-K67						
5	tiered terminals	WKF1,5E/35		7.3149.00860	Wieland	-X1						
26	Terminal	WKFN2,5D2/2/35		7.3149.02080	Wieland	-X1						
2	Terminal	WKFN4/35		7.3149.01810	Wieland	-X1						
2	Terminal	WKF16/35 PV/WKFN		7.3149.02170	Wieland	-X1						
13	Fuse terminal	WKFN 4FSI		7.3149.02160	Wieland	-X1						
1	Fuse UNIVAL		1 A	7.6411.00110	FTM	-F11						
2	Fuse UNIVAL		5 A	7.6411.00040	FTM	-F69,-F100						
2	Fuse UNIVAL		7,5 A	7.6411.00100	FTM	-F15,-F20						
1	Fuse UNIVAL		10 A	7.6411.00050	FTM	-F22						
5	Fuse UNIVAL		15 A	7.6411.00060	FTM	-F12,-F13,-F16,-F17,-F66						
2	Fuse UNIVAL		40 A	7.6411.00090	FTM	-F10,-F39						
3	Resistor		120 Ω	7.5392.00030	Bürklin	-R11,-R12,-R13						
1	Resistor		68 Ω	7.5392.00020	Bürklin	-R3						
1	Diode	BY550-600		7.4780.00030	Bürklin	-R2						
1	Control board EMR 4	Equipment supplied by the user Motor			DEUTZ	-K22						
1	diagnostics plug	Equipment supplied by the user Motor		ITT	DEUTZ	-X22						
4	plug connection 12-pole	1604941-1		7.6589.00520	TYCO	-X24,-X25,-X31,-X33						
1	diagnostics plug		14-pole	7.6589.02000	Boersig	-X100						
1	Rotary control switch	16mm/IP65/3-St.		7.9027.10080	Schlegel	-S100						
1	Switching element	4 S, getr. Bet.		7.9027.10090	Schlegel	-S100						

Bei Nachbestellung von Geräten und Maschinen sind alle in den stark umrandeten aufzuführen. Die Daten in den Spalten D bis G sind zusätzlich unter Nennung anzugeben, soweit sie die Beantwortung technischer Rückfragen erleichtern. die Angabe der Serialnummer erforderlich, falls diese auf dem Typenschild des

Spalten B und C angegebenen Daten dieser Gerätestücklisten-Nummer Für Ersatzteilbestellung ist zusätzlich Erzeugnisses genannt ist.

When reordering the equipment, all data enclosed by the heavy lines of columns addition, the data in columns D to G should be given together with the No. of they ar helpful in answering technical enquiries. When ordering spare parts, product if stated on the rating plate.

B and C should be stated. In this list of equipment, insofar as also quote the serial No. of the

*) Versandanschrift - Kennzeichen

In Zweifelsfällen gilt die deutsche Fassung.

The German version applies in cases of doubt.

c				Date	02.09.2019
b				Drawn	Sitter
a				Released	Fischer C.
F	Change	Date	Name		

Equipment parts list
MOBILAIR M125.3/M171.3
Control cabinet

GFA125.2-03030.02

page 1
2 Sht.

PRELIMINARY
subject to revision

1	2	3	4	5	6	7	8

A Stück-zahl Qty.	B Benennung und Verwendung Description and function	C Fabrikatsbezeichnung Typ; notwendige techn. Daten (z.B. Steuerspannung, Frequenz, Einstellbereich); Bestell-Nr.; Hersteller / Identification data Type; basic technical data (e.g. control voltage, frequency, adjustable range); order No.; manufacturer			D Lfd. Nr. Item	E Betriebsmittel-Kennz. nach DIN 40719, Teil 2 / Identifying symbol of device	F Stromlaufplan Planabschnitt / Circuit diagram sheet No.; section No.	G Einbauort / Location	Concerns only the manufacturer Wst.-Nr. H Schabl. Nr.	I BZ-Pos.	J VA Kz. *)	K Eingangs-vermerk
	Control panel											
1	Operating unit	CR9022		7.9200.00020	ifm		-K21					
1	Display fuel level			8.6476.0	VDO		-P9					
1	switch Control voltage ON/OFF	RKWA		7.9027.10050	Schlegel		-S10					
1	Switching element	BTL5	24VDC, 2A	7.9027.10030	Schlegel		-S10					
1	EMERGENCY STOP	QRUV+MHT00		7.3217.0+7.3218.0	Schlegel		-S1					
2	plug connection 12-pole	350735-1		7.6589.00500	TYCO		-X24,-X25					
	unit components											
1	Pressure transducer		0...16 bar	7.9204.0	Huba		-B10					
1	Pressure transducer		-1...5 bar	7.9203.0	Huba		-B11					
1	Temperature probe		-30...130 °C	7.9202.40010	Bedia		-B40					
1	sensor fuel level			7.9201.00010	Bedia		-B37					
1	sensor coolant level	1S, T=7sec		7.5432.00010	Bedia		-B30					
2	Pressure switch filter clogging	55mbar		7.5429.00030	Mann+Hummel		-B5,-B6					
1	Control valve Inlet valve	24VDC G3/8 2/2-Wege		7.7089.1	Bürkert		-K1					
1	Venting valve	24VDC 3/2-Wege		7.5453.10030	Bürkert		-K7					
1	Power supply unit	Equipment supplied by the user Motor			DEUTZ		-X23					
	model-dependent components											
6	Coupling relay	24V DC 1W		7.3172.00310	Phoenix		-K61...-K66					
1	Fuse terminal	WKFN 4FSI			Wieland		-X1					
1	Fuse UNIVAL		5 A	7.6411.00040	FTM		-F9					
2	Solenoid valve	24V DC G1/8 3/2-W		7.1370.00030	Bürkert		-K10.1,-K10.2					
1	GSM/GPS Modem	model 5301		7.9208.01000	Proemion		-K27					
1	GSM/GPS antenna			7.9208.01010	Proemion		-T27					
1	GSM/GPS Modem interface	M12x1,5 5m, 5-pole, 180°		7.9200.00200	IFM		-X13					

Bei Nachbestellung von Geräten und Maschinen sind alle in den stark umrandeten Spalten B und C angegebenen Daten aufzuführen. Die Daten in den Spalten D bis G sind zusätzlich unter Nennung dieser Gerätestücklisten-Nummer anzugeben, soweit sie die Beantwortung technischer Rückfragen erleichtern. Für Ersatzteilbestellung ist zusätzlich die Angabe der Serialnummer erforderlich, falls diese auf dem Typenschild des Erzeugnisses genannt ist.

In Zweifelsfällen gilt die deutsche Fassung.

When reordering the equipment, all data enclosed by the heavy lines of columns B and C should be stated. In addition, the data in columns D to G should be given together with the No. of this list of equipment, insofar as they ar helpful in answering technical enquiries. When ordering spare parts, also quote the serial No. of the product if stated on the rating plate.

The German version applies in cases of doubt.

*) Versandanschrift - Kennzeichen

c				Date	02.09.2019
b				Drawn	Sitter
a				Released	Fischer C.
F	Change	Date	Name		

KAESER KOMPRESSOREN

Equipment parts list
MOBILAIR M125.3/M171.3

GFA125.2-03030.02

page 2
2 Sht.

PRELIMINARY
subject to Revision

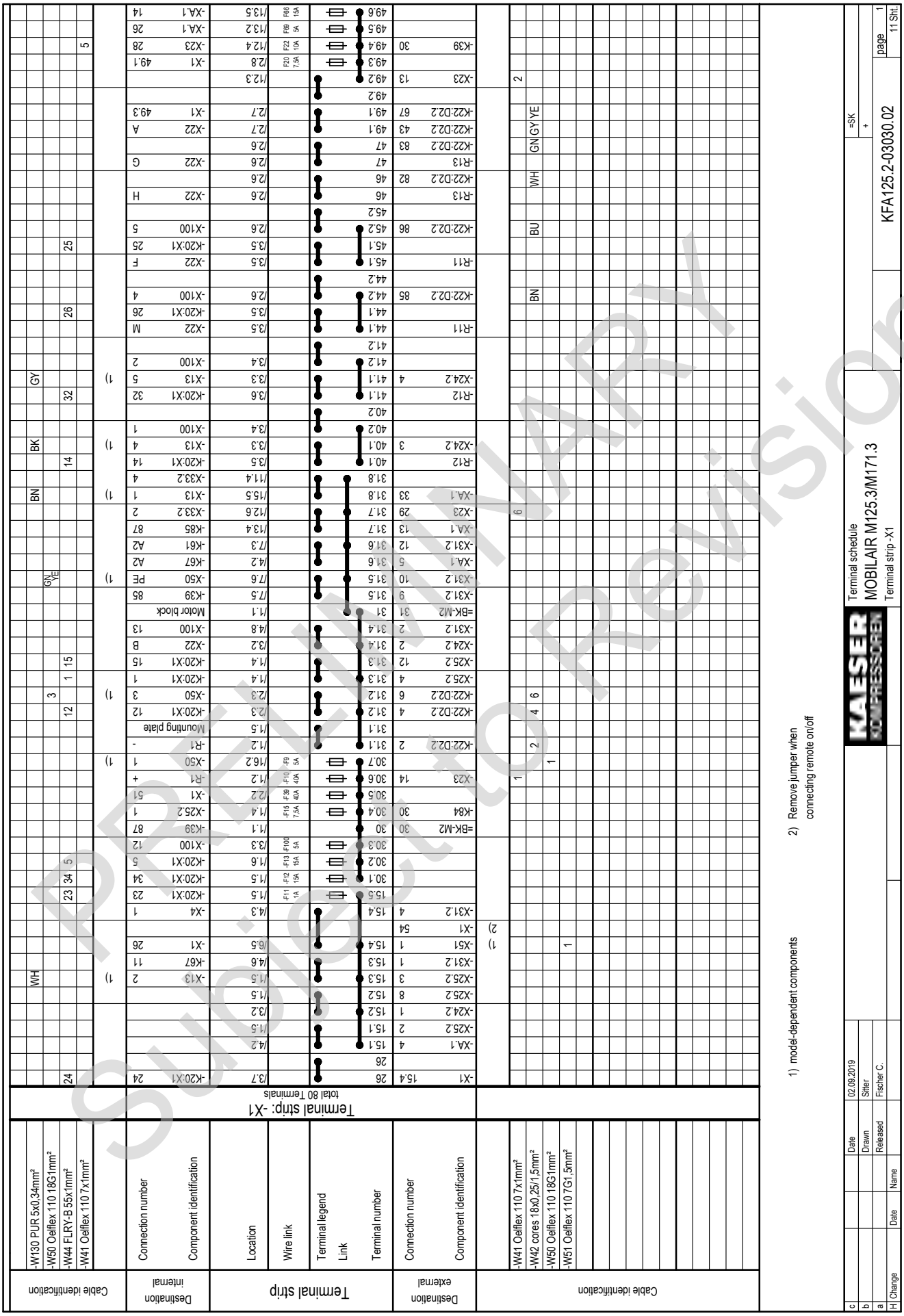
Cable identification
-W130 PUR 5x0,34mm²
-W50 Oelflex 110 18G1mm²
-W44 FLRY-B 55x1mm²
-W41 Oelflex 110 7x1mm²
Destination internal
Connection number
Component identification
Terminal strip
Location
Wire link
Terminal legend
Link
Terminal number
Terminal strip: -X1
total 80 Terminals
Destination external
Connection number
Component identification
Cable identification
-W41 Oelflex 110 7x1mm²
-W42 cores 18x0,25/1,5mm²
-W50 Oelflex 110 18G1mm²
-W51 Oelflex 110 7G1,5mm²
1) model-dependent components
2) Remove jumper when connecting remote on/off
Terminal schedule
MOBILAIR M125.3/M171.3
Terminal strip -X1
KFA125.2-03030.02
=SK
+
page 1
11 Sht.
Date 02.09.2019
Drawn Sitter
Released Fischer C.
Name
Date
H Change
PRELIMINARY
Subject to Revision

| Cable identification | | |

Cable identification	Destination internal	Terminal strip					Destination external	Cable identification
	Connection number	Component identification	Location	Wire link	Terminal legend Link	Terminal number	Connection number	Component identification
	Plug connection: =BT-X24.1 total 12 Terminals							
						1	-K21X1 2	-W11 PUR 2x0,25+2x0,34mm² RD
						2	-K21X1 3	BK
						3	-K21X1 4	WH
						4	-K21X1 5	BU
						5	-K21X2 1	-W13 PUR 5x0,34mm² BN
						6	-K21X2 2	WH
						7	-K21X2 3	BU
						8		
						9		
						10		
						11		
						12		
	Plug connection: =SK-X24.2 total 12 Terminals							
						1		
						2		
						3		
						4		
						5		
						6		
						7		
						8		
						9		
						10		
						11		
						12		

c			Date	02.09.2019	
b			Drawn	Sitter	
a			Released	Fischer C.	
H	Change	Date	Name		

KAESER KOMPRESSOREN

Terminal schedule
MOBILAIR M125.3/M171.3
Plug connection -X24

KFA125.2-03030.02

page 10
11 Sht.

PRELIMINARY
Subject to Revision

Cable identification	Destination internal	Terminal strip					Destination external		Cable identification
-W44 FLRY-B 55x1mm²	Connection number	Component identification	Location	Wire link	Terminal legend / Link	Terminal number	Connection number	Component identification	-W12 Oelflex 110 12G1,5mm²
	Plug connection: =BT-X25.1 total 12 Terminals								
						1	13	-S10	1
			=BT/1.8			2	14	-S10	2
			=BT/1.8			3	+	-P9	3
			=BT/1.8			4	-	-P9	4
			=BT/1.8			5	S	-P9	5
			=BT/1.8			6	11	-S1	6
			=BT/1.8			7	12	-S1	7
			=BT/1.8			8	21	-S1	8
			=BT/1.8			9	22	-S1	9
			=BT/1.8			10			
						11			
			=BT/1.8			12		earth	GN/YE
	Plug connection: =SK-X25.2 total 12 Terminals								
			=SK/1.3			1			
		-X1 30.4	=SK/1.3			2			
		-X1 15.1	=SK/1.3			3			
		-X1 15.3	=SK/1.3			4			
		-X1 31.3	=SK/1.3			5			
		-XA1 7	=SK/1.3			6			
36		-K20 X1:36	=SK/1.3			7			
		-K39 86	=SK/1.3			8			
		-X1 15.2	=SK/1.3			9			
2		-K20 X1:2	=SK/1.3			10			
						11			
		-X1 31.3	=SK/1.3			12			

Terminal schedule
MOBILAIR M125.3/M171.3
Plug connection -X25

KFA125.2-03030.02

page 11
11 Sht.

	Date	02.09.2019
Drawn	Sitter	
Released	Fischer C.	

H	Change	Date	Name
a			
b			
c			

PRELIMINARY
Subject to Revision

Cable identification	Destination internal	Terminal strip				Destination external	Cable identification
-W44 FLRY-B 55x1mm²	Connection number / Component identification	Location	Wire link	Terminal legend / Link	Terminal number	Connection number / Component identification	-W32 Oelflex 110 2x0,5mm² / -W39 Oelflex 110 3G1,5mm² / -W100 PUR 5x0,34mm² / -W101 PUR 5x0,34mm² / -W106 Oelflex 110 4x1mm²
	Plug connection: -X31.1 total 12 Terminals						
		/4.6			1	-B40 1	
		/4.6			2	-B40 2	
		/4.5			3	-B40 3	3
		/4.3			4	-B10 1	BN
						-B11 1	BN
		/4.3			5	-B10 3	BU
		/4.4			6	-B11 3	BU
		/4.4			7	-B10 4	BK
						-B11 4	BK
		/7.5			8	-K1	1
		/7.5			9	-K1	2
		/7.6			10	-K1 PE	GN YE
		/7.3			11	-K7	BU
		/7.3			12	-K7	BN
	Plug connection: -X31.2 total 12 Terminals						
		/4.6			1	-X1 15.3	
		/4.6			2	-X1 31.4	
6		/4.5			3	-K20:X1 9	
		/4.3			4	-X1 15.4	
8		/4.3			5	-K20:X1 8	
27		/4.4			6	-K20:X1 27	
		/4.4			7		
46		/7.5			8	-K20:X1 46	
		/7.5			9	-X1 31.5	
		/7.6			10	-X1 31.5	
44		/7.3			11	-K20:X1 44	
		/7.3			12	-X1 31.6	

| | | | | | |

Cable identification: -W44 FLRY-B 55x1mm²

Destination internal: Connection number / Component identification

Plug connection: -X33.1
total 12 Terminals

Connection number	Component identification
51	-K20:X1
52	-K20:X1
31.7	-X1
31.8	-X1

Terminal strip

Terminal number	Link	Terminal legend	Wire link	Location
1				/11.3
2				/11.3
3				/11.4
4				/11.4
5				
6				
7				
8				
9				
10				
11				
12				

Destination external: Connection number / Component identification

Plug connection: -X33.2
total 12 Terminals

Connection number	Component identification
1	-K10.1
2	-K10.1
3	-K10.2
4	-K10.2

Cable identification: -W110 Oelflex 110 4x0,75mm²

1	
2	
3	
4	

Date		02.09.2019	
Drawn		Sitter	
Released		Fischer C.	
Date	Name		

H	Change
a	
b	
c	

KAESER KOMPRESSOREN

Terminal schedule
MOBILAIR M125.3/M171.3
Plug connection -X33

=SK
+
KFA125.2-03030.02
page 21
11 Sht.

PRELIMINARY
Subject to Revision

Cable identification	Destination internal	Terminal strip				Destination external	Cable identification
	Connection number	Component identification	Location	Wire link	Terminal legend / Link / Terminal number	Connection number	Component identification
	Plug connection: -X35.1 total 12 Terminals						
			/2.5		1	-B31	-W19 Oelflex 110 4x1mm²
			/2.5		2	-B31	
			/4.7		3	-B37 1	1
			/4.7		4	-B37 2	2
			/4.7		5	-B37 3	3
			/4.7		6	-B37 4	4
			/15.4		7	-K83 1	
			/15.4		8	-K83 4	
					9		
					10		
					11		
					12		
	Plug connection: -X35.2 total 12 Terminals						
			/2.5		1	-XA.1	1
			/2.5		2	-XA.1	2
			/4.7		3		K1
			/4.7		4		
			/4.7		5	-XA.2	6
			/4.7		6	-XA.2	7
			/15.4		7	-X39.2	25
			/15.4		8		K6
					9		
					10		
					11		
					12		

c							
b				Date	02.09.2019		
a				Drawn	Sitter		
H	Change	Date	Name	Released	Fischer C.		

KAESER KOMPRESSOREN

Terminal schedule
MOBILAIR M125.3/M171.3
Plug connection -X35

=SK
+

KFA125.2-03030.02

page 22
11 Sht.

PRELIMINARY
Subject to Revision

Plug connection: -X39.2
total 39 Terminals

Cable identification	Destination internal		Terminal strip					Destination external		Cable identification
	Connection number	Component identification	Location	Wire link	Terminal legend Link	Terminal number		Connection number	Component identification	
						1				
						2				
						3				
						4				
						5				
						6				
						7				
						8				
						9				
						10				
						11				
						12				
						13				
						14				
						15				
						16				
						17				
						18				
						19				
						20				
						21				
						22				
						23				
						24				
						25				
						26				
						27				
						28				
						29				
						30				
						31				
						32				
						33				
						34				
						35				
						36				
						37				
						38				
						39				

| | | | | | |

Cable identification	Destination internal	Terminal strip					Destination external	Cable identification
	Connection number	Component identification	Location	Wire link	Terminal legend	Link	Terminal number	Connection number	Component identification
	Plug connection: -X45.1 total 12 Terminals								
							1		
		-X39.2	24		/14.5		2		
		-X39.2	29		/14.5		3		
		-X39.2	33		/14.6		4		
		K6			/15.2		5		
		-XA.2	22		/15.2		6		
							7		
		-X39.2	36		/15.7		8		
		K7			/15.7		9		
		-X39.2	35		/15.7		10		
		-X39.2	16		/14.6		11		
		-X39.2	30		/14.7		12		
	Plug connection: -X45.2 total 12 Terminals								
							1		
					/14.5		2	-BS8	1
					/14.5		3	-BS8	2
					/14.6		4	-BS8	3
					/15.2		5	-EB5	
					/15.2		6	-EB5	
							7		
					/15.7		8	-M20	3
					/15.7		9	-M20	1
					/15.7		10	-M20	4
					/14.6		11	-K82	1
					/14.7		12	-K82	2

| | | | | | | | |

Plug connection: -XA.1
total 37 Terminals

Cable identification	Destination internal		Terminal strip					Destination external	
-W44 FLRY-B 55x1mm² / -W42 cores 18x0.25/1.5mm²	Connection number	Component identification	Location	Wire link	Terminal legend / Link	Terminal number		Connection number	Component identification
						1			
			/2.5			2			
		-X35.2	1						
			/2.5			3			
		-X35.2	2						
			/4.2			4			
		-X1	15.1						
			/4.2			5			
		-X1	31.6						
			/4.7			6			
28		-K20:X1	28						
			/4.7			7			
		-X25.2	5						
			/5.7			8			
38		-K20:X1	38						
			/7.7			9			
47		-K20:X1	47						
			/2.4			10			
		-B59	1						
			/2.4			11			
		-B59	2						
			/2.4			12			
		-B59	3						
			/13.4			13			
		-X1	31.7						
			/13.5			14			
		-X1	49.6						
			/15.8			15			
		-K84	86						
			/15.5			16			
		-K85	86						
			/15.6			17			
		-K86	86						
			/15.6			18			
		-K87	86						
			/15.7			19			
		-K88	86						
			/15.5			20			
		-K85	85						
			/15.8			21			
		-K84	85						
			/15.2			22			
		-K85	30						
			/15.2			23			
		-K86	30						
			/15.3			24			
		-K87	30						
			/15.3			25			
		-K88	30						
			/13.2			26			
		-X1	49.5						
			/6.4			27			
55		-K20:X1	55						
			/6.7			28			
37		-K20:X1	37						
			/4.2			29			
	BK	-K22	D2.2:62						
			/2.5			30			
		-B80	1						
			/2.5			31			
		-B80	2						
			/15.5			32			
		-K67	14						
			/15.5			33			
		-X1	31.8						
			/15.2			34			
		-X1	49.7						
			/15.2			35			
		-X1	49.8						
						36			
						37			

Cable identification

Date	02.09.2019
Drawn	Sitter
Released	Fischer C.

KAESER KOMPRESSOREN

Terminal schedule
MOBILAIR M125.3/M171.3
Plug connection -XA.1

=SK
+
KFA125.2-03030.02
page 30
11 Sht.

H	Change	Date	Name
a			
b			
c			

PRELIMINARY
Subject to Revision

Plug connection: -XA.2
total 37 Terminals

Cable identification	Destination internal: Connection number	Destination internal: Component identification	Terminal strip: Location	Terminal strip: Wire link	Terminal strip: Terminal legend / Link	Terminal strip: Terminal number	Destination external: Connection number	Destination external: Component identification	Cable identification
						37			
						36			
			/15.2			35	K6		
			/15.2			34	K6		
			/15.5			33		-P40	
			/15.5			32		-P40	
			/2.5			31	50	-K22:D2.2	
			/2.5			30	10	-K22:D2.2	3 RD/WH RD/BK
			/4.2			29	3	-B30	
			/6.7			28		-B6	
			/6.4			27		-B5	
			/13.2			26	1	-B69	
			/15.3			25		-E88	
			/15.3			24		-E87	
			/15.2			23		-E86	
			/15.2			22	6	-X45.1	
			/15.8			21	11	-X39.2	
			/15.5			20	23	-X39.2	
			/15.7			19	20	-X39.2	
			/15.6			18	21	-X39.2	
			/15.6			17	32	-X39.2	
			/15.5			16	31	-X39.2	
			/15.8			15		K7	
			/13.5			14		K5	
			/13.4			13		K4	
			/2.4			12	13	-K22:D2.2	RD/GN
			/2.4			11	31	-K22:D2.2	RD/BU GY/TE
			/2.4			10	18	-K22:D2.2	
			/7.7			9	4	-XK16	
			/5.7			8	1	-XK16	
			/4.7			7	6	-X35.2	
			/4.7			6	5	-X35.2	
			/4.2			5		K2	
			/4.2			4		K1	
						3			
			/2.5			2	26	-K22:D2.2	VT PK
			/2.5			1	70	-K22:D2.2	

Cable identification: -W18 4x1mm²
Cable identification: -W42 cores 18x0.25/1.5mm²

	Date	02.09.2019	
	Drawn	Sitter	
	Released	Fischer C.	
H Change	Date	Name	

KAESER KOMPRESSOREN
Terminal schedule
MOBILAIR M125.3/M171.3
Plug connection -XA.2
=SK
+
KFA125.2-03030.02
page 31
11 Sht.

PRELIMINARY
Subject to Revision

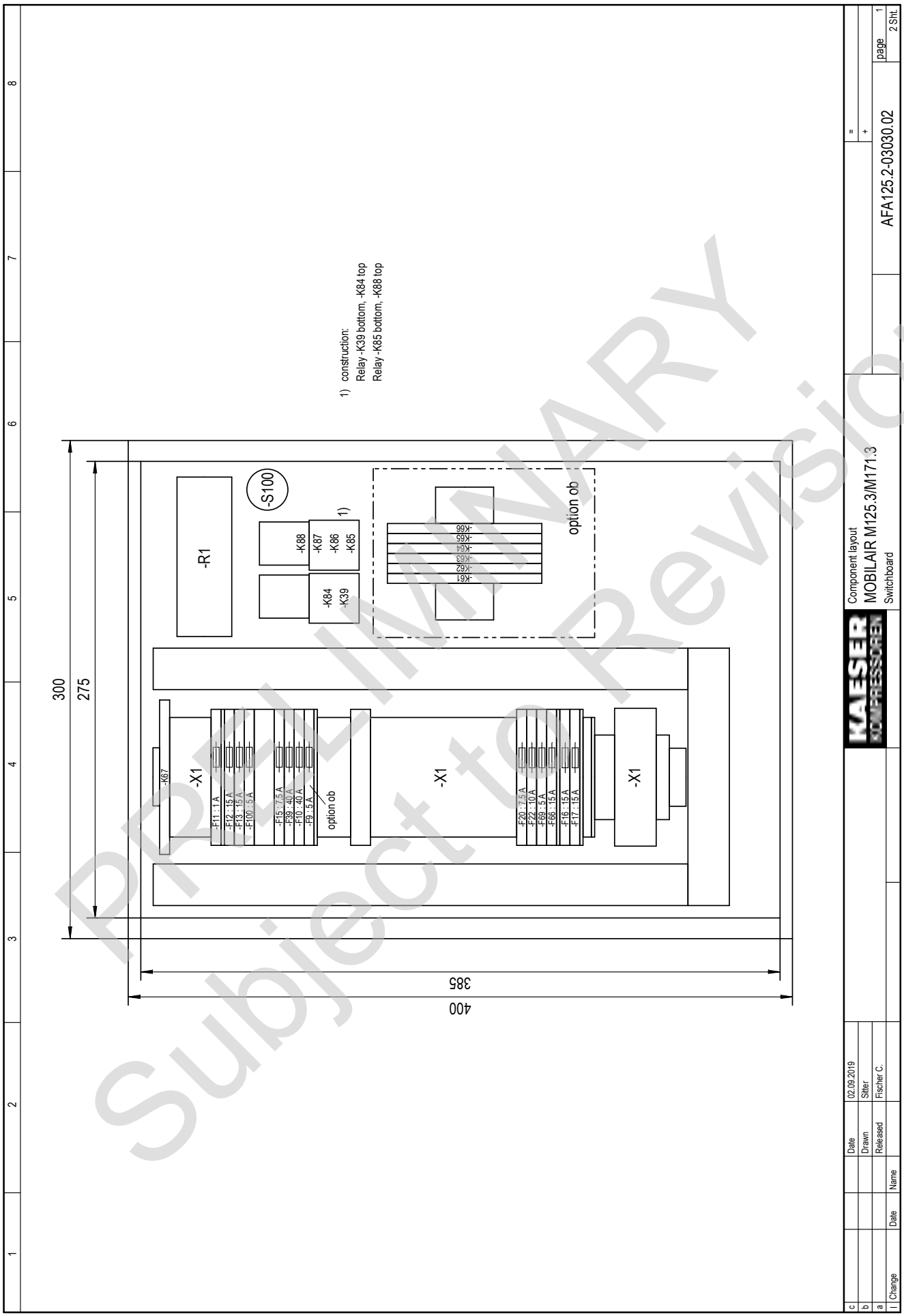
1) construction:
Relay -K39 bottom, -K84 top
Relay -K85 bottom, -K88 top
-R1
-S100
-K88
-K87
-K86
-K85
1)
-K84
-K39
option ob
-K61
-K62
-K63
-K64
-K65
-K66
-K67
-X1
-F11 : 1 A
-F12 : 15 A
-F13 : 15 A
-F100 : 5 A
-F15 : 7.5 A
-F39 : 40 A
-F10 : 40 A
-F9 : 5 A
option ob
-X1
-F20 : 7.5 A
-F22 : 10 A
-F69 : 5 A
-F66 : 15 A
-F16 : 15 A
-F17 : 15 A
-X1
300
275
385
400
KAESER KOMPRESSOREN
Component layout
MOBILAIR M125.3/M171.3
Switchboard
AFA125.2-03030.02
page 1
2 Sht.
Date 02.09.2019
Drawn Sitter
Released Fischer C.
Name
Date
Change
PRELIMINARY
Subject to Revision

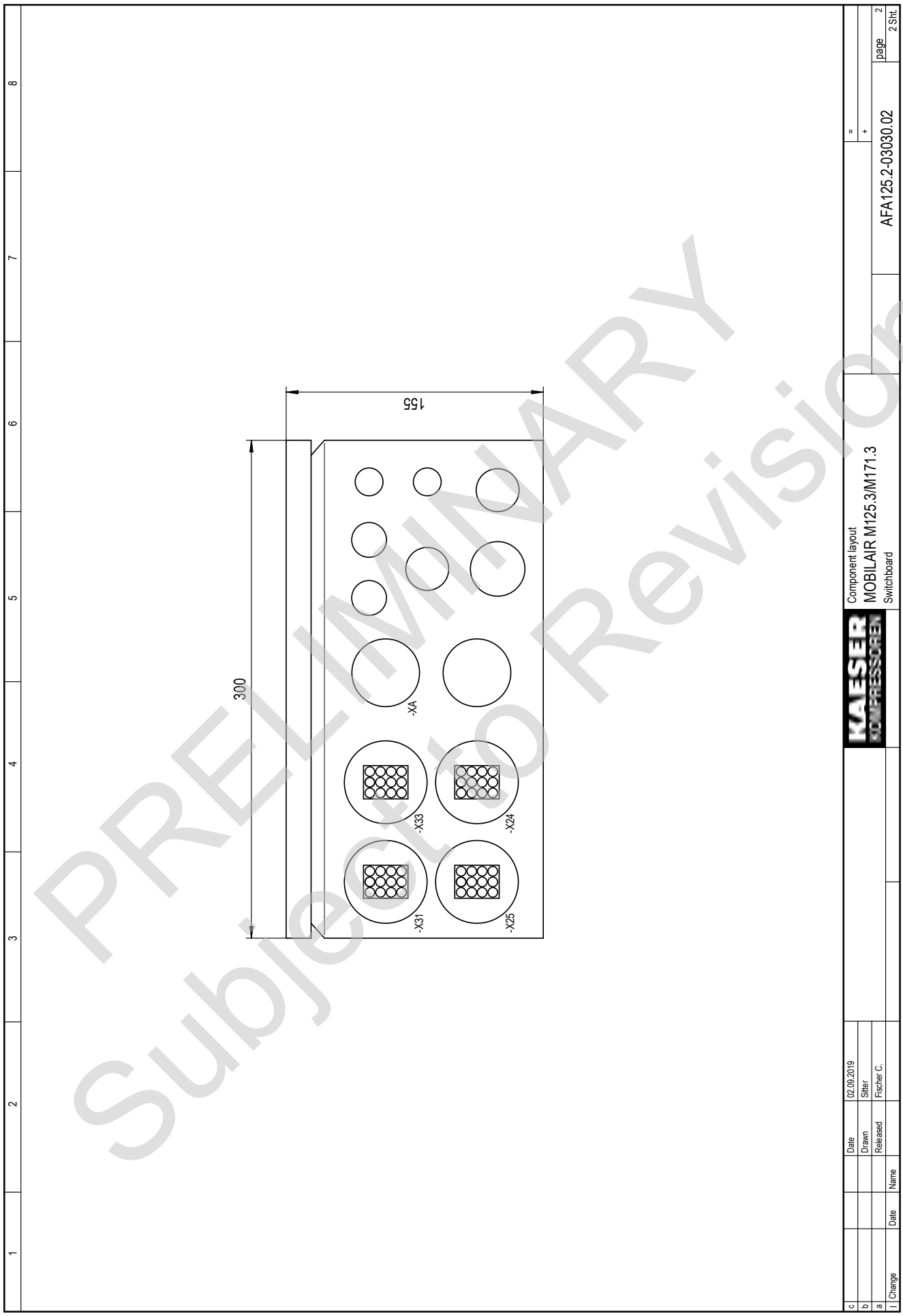

PRELIMINARY
Subject to Revision

13.4.2 Option tc
Lighting and signaling system connection

PRELIMINARY
Subject to Revision

Electrical diagrams
MOBILAIR
Lighting equipment
connection 12V/13-pole

Manufacturer: Kaeser Kompressoren GmbH
Postfach 2143
96410 Coburg

PRELIMINARY
Subject to Revision

The drawings remain our exclusive property. They are entrusted only for the agreed purpose. Copies or any other reproductions, including storage, treatment and dissemination by use of electronic systems must not be made for any other than the agreed purpose. Neither originals nor reproductions must be forwarded or otherwise made accessible to third parties.

c					
b					
a					
D	Änderung	Datum	Name	Norm	
			Datum	02.07.2008	E
			Bearb.	Weid	
			Gepr.	Weid	
			Ersatz durch:		
			Ersatz für:		

KAESER KOMPRESSOREN
Ursprung: AFA02003_01

Cover page
MOBILAIR
Lighting equipment

DFAEUR.BEL-02003.01

Blatt 1
Bl.

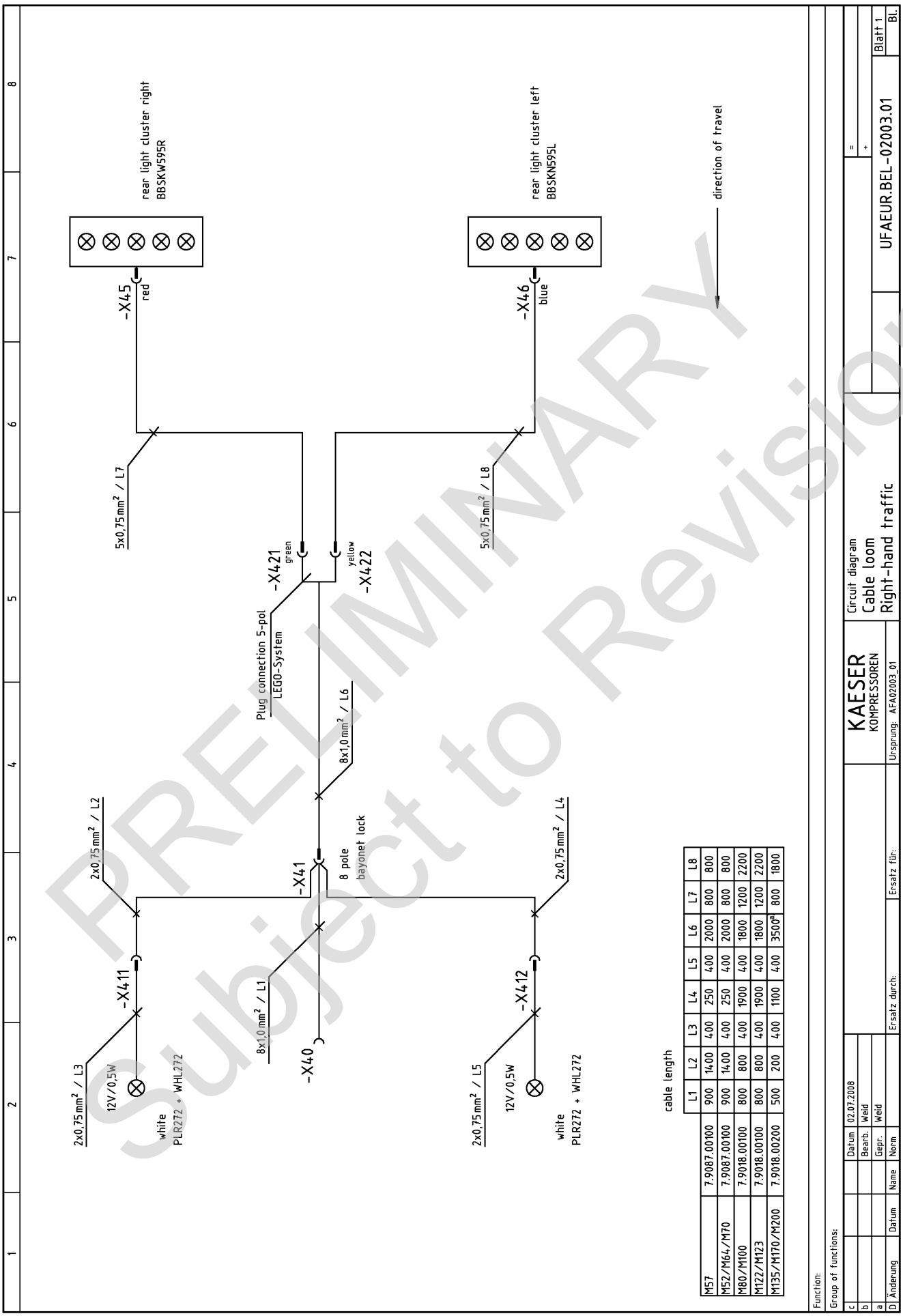

PRELIMINARY
Subject to Revision

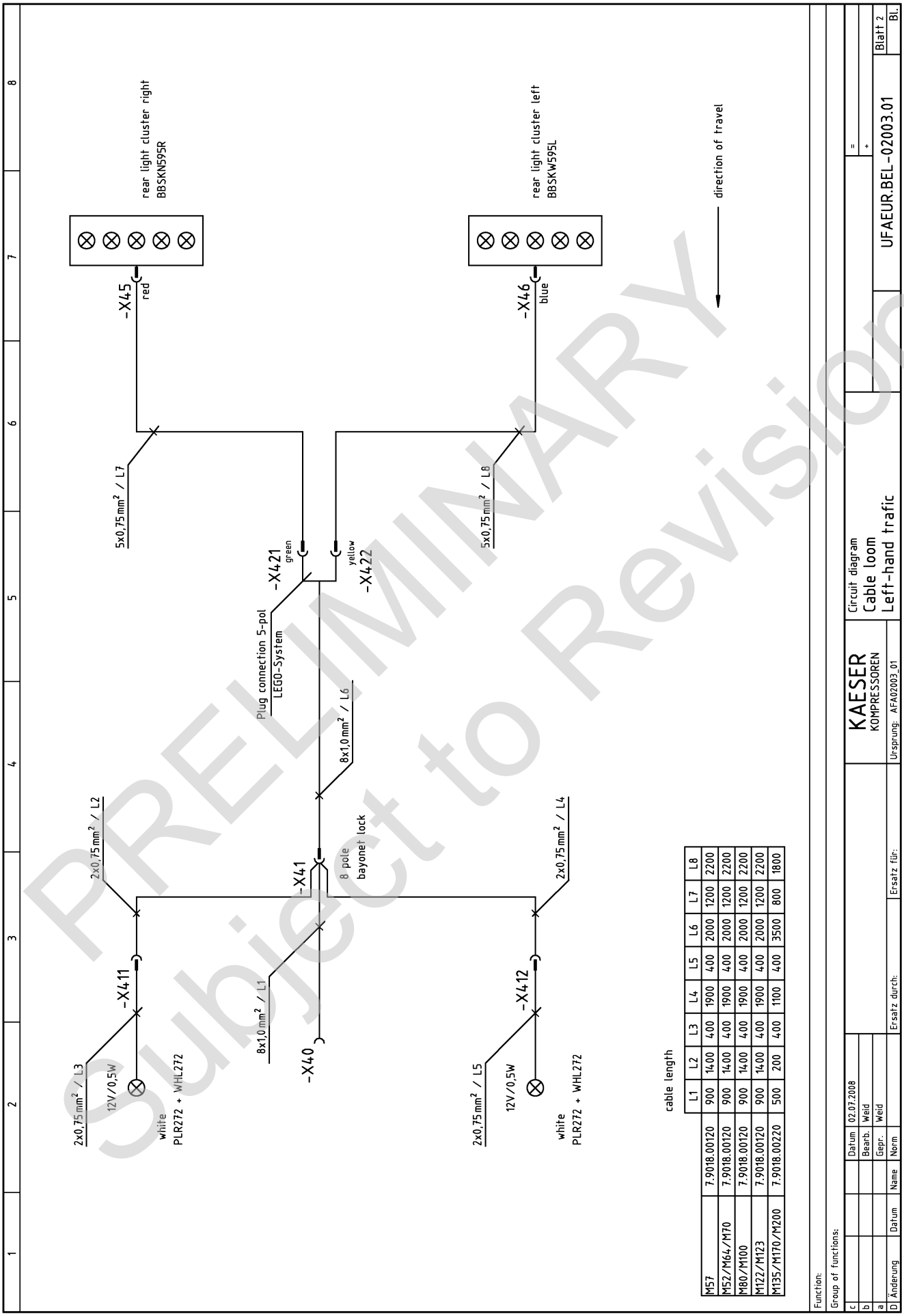

	L1	L2	L3	L4	L5	L6	L7	L8
M57	7.9018.00120	900	1400	400	1900	400	2000	1200	2200
M52/M64/M70	7.9018.00120	900	1400	400	1900	400	2000	1200	2200
M80/M100	7.9018.00120	900	1400	400	1900	400	2000	1200	2200
M122/M123	7.9018.00120	900	1400	400	1900	400	2000	1200	2200
M135/M170/M200	7.9018.00220	500	200	400	1100	400	3500	800	1800

PRELIMINARY
Subject to Revision

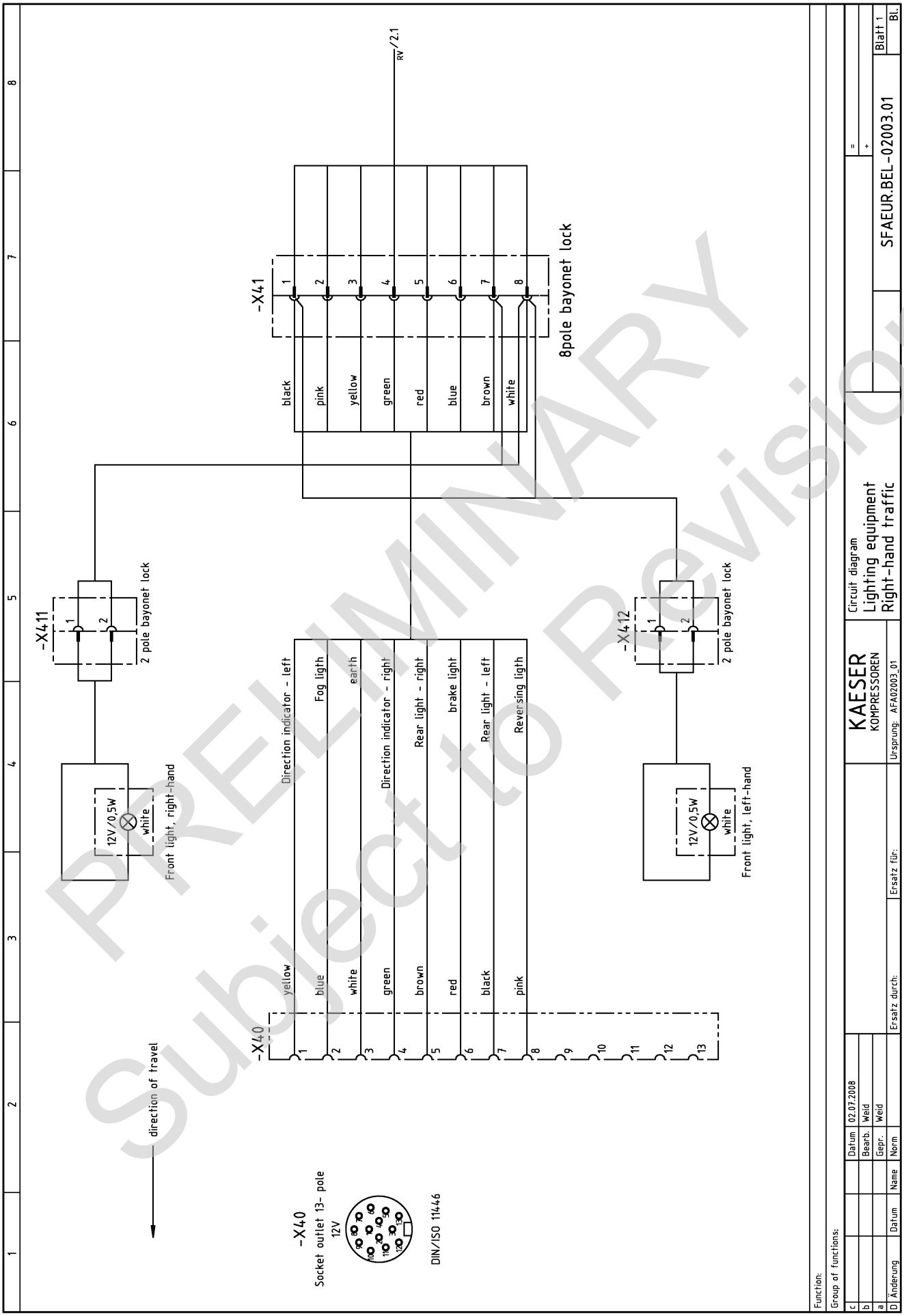

PRELIMINARY
Subject to Revision

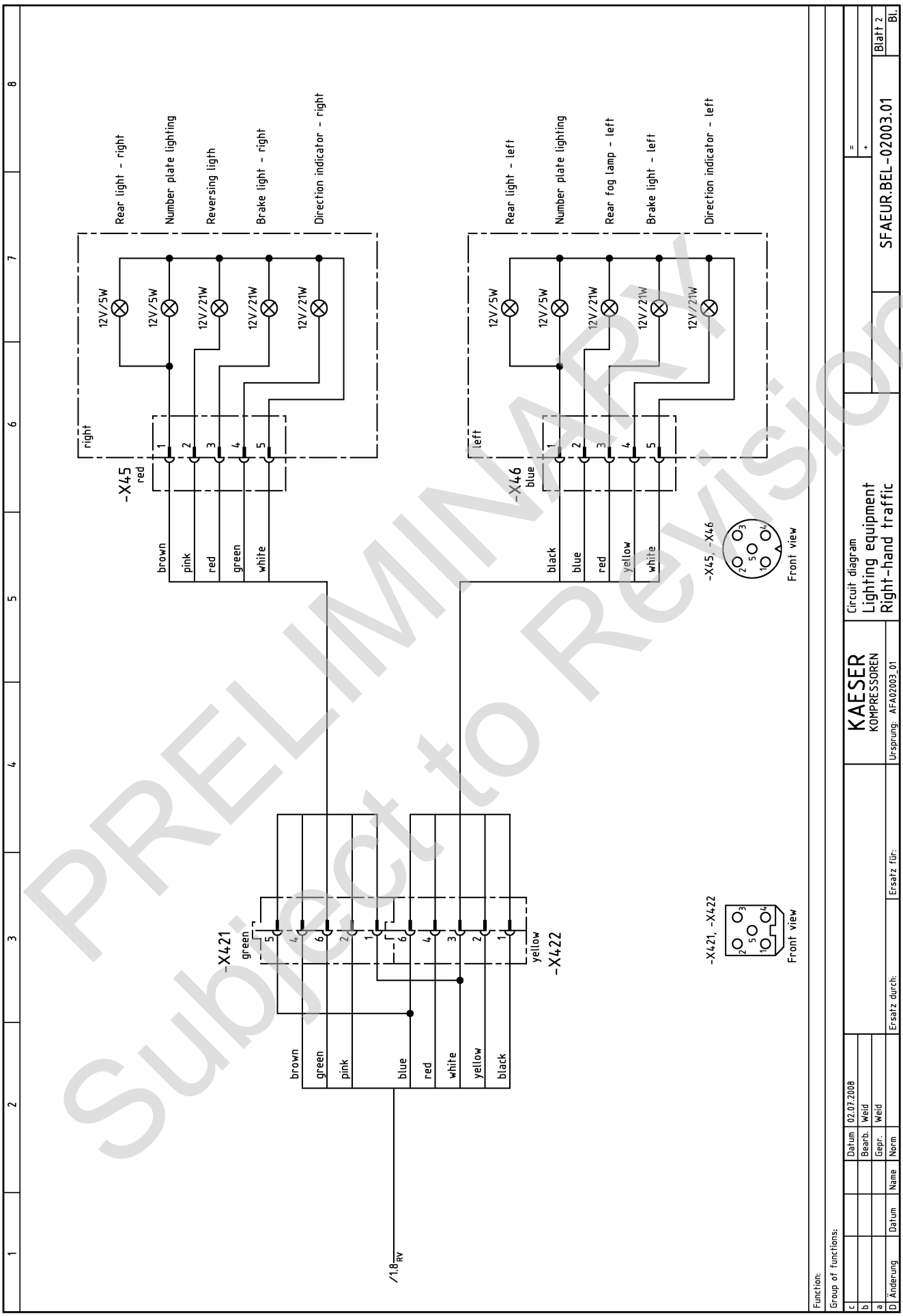

PRELIMINARY
Subject to Revision

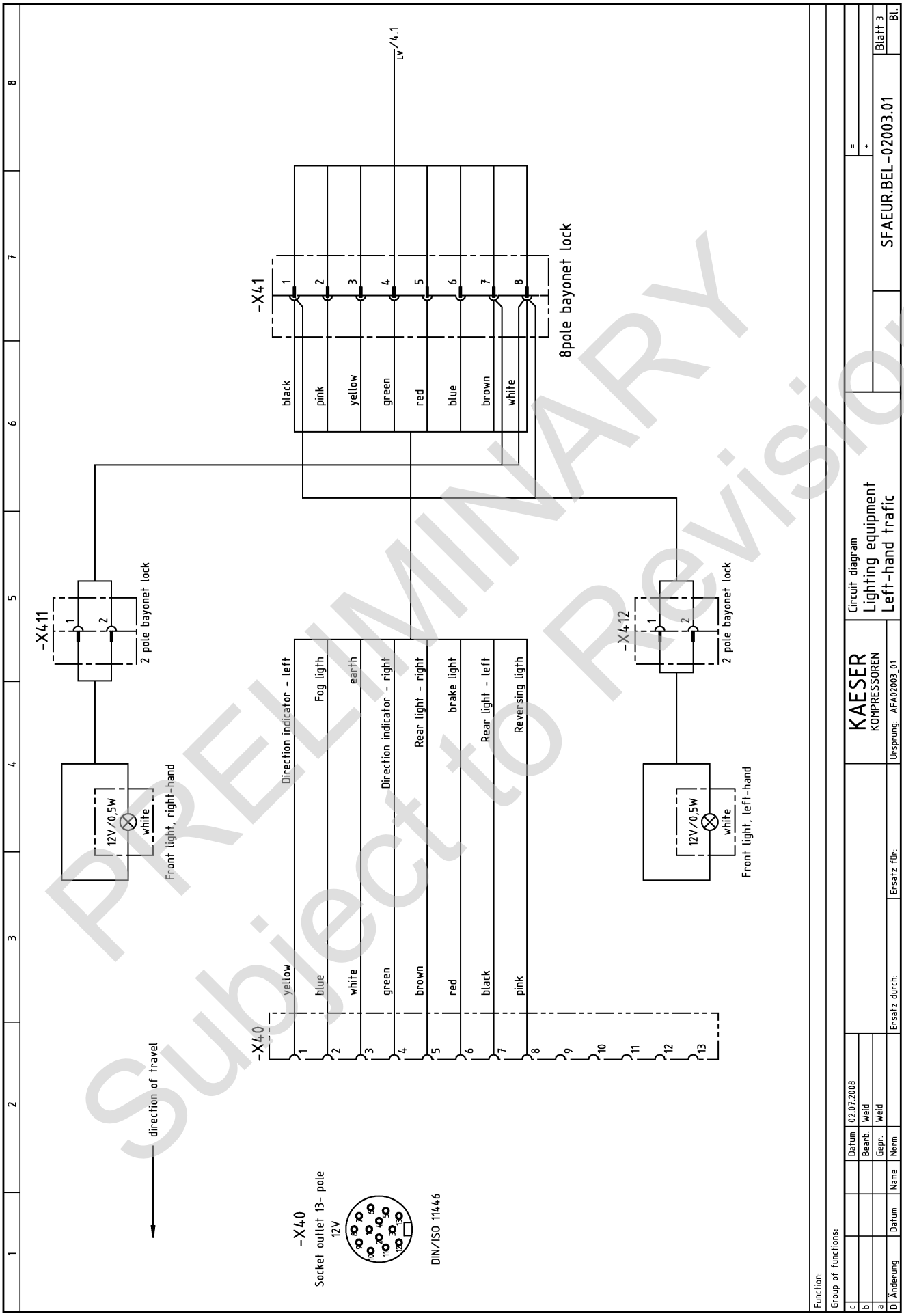

PRELIMINARY
Subject to Revision

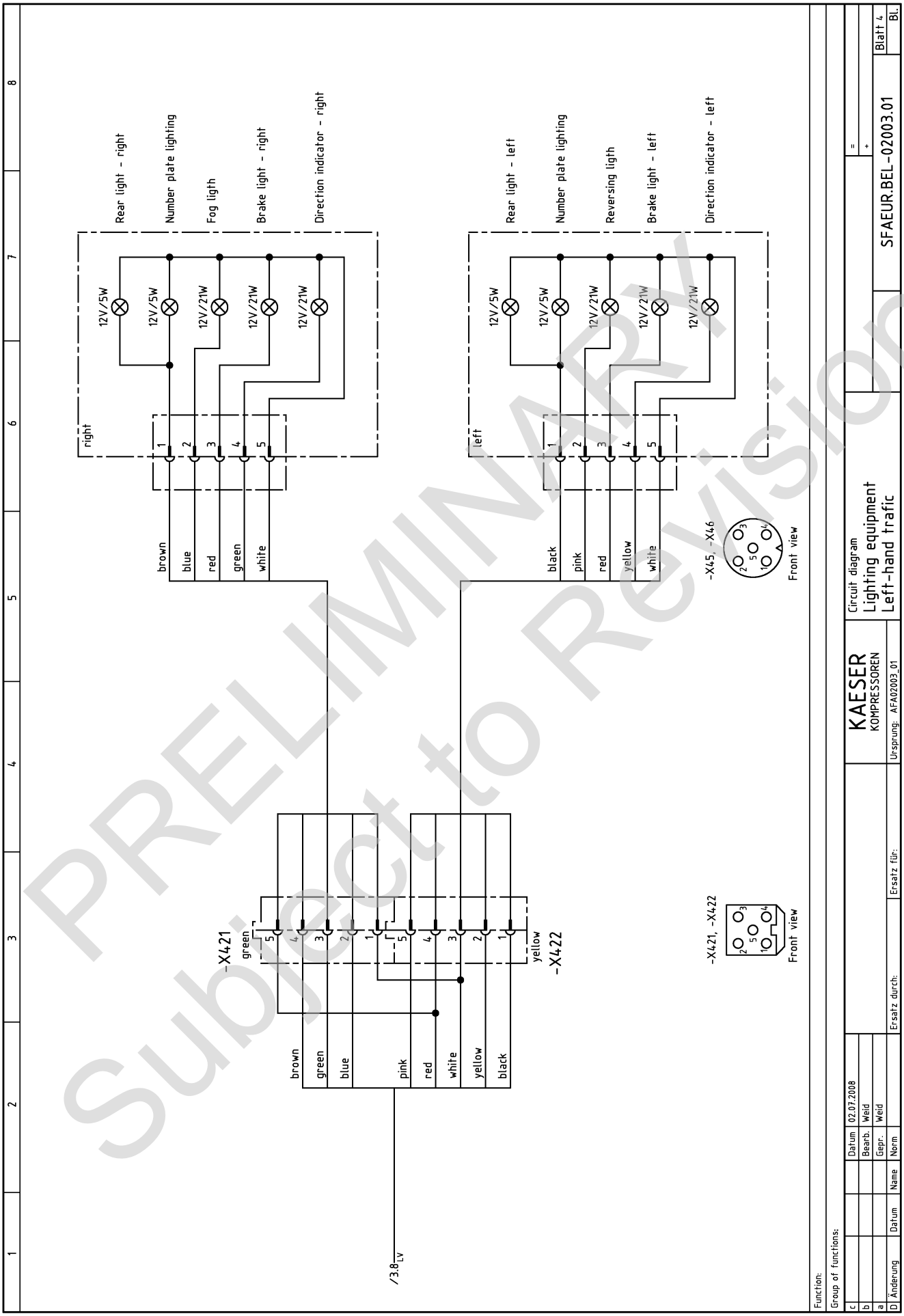

PRELIMINARY
Subject to Revision

13.4.3 Option te
Lighting and signaling system connection

PRELIMINARY
Subject to Revision

Electrical diagrams
MOBILAIR
Lighting equipment
for USA / CAN

Manufacturer: Kaeser Kompressoren GmbH
Postfach 2143
96410 Coburg

PRELIMINARY
Subject to Revision

The drawings remain our exclusive property. They are entrusted only for the agreed purpose. Copies or any other reproductions, including storage, treatment and dissemination by use of electronic systems must not be made for any other than the agreed purpose. Neither originals nor reproductions must be forwarded or otherwise made accessible to third parties.

c					
b					
a					
D	Änderung	Datum	Name	Norm	

Datum	04.07.08	E
Bearb.	Weid	
Gepr.	Weid	

Ersatz durch:
Ersatz für:

KAESER KOMPRESSOREN
Ursprung: AFA00909_00

Cover page
MOBILAIR
Lighting equipment

DFAUSA.BEL-02004.00

Blatt 1
Bl.

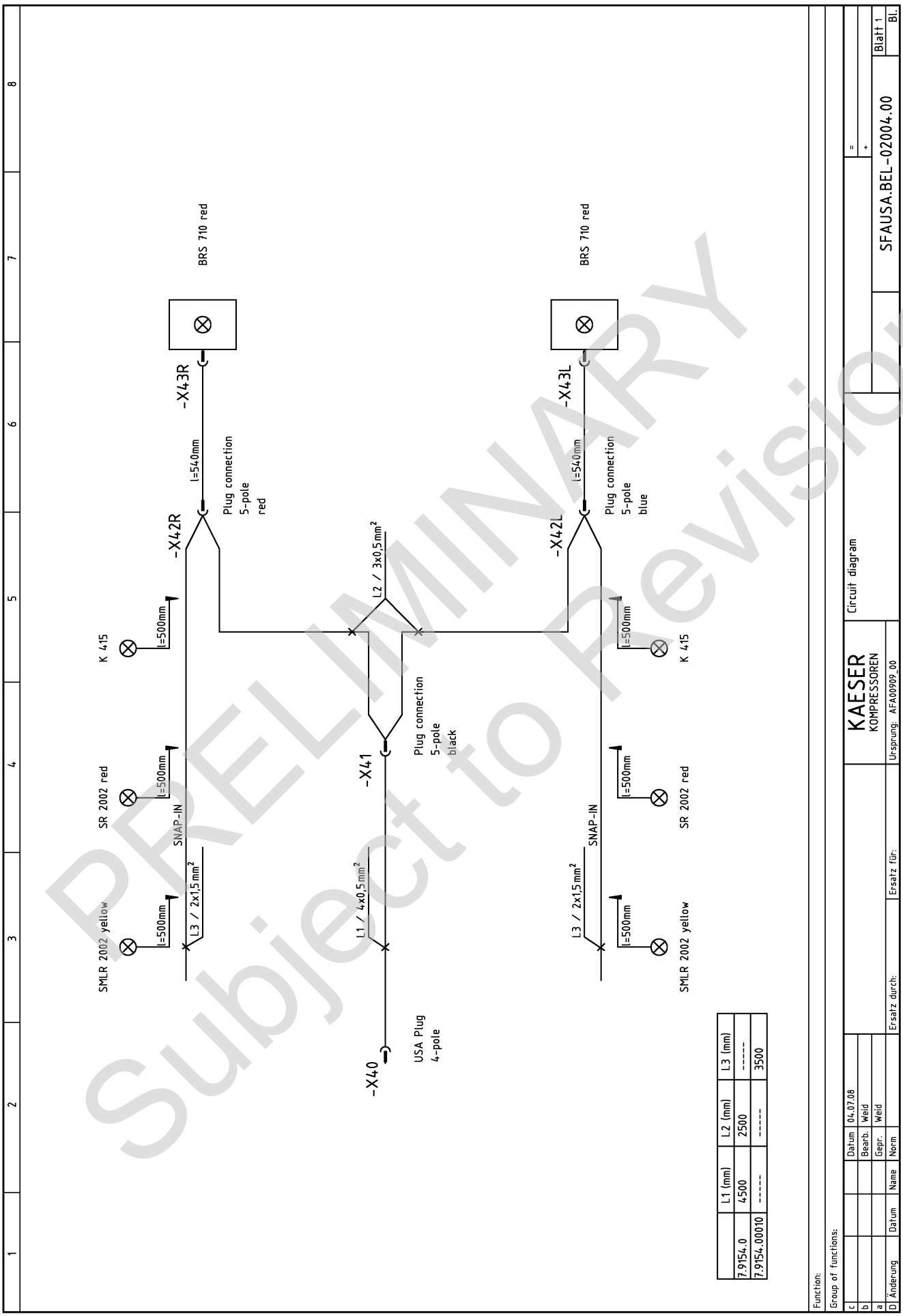

PRELIMINARY
Subject to Revision

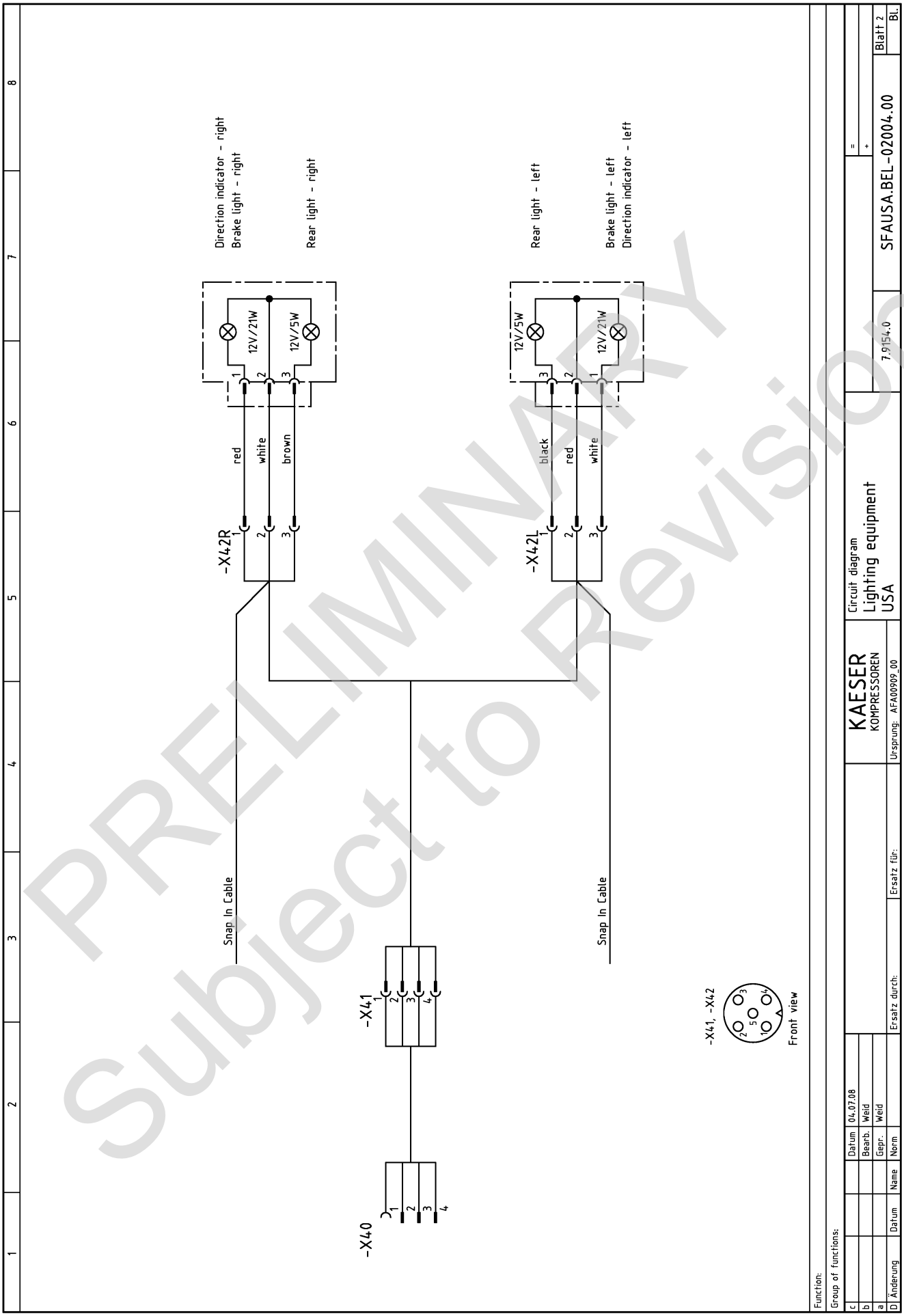

PRELIMINARY
Subject to Revision

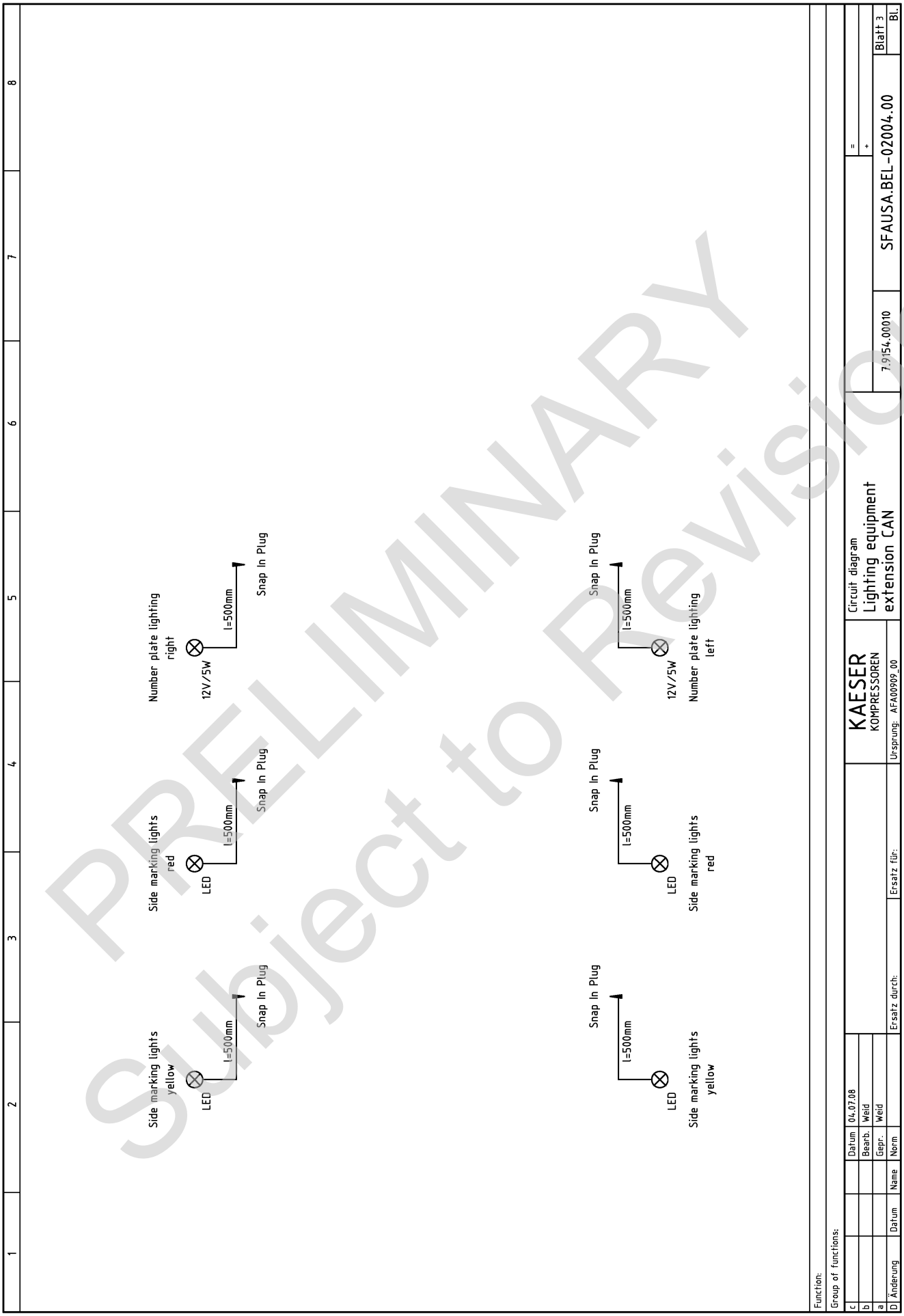

PRELIMINARY
Subject to Revision

13.5 Fuel circulation diagram

PRELIMINARY
Subject to Revision

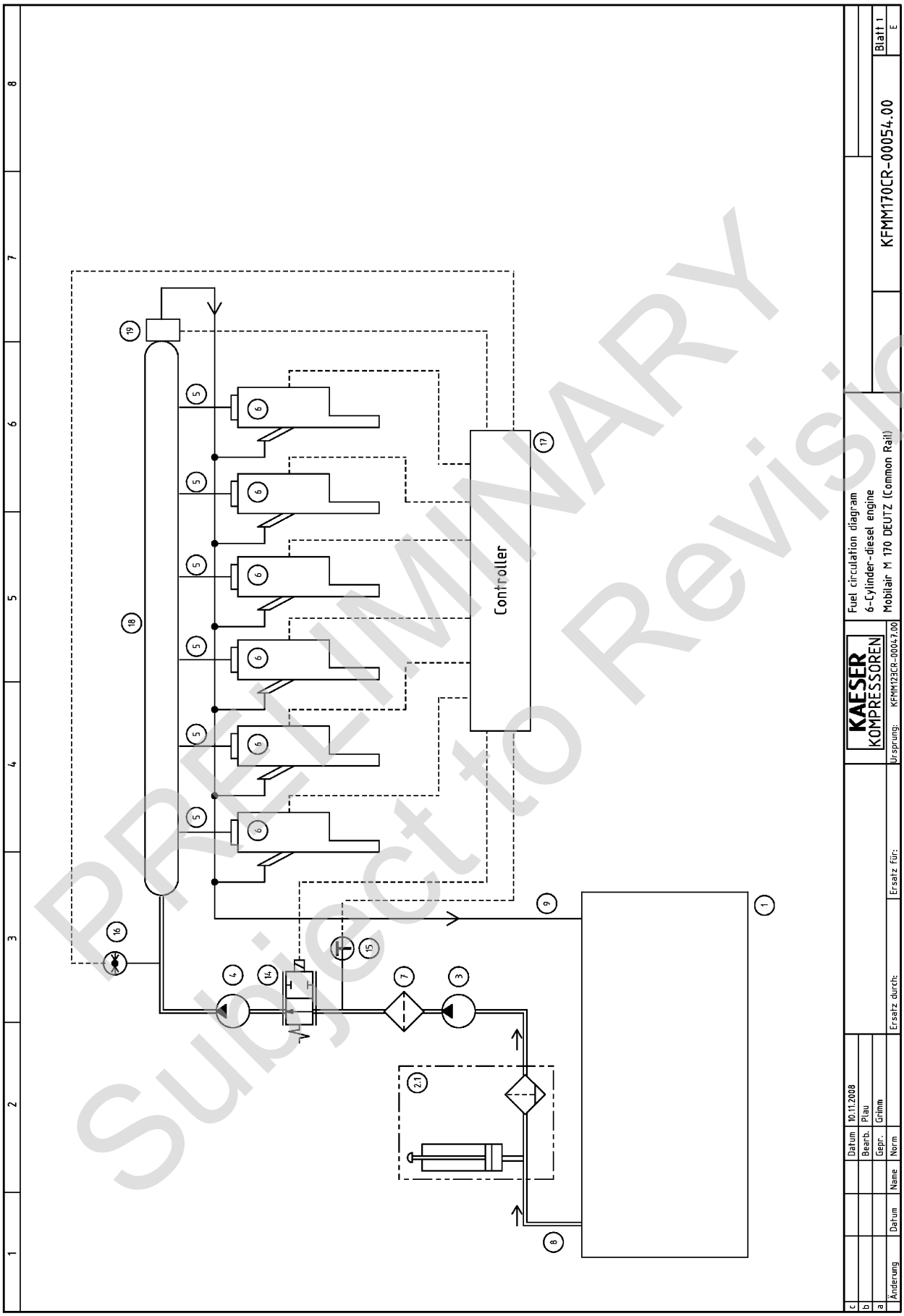

PRELIMINARY
Subject to Revision

1 Fuel tank
2.1 Fuel prefilter with water separator and manual pump
3 Fuel feed pump
4 Injection pump
5 Injection pipe
6 Injection nozzle
7 Fuel filter
8 Fuel supply line
9 Fuel return line
14 Pressure regulating valve
15 Temperature sensor
16 Pressure sensor
17 Electronic control unit
18 Rail
19 Pressure limiting valve

c			
b		Datum	10.11.2008
a		Bearb.	Plau
		Gepr.	Grimm
Änderung	Datum	Name	Norm

Ersatz durch: Ersatz für: Ursprung: KFMM123CR-00047.00

KAESER KOMPRESSOREN

Fuel circulation diagram
6-Cylinder-diesel engine
Mobilair M 170 DEUTZ (Common Rail)

KFMM170CR-00054.00

Blatt 2
E

PRELIMINARY
Subject to Revision

13.6 Option Id
Pipeline and instrument flow diagram (exhaust treatment)

PRELIMINARY
Subject to Revision

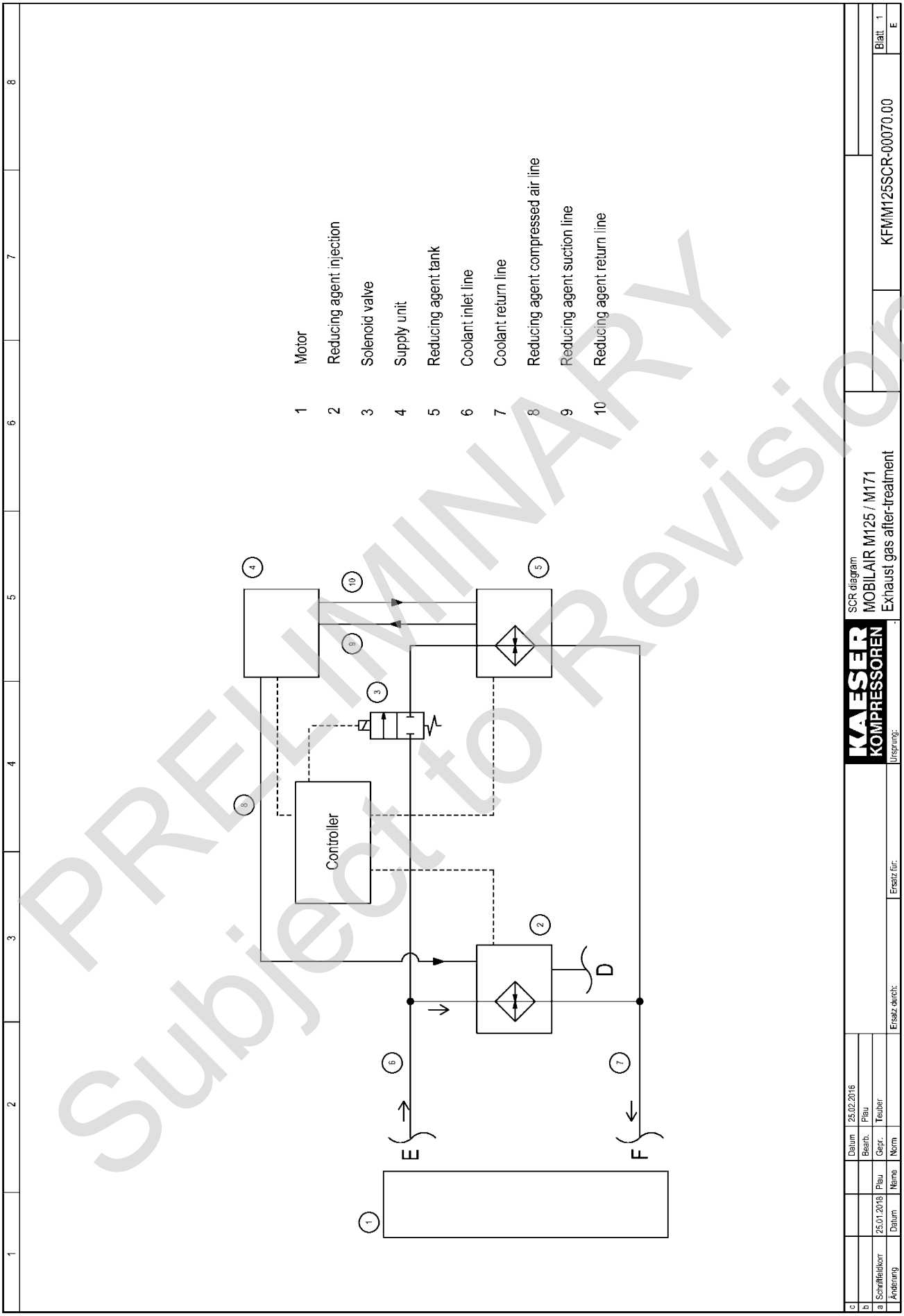

PRELIMINARY
Subject to Revision

13.7 Option dd
Operating instructions for compressed air filter (combination filter)

PRELIMINARY
Subject to Revision

Filters for Compressed Air

005-055 (AO, AA, ACS, AR, AAR)

EN Original Language

NL DE FR FI SV NO DA EL ES PT IT PL
SK CS ET HU LV LT RU SL TR MT RO

aerospace
climate control
electromechanical
filtration
fluid & gas handling
hydraulics
pneumatics
process control
sealing & shielding

Parker

domnick hunter

ENGINEERING YOUR SUCCESS.

FILTER DH-OIL-X EVO AO AA 01-

PRELIMINARY
Subject to Revision

PRELIMINARY
Subject to Revision

FILTER DH-OIL-X EVO AO AA 01-

Warning

- Highlights actions or procedures, which if not performed correctly, may lead to personal injury or death.
- Benadrukt de acties of procedures die, indien niet juist uitgevoerd, lichamelijk letsel of de dood kunnen veroorzaken.
- Weist auf Aktionen oder Verfahren hin, die bei fehlerhafter Durchführung zu Verletzungen und tödlichen Unfällen führen können.
- Met en relief les actions ou procédures qui, si elles ne sont pas exécutées correctement, peuvent entraîner des dommages corporels ou la mort.
- Osoittaa toimenpiteitä tai menettelytapoja, jotka väärin suoritettuina saattavat aiheuttaa henkilövahingon tai kuoleman.
- Anger åtgärder och metoder som kan orsaka personskador eller dödsfall om de inte utförs korrekt.
- Fremhever handlinger eller prosedyrer som kan føre til personskade eller dødsfall hvis de ikke utføres på korrekt måte.
- Fremhæver handlinger eller fremgangsmåder, som kan medføre personskade eller dødsfald, hvis de ikke udføres korrekt.
- Επισημαίνει τις ενέργειες ή τις διαδικασίες, οι οποίες αν δεν πραγματοποιηθούν σωστά, μπορεί να οδηγήσουν σε τραυματισμό προσωπικού ή σε θάνατο
- Destaca acciones o procedimientos que, de no realizarse correctamente, pueden ocasionar daños personales o la muerte.
- Realça as acções ou procedimentos que, se não forem executados correctamente, poderão provocar danos pessoais ou morte.
- Segnala azioni o procedure che, se non eseguite correttamente, comportano il rischio di infortuni o morte.
- Wskazuje działania i procedury, które w razie niewłaściwego wykonania mogą prowadzić do obrażeń ciała lub śmierci.
- Zvýrazňuje činnosti alebo postupy, ktoré môžu v prípade nesprávneho vykonania viesť zraneniu alebo usmrteniu.
- Upozornění na činnosti nebo postupy, jejichž nesprávné provádění může vést ke zranění nebo usmrcení osob.
- Tõstab esile toimingud või protseduurid, mis väära teostamise korral võivad põhjustada kehavigastusi või surma.
- Olyan műveleteket vagy eljárásokat jelöl, amelyek nem megfelelő módon történő végrehajtása súlyos vagy végzetes személyi sérülést okozhat.
- Uzsver darbības vai procedūras, kuru rezultātā, ja tās neveic pareizi, var izraisīt ievainojumus vai nāvi.
- Žymi veiksmus ar procedūras, kuriuos atlikus neteisingai, galima susižeisti ar mirti.
- Указывает на действия, ненадлежащее выполнение которых может привести к нанесению вреда здоровью или смерти
- Označuje dejanja ali postopke, ki lahko ob nepravilnem izvajanju poškodujejo človeka ali povzročijo smrt.
- Doğru bir şekilde yerine getirilmediği takdirde bu ürüne hasar verebilecek işlem ve süreçleri vurgular.
- Tissottolinea l-azzjonijiet jew il-proċeduri, li jekk ma jsirux kif suppost, jista' jkun hemm korriment jew mewt
- Evidențiază acțiuni sau proceduri care, dacă nu sunt corect efectuate, pot duce la leziuni personale sau la deces.

Caution

- Highlights actions or procedures, which if not performed correctly, may lead to damage to this product.
- Benadrukt de acties of procedures die, indien niet juist uitgevoerd, schade kunnen berokkenen aan dit product.
- Weist auf Aktionen oder Verfahren hin, die bei fehlerhafter Durchführung zu Schäden am Gerät führen können.
- Met en relief les actions ou procédures qui, si elles ne sont pas exécutées correctement, peuvent endommager ce produit.
- Osoittaa toimenpiteitä tai menettelytapoja, jotka väärin suoritettuina saattavat vaurioittaa tätä laitetta.
- Anger åtgärder och metoder som kan orsaka skador på den här produkten om de inte utförs korrekt.
- Fremhever handlinger eller prosedyrer som kan føre til skade på produktet hvis de ikke utføres på korrekt måte.
- Fremhæver handlinger eller fremgangsmåder, som kan medføre beskadigelse af dette produkt, hvis de ikke udføres korrekt.
- Επισημαίνει τις ενέργειες ή τις διαδικασίες, οι οποίες αν δεν πραγματοποιηθούν σωστά, μπορεί να προκαλέσουν ζημιά στο προϊόν αυτό
- Destaca acciones o procedimientos que, de no realizarse correctamente, pueden ocasionar el deterioro del producto.
- Realça as acções ou procedimentos que, se não forem executados correctamente, poderão danificar este produto.
- Segnala azioni o procedure che, se non eseguite correttamente, comportano il rischio di danneggiare il prodotto.
- Wskazuje działania i procedury, które w razie niewłaściwego wykonania mogą powodować uszkodzenie produktu.
- Zvýrazňuje činnosti alebo postupy, ktoré v prípade nesprávneho vykonania môžu viesť k poškodeniu tohto výrobku.
- Upozornění na činnosti nebo postupy, jejichž nesprávné provádění může vést k poškození tohoto výrobku.
- Tõstab esile toimingud või protseduurid, mis väära teostamise korral võivad käesolevat toodet kahjustada.
- Olyan műveleteket vagy eljárásokat jelöl, amelyek nem megfelelő módon történő végrehajtása a termék károsodásához vezethet.
- Uzsver darbības vai procedūras, kuru rezultātā, ja tās neveic pareizi, var sabojāt šo izstrādājumu.
- Žymi veiksmus ar procedūras, kuriuos atlikus neteisingai, galima sugadinti šį gaminį.
- Указывает на действия, ненадлежащее выполнение которых может привести к повреждениям данного изделия
- Označuje dejanja ali postopke, ki lahko ob nepravilnem izvajanju poškodujejo izdelek.
- Doğru bir şekilde yerine getirilmediği takdirde yaralanma ya da ölüme yol açabilecek işlem ve süreçleri vurgular
- Tissottolinea l-azzjonijiet jew il-proċeduri, li jekk ma jsirux kif suppost, tista' ssir ħsara lil dan il prodott
- Evidențiază acțiuni sau proceduri care, dacă nu sunt corect efectuate, pot duce la deteriorarea acestui produs.

- Suitable gloves must be worn.
- Geeignete Schutzhandschuhe tragen.
- Käytettävä asianmukaisia käsineitä.
- Bruk egnede hansker.
- Απαιτείται να φοράτε κατάλληλα γάντια
- Devem ser utilizadas luvas adequadas.
- Należy zakładać odpowiednie rękawice
- Kohustuslik kanda sobivaid kaitsekindaid
- Jāvalkā piemēroti cimdi.
- Работы должны проводиться в соответствующих перчатках
- Uygun eldiven giyilmelidir
- Este necesară purtarea unor mănuși adecvate.
- Altijd geschikte handschoenen dragen.
- Le port de gants adaptés est obligatoire.
- Använd lämpliga handskar.
- Der skal anvendes egnede handsker.
- Se deben llevar puestos guantes apropiados.
- Indossare guanti di protezione.
- Je nutné použít vhodné rukavice.
- Viseljen megfelelő védőkesztyűt.
- Reikia mūvėti tinkamas pirštines.
- Uporabiti je treba ustrezne rokavice.
- Ghandhom jintlibsu ingwanti adatti

- Highlights the requirements for disposing of used parts and waste.
- Benadrukt de vereisten voor het weggooien van gebruikte onderdelen en afval.
- Weist auf die Anforderungen zur Entsorgung gebrauchter Teile und Abfall hin.
- Met en relief les consignes de mise au rebut des pièces usagées et des déchets.
- Osoittaa käytettyjen osien ja jätteen hävittämistä koskevia vaatimuksia.
- Anger de krav som ställs på bortskaffande av gamla delar och avfall.
- Fremhever kravene for avhending av brukte deler og avfall.
- Fremhæver kravene til bortskaffelse af udtjente dele og affald.
- Επισημαίνει τις απαιτήσεις απόρριψης των χρησιμοποιημένων εξαρτημάτων και των απορριμμάτων
- Destaca los requisitos para desechar las piezas usadas y los residuos.
- Realça os requisitos para eliminar as peças utilizadas e os desperdícios.
- Segnala i criteri per lo smaltimento di componenti usati e rifiuti.
- Wskazuje wymagania dotyczące usuwania zużytych części i odpadów.
- Zvýrazňuje požiadavky pre zneškodňovanie použitých dielov a odpadu.
- Upozornění na požadavky týkající se likvidace použitých dílů a odpadu.
- Tõstab esile kasutatud osade ja jäätkide utiliseerimisele esitatavad nõuded
- A használt alkatrészek és a hulladék megfelelő módon történő elhelyezésére hívja fel a figyelmet.
- Uzsver prasības tam, kā atbrīvoties no lietotajām detaļām un atkritumiem.
- Žymi panaudotų dalių ir atliekų išmetimo reikalavimus.
- Указывает на требования по уничтожению использованных деталей и отходов
- Označuje zahteve za odlaganje rabljenih delov in odpadkov.
- Kullanılmış parçaların ve atıkların atılmasına ilişkin gereklilikleri vurgular
- Tissottolinea l-kundizzjonijiet biex wieħed jarmi l-partijiet użati u l-iskart
- Evidențiază cerințele pentru depunerea la deșeuri a pieselor uzate și a reziduurilor.

PRELIMINARY Subject to revision

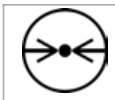

- Pressure.
- Paine.
- Πίεση
- Ciśnienie
- Nyomás alatt.
- Tlak
- Druk
- Tryck
- Presión.
- Tlak..
- Spiediens.
- Basınç
- Druck.
- Trykk
- Pressão.
- Tlak.
- Slėgis.
- Pressjoni
- Pression.
- Tryk
- Pressione.
- Surve.
- Давление
- Presiune.

- Release Pressure.
- Évacuation de pression.
- Avlast trykk
- Despresurizar.
- Ciśnienie spustowe
- Surve väljalase
- Išleiskite slėgį.
- Basıncı Kaldırın
- Druk aflaten.
- Vapauta paine.
- Aflast tryk
- Liberta Pressão.
- Uvoľnite tlak.
- Engedje ki a nyomást.
- Стравить давление
- Neħħi l-pressjoni
- Druck ablassen.
- Tryckutsläpp.
- Εκτόνωση πίεσης
- Scaricare la pressione.
- Uvolnění tlaku.
- Pazeminiet spiedienu.
- Sprostitev tlaka.
- Depresurizare.

- Replace every year
- Remplacer tous les ans.
- Skift ut hvert år
- Sustituir anualmente
- Należy wymieniać raz w roku
- Asendage igal aastal
- Keiskite kartą per metus
- Her yıl değiştirin
- Elk jaar vervangen
- Vaihda vuosittain.
- Udskift en gang om året
- Substituir todos os anos
- Každý rok vymieňajte
- Évente cserélje
- Заменять каждый год.
- Ibdel kull sena
- Jährlich austauschen
- Byt varje år
- Αντικατάσταση κάθε χρόνο
- Sostituire ogni anno
- Nutná výměna každý rok.
- Nomainiet reizi gadā
- Zamenjajte vsako leto.
- Înlocuire anuală

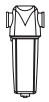

- Filter housing / Model
- Logement du filtre/modèle.
- Filterhus/-modell
- Caja de filtro/modelo.
- Obudowa filtra / model.
- Filtri korpus/mudel
- Filtro korpusas / modelis
- Filtre muhafazası / Model
- Filterhuis / Model
- Suodatinkotelo/-malli
- Filterhus/modell
- Caixa / Modelo do filtro
- Kryt filtra / Model
- Szűrőház / típus
- Корпус фильтра / модель
- Kontenitur tal-filtru - Mudell
- Filtergehäuse / Modell
- Filterhus/modell
- Υποδοχή/μοντέλο φίλτρου
- Corpo del filtro / Modello
- Kryt filtru / Model
- Filtra korpuss / modelis
- Ohišje filtra / Model
- Carcasă filtru / Model

- High efficiency filter element
- Hochleistungsfilterelement
- Tehokas suodatinelementti
- Høyeffektivt filterelement
- Φίλτρο υψηλής απόδοσης
- Elemento do filtro de elevado rendimento
- Wysokowydajny wkład filtra
- Vysoce účinný filtrační prvek
- Nagy hatékonyságú szűrőelem
- Labai efektyvus filtravimo elementas
- Visoko učinkovit filtrirni element
- Element tal-filtru b'effiċjenza kbira
- Zeer efficiënt filterelement
- Cartouche filtrante haute efficacité.
- Högeffektivt filterelement
- Högeffektivt filterelement
- Elemento filtrante de gran eficiencia.
- Elemento filtrante ad alta efficienza
- Vysoko účinný filtračný článok
- Kõrgtootlik filterelement
- Augstas produktivitātes filtra elements
- Высокоэффективный фильтрующий элемент
- Yüksek etkinlikli filtre öğesi
- Element filtrant cu eficientă ridicată

- Ensure correct tool is used
- Zorg dat het juiste gereedschap wordt gebruik
- Vérifier que les outils adéquats sont utilisés.
- Se till att rätt verktyg används.
- Sørg for at benytte korrekt værktøj
- Asegúrese de que se utiliza la herramienta adecuada
- Assicurarsi di utilizzare l'utensile corretto
- Uistite sa, že používate správny nástroj
- Tagage õige tööriista kasutamine
- Izmantojiet tikai atbilstošus darbarīkus
- Убедитесь, что используется правильный инструмент
- Doğru alet kullanılmasını sağlayın
- Stellen Sie sicher, dass Sie das richtige Werkzeug verwenden.
- Käytettävä oikeaa työkalua
- Pass på at korrekt verktøy brukes
- Βεβαιωθείτε ότι χρησιμοποιείται το σωστό εργαλείο
- Certifique-se de que é utilizada a ferramenta correcta
- Należy używać odpowiedniego narzędzia.
- Zkontrolujte použití správného nástroje
- Mindig a célnak megfelelő szerszámot használja
- Įsitikinkite, kad naudojamas reikiamas įrankis
- Poskrbite, da boste uporabili ustrezno orodje
- Kun żgur li tintuża l-ġhodda t-tajba
- Asigurați-vă că este utilizată scula corectă

- Next service date (month/year)
- Nächster Wartungstermin (Monat/Jahr)
- Seuraava huollon päivämäärä (kuukausi/vuosi)
- Neste servicedato (måned/år)
- Επόμενη ημερομηνία σέρβις (μήνας / έτος)
- Data da próxima intervenção técnica (mês / ano)
- Data następnego serwisu (miesiąc/rok)
- Datum příští prohlídky (měsíc / rok)
- Következő szerviz dátuma (hó / év)
- Kitos techninės priežiūros data (ménuo / metai)
- Datum naslednjega servisa (mesec / leto)
- Id-data tas-servis li jmiss (xahar / sena)
- Volgende onderhoudsdatum (maand / jaar)
- Date de la prochaine révision (mois/année)
- Nästa servicedatum (månad/år)
- Næste servicedato (måned/år)
- Fecha de siguiente revisión (mes/año)
- Prossimo intervento di assistenza (mese / anno)
- Dátum nasledujúcej opravy (mesiac/rok)
- Järgmise hoolduse kuupäev (kuu / aasta)
- Nākamais apkopes datums (mēnesis / gads)
- Дата следующего обслуживания (месяц/год)
- Bir sonraki servis tarihi (ay / yıl)
- Data următoarei vizite de service (lună/an

PRELIMINARY
Subject to Revision

Warning!
This product must be installed and maintained by competent and authorised personnel only, under strict observance of these operating instructions, any relevant standards and legal requirements where appropriate.

Retain this user guide for future reference

Waarschuwing!
Dit product mag alleen geïnstalleerd en onderhouden worden door deskundig en bevoegd personeel met strikte inachtneming van deze bedieningsinstructies en de betreffende normen en wettelijke vereisten indien van toepassing.

Bewaar deze handleiding als naslag.

Warnung!
Das Produkt darf ausschließlich von autorisiertem Fachpersonal unter strikter Befolgung dieser Betriebsanleitung, ggf. relevanter Normen sowie gesetzlicher Vorschriften installiert und gewartet werden.

Bewahren Sie die Bedienungsanleitung zu Referenzzwecken auf.

Attention !
Ce produit doit être installé et entretenu exclusivement par un personnel compétent et autorisé, dans le respect le plus strict de ce mode d'emploi et des normes applicables et exigences légales éventuelles.

Conserver ce guide de l'utilisateur à titre de référence future

Varoitus!
Tämän tuotteen saa asentaa ja huoltaa vain pätevä ja valtuutettu henkilöstö, noudattaen tarkasti näitä käyttöohjeita, kaikkia asiaankuuluvia normeja ja tarpeen vaatiessa lain asettamia vaatimuksia.

Säilytä tämä käyttöohje tulevaa tarvetta varten.

Varning!
Produkten får endast installeras och underhållas av utbildad och behörig personal, som följer denna bruksanvisning och eventuella tillämpliga normer och lagföreskrifter noga i förekommande fall.

Behåll denna användarhandbok som referens

Advarsel!
Dette produktet må bare installeres og vedlikeholdes av kompetent og autorisert personale, i streng overholdelse av disse betjeningsanvisningene, alle relevante standarder og rettslige krav der det passer.

Ta vare på denne brukerveiledningen for senere bruk

Advarsel!
Dette produkt må kun installeres og vedligeholdes af autoriseret personale, under nøje overholdelse af disse driftsinstruktioner, relevante standarder og lovgivningsmæssige krav, hvor dette er aktuelt.

Gem denne vejledning til senere reference.

Προειδοποίηση!
Η εγκατάσταση και συντήρηση αυτού του προϊόντος πρέπει να γίνεται μόνο από κατάλληλα εκπαιδευμένο και εξουσιοδοτημένο προσωπικό, με αυστηρή τήρηση των οδηγιών χειρισμού, των εφαρμοζόμενων προτύπων και των νομικών απαιτήσεων όπου απαιτείται.

Φυλάξτε αυτό το εγχειρίδιο χρήσης για μελλοντική αναφορά

Advertencia
La instalación y mantenimiento de este producto debe ser efectuada únicamente por personal competente y autorizado, respetándose de forma estricta estas instrucciones de funcionamiento, así como cualquier norma y requerimiento legal que sean aplicables.

Conserve esta guía del usuario para poder consultarla en el futuro.

Advertência!
A instalação e a manutenção deste produto só deve ser realizada por pessoal autorizado e competente, sob estrita observância destas instruções de utilização e de quaisquer normas e requisitos legais relevantes, quando adequado.

Conserve este guia do utilizador para referência futura

PRELIMINARY
Subject to Revision

Attenzione
L'installazione e la manutenzione del prodotto devono essere affidate a personale competente e autorizzato, nel rigoroso rispetto delle presenti istruzioni di funzionamento, degli standard applicabili e delle normative in vigore, qualora appropriato.

Conservare questa guida utente per consultarla in seguito

Ostrzeżenie!
Instalacja i konserwacja urządzenia muszą być prowadzone przez wykwalifikowany personel, w zgodzie z poniższymi instrukcjami, obowiązującymi standardami i wymogami prawa.

Niniejszą instrukcję należy zachować do późniejszego wykorzystania.

Pozor!
Tento výrobok musí byť nainštalovaný a udržiavaný iba kompetentnou a autorizovanou osobou, pri prísnom dodržiavaní tohto návodu na použitie, príslušných štandardov a zákonných požiadaviek v prípade potreby.

Uschovajte túto užívateľskú príručku pre budúce použitie

Upozornění!
Tento produkt smí instalovat a údržbu smí provádět pouze kompetentní a autorizovaný personál, a to za přísného dodržování tohoto návodu k obsluze, veškerých relevantních norem a zákonných požadavků tam, kde je to nutné.

Tuto uživatelskou příručku uschovejte pro pozdější potřebu.

Hoiatus!
Toote paigaldamine ja hooldamine on lubatud ainult pädeval, vastavate volitustega töötajal, kes tegutseb kasutusjuhendi nõudeid, asjakohaseid standardeid ja kehtivaid eeskirju järgides

Hoidke käesolev kasutusjuhend alal edaspidiseks kasutamiseks

Figyelem!
A terméket csak szakképzett és felhatalmazott személy helyezheti üzembe és tarthatja karban, a kezelési utasítások, a vonatkozó szabványok és jogi előírások szigorú betartása mellett, ahol azok alkalmazhatóak.

A leírást tartsa mindig elérhető helyen

Brīdinājums!
Iekārtas uzstādīšanu un apkopi drīkst veikt tikai kompetents un pilnvarots personāls, stingri ievērojot lietošanas instrukciju un citus saistītus standartus un likumdošanā noteiktās prasības, kad nepieciešams.

Saglabājiet šo lietotāja rokasgrāmatu turpmākām uzziņām

Įspėjimas!
Montuoti ir prižiūrėti šį gaminį gali tik kompetentingi ir įgalioti darbuotojai, griežtai laikydamiesi šių naudojimo instrukcijų, visų atitinkamų standartų bei teisinių reikalavimų, jei tai yra taikytina.

Pasilikite šį vartotojo vadovą, jame esančios informacijos gali prireikti vėliau

Предупреждение!
Установку и техническое обслуживание данного оборудования разрешается выполнять только специалисту, имеющему допуск к выполнению таких работ, при строгом соблюдении данной инструкции по эксплуатации, соответствующих стандартов и применимых нормативных актов.

Сохраните это руководство пользователя, чтобы обращаться к нему в дальнейшем

Opozorilo!
Izdelek lahko namestijo in vzdržujejo le usposobljeni in pooblaščeni delavci, ki morajo pri tem strogo upoštevati navodila za uporabo, vse standarde in zakonske zahteve, ki veljajo za posamezno situacijo.

Shranite ta navodila za uporabo za v prihodnje

Dikkat!
Bu ürün yalnızca yetkili ve kalifiye personel tarafından monte edilmeli ve bakımı yapılmalıdır. Kullanım talimatına, ilgili standartlara ve yasal şartlara harfiyen uyulmalıdır.

Bu kullanım kılavuzunu ileride başvurmak için saklayın.

Twissija!
Dan il-prodott ghandu jiġi installat u jinghata l-manutenzjoni minn personal kompetenti u awtorizzat biss, taħt sorveljanza stretta ta' dawn l-istruzzjonijiet tat-tħaddim, u kwalunkwe standards u ħtiġijiet legali rilevanti fejn hu xieraq.

Erfa' din il-gwida biex tikkonsultaha fil-futur.

Vertizare!
Acest produs trebuie instalat și întreținut numai de către personal competent și autorizat, cu respectarea strictă a acestor instrucțiuni de utilizare, a tuturor standardelor relevante și a cerințelor legale, unde este cazul.

Păstrați acest ghid al utilizatorului pentru consultări ulterioare

PRELIMINARY
Subject to Revision

Index

• **Index** • Stichwortverzeichnis • **Index** • Sisältö • **Index** • Innholdsfortegnelse • **Indeks** • Ευρετήριο • **Índice** • Índice • **Indice** • Skorowidz • Obsah • Rejstřík • Register • Index • Saturs • Turinys • Указатель • Kazalo • **Dizin** • Indiċi • **Index**

1. Technical Specification

• **Technische specificaties** • **Technische Angaben** • **Caractéristiques techniques** • **Tekniset tiedot** • **Tekniska specifikationer** • **Tekniske spesifikasjoner** • **Tekniske specifikationer** • **Τεχνικές προδιαγραφές** • **Especificaciones técnicas** • **Especificações Técnicas** • **Caratteristiche tecniche** • Dane techniczne • Technická špecifikácia • Technická specifikace • Tehnilised andmed • Műszaki adatok • Tehniskā specifikācija • Techninė specifikacija • Технические характеристики • Tehnične specifikacije • **Teknik Spesifikasyon** • Speċifikazzjoni Teknika • **Specificație tehnică**

2. Installation Recommendations

• **Installatie** • Installation • **Installation** • Asennus • **Installation** • Innstallasjon • **Installation** • Εγκατάσταση • **Instalación** • Instalação • **Installazione** • Zalecenia dotyczące instalacji • Odporúčania ohľadom inštalácie • Doporučení ohledně instalace • Paigaldussoovitused • Telepítési követelmények • Ieteikumi uzstādīšanai • Montavimo rekomendacijos • Рекомендации по установке • Priporočila za namestitev • **Kurma Konusunda Tavsiyeler** • Rakkomandazzjonijiet ġhall-Installazzjoni • **Recomandări de instalare**

3. Startup and Operation

• **Starten en bediening** • Start und Betrieb • **Démarrage et exploitation** • Käynnistys ja toiminta • **Start och drift** • Oppstart og betjening • **Start og drift** • Έναρξη λειτουργίας και χειρισμός • **Puesta en marcha y funcionamiento** • Arranque e Operação • **Avvio e funzionamento** • Uruchomienie i eksploatacja • Spustenie a prevádzka • Spuštění a provoz • Käikulaskmine ja töötamine • Beindítás és üzemeltetés • Darbības uzsākšana un darbība • Paleidimas ir naudojimas • Запуск и эксплуатация • Zagon in uporaba • **Çalıştırma ve İşletme** • Kif Tixghel u Kif Thaddem • **Pornire și funcționare**

4. Accessories

• **Toebehoren** • Zubehör • **Accessoires** • Lisävarusteet • **Tillbehör** Tilbehør • **Tilbehør** • Εξαρτήματα • **Accesorios** • Acessórios • **Accessori** • Wyposażenie • Príslušenstvo • Příslušenství • Tarvikud • Tartozékok • Piederumi • Priedai • Принадлежности • Dodatna oprema • **Aksesuarlar** • Aċċessorji • **Accesorii**

5. Spare Parts (Service Kits)

• **Reserve-onderdelen (servicekits)** • Ersatzteile (Service-Kits) • **Pièces de rechange (nécessaires d'entretien)** • Varaosat (Huoltopakkaukset) • **Reservdelar (servicesatser)** • Reservedeler (service-sett) • **Reservedele (Servicekit)** • Ανταλλακτικά (Πακέτα τεχνικής υποστήριξης) • **Piezas de repuesto (kits de mantenimiento)** • Peças Sobressalentes (Kit de Reparação) • **Ricambi (kit per l'assistenza)** • Części zamienne (zestawy serwisowe) • Náhradné diely (Servisná súprava) • Náhradní díly (Sady pro údržbu) • Varuosad (hooldekomplektid) • Pótalkatrészek (szervizkészletek) • Rezerves daļas (apkopes komplekti) • Atsarginės dalys (priežiros detalių komplektai) • Запасные части (ЗИП) • Nadomestni deli (servisni kompleti) • **Yedek parça (Servis kitleri)** • Partijiet Ghat-Tibdil (Kitts tas-Servizz) • **Piese de schimb (Truse de service)**

6. Maintenance

• **Onderhoud** • Wartung • **Entretien** • Kunnossapito • **Underhåll** • Vedlikehold • **Vedligeholdelse** • Συντήρηση • **Mantenimiento** • Manutenção • **Manutenzione** • Konserwacja • Údržba • Údržb • Hooldus • Karbantartás • Tehniskā apkope • Techninė priežiūra • Обслуживание • Vzdrževanja • **Bakım** • Manutenzjoni • **Întreținere**

PRELIMINARY Subject to Revision

	Model	BSPT/NPT Port Size	Flow Rate	Dimensions	Weight	Operating Parameters	Filter Grade	Filter Models	Max Operating Pressure	Max Operating Temperature	Min Operating Temperature
EN	Model	BSPT/NPT poortafmeting	Stroom snelheid	Afmetingen	Gewicht	Bedrijfs parameters	Filter kwaliteitsgraad	Filter modellen	Maximale bedrijfs druk	Maximale bedrijfs temperatuur	Minimale bedrijfs temperatuur
NL	Model	BSPT/NPT Anschlussgröße	Durchfluss-rate	Abmessungen	Gewicht	Betriebsparameter	Filterklasse	Filtermodell	Max. Betriebs-druck	Max. Betriebstemperatur	Min. Betriebstem peratur
DE	Modèle	Taille du port BSPT/NPT	Débit	Dimensions	Poids	Paramètres de fonctionnement	Grade de filtres	Modèles de filtres	Pression de fonctionnement max.	Température de fonctionnement max.	Température de fonctionnement min.
FR	Malli	BSPT NPT-portin koko	Virtaus-nopeus	Mitat	Paino	Käyttö-parametrit	Suodatin-luokka	Suodatin-mallit	Suurin käyttö-paine	Suurin käyttö-lämpötila	Pienin käyttö-lämpötila
F	Modell	BSPT NPT-öppningsstorlek	Flödes-hastighet	Mått	Vikt	Drifts-parametrar	Filter-klass	Filter-modeller	Högsta drifts-tryck	Högsta drifts-temperatur	Lägsta drifts-temperatur
SV	Modell	BSPT NPT-Portstørrelse	Strømnings-hastighet	Mål	Vekt	Drifts-parametere	Filter-type	Filter-modeller:	Maks. drifts-trykk	Maks. drifts-temperatur	Min.drifts-temperatur
NO	Model	BSPT NPT-portstørrelse	Flow-hastighed	Mål	Vægt	Drifts-parametre	Filter-kvalitet	Filter-modeller	Maks. drifts-tryk	Maks. drifts-temperatur	Min.drifts-temperatur
DA	Μοντέλο	Μέγεθος θύρας BSPT/NPT	Ρυθμός παροχής	Διαστάσεις	Βάρος	Παράμετροι λειτουργίας	Κατηγορία φίλτρου	Μοντέλα φίλτρων	Μέγ. πίεση λειτουργίας	Μέγ. θερμοκρασία λειτουργίας	Ελάχ. θερμοκρασία λειτουργίας
EL	Modelo	Tamaño de puerto BSPT/NPT	Caudal	Dimensiones	Peso	Parámetros de funcionamiento	Grado del filtro	Modelos de filtros	Presión de funcionamiento máxima	Temperatura de funcionamiento máxima	Temperatura de funcionamiento mínima
ES	Modelo	Tamanho da Porta BSPT NPT	Taxa de Fluxo	Dimensões	Peso	Parâmetros de Funcionamento	Grau do Filtro	Modelos do Filtro	Pressão Máx. de Funcionamento	Temperatura Máxima de Funcionamento	Temperatura Mínima de Funcionamento
PT	Modello	Dimensioni collega-mento BSPT/NPT	Portata	Dimensioni	Peso	Parametri di esercizio	Grado di filtrazione	Filtri	Pressione di esercizio massima	Temperatura di esercizio massima	Temperatura di esercizio minima
T	Model	Wielkość otworu BSPT/NPT	Prędkość przepływu	Wymiary	Ciężar	Parametry pracy	Klasa filtra	Typy filtrów	Maks. ciśnienie robocze	Maks. temperatura pracy	Min. temperatura pracy
PL	Model	BSPT/NPT Velkosť portu	Prietoková rýchlosť Rate	Rozmery	Hmotnosť	Prevádzkové parametre	Trieda filtra	Typy filtrov	Max. prevádzkový tlak	Max. prevádzková teplota	Min. prevádzková teplota
SK	Model	Velikost závitu BSPT/NPT	Rychlost průtoku	Rozměry	Hmotnost	Provozní parametry	Klasifikace filtru	Modely filtru	Maximální provozní tlak	Maximální provozní teplota	Minimální provozní teplota
CS	Mudel	BSPT/NPT pordi suurus	Voolukulu	Mõõtmed	Kaal	Talitusparameetrid	Filtratsiooniaste	Filtri mudelid	Maksimaalne töösurve	Maksimaalne töötemperatuur	Minimaalne töötemperatuur
ET	Típus	BSPT/NPT Csőcsonk mérete	Áramlási sebesség	Méretek	Tömeg	Üzemi paraméterek	Szűrő fokozat	Szűrő típusa	Max. üzemi nyomás	Max. üzemi hőmérséklet	Min. Üzemi hőmérséklet
HU	Modelis	BSPT/NPT porta lielums	Plūsmas ātrums	Izmēri	Svars	Darbības parametri	Filtru kategorija	Filtru modeļi	Maks. darbības spiediens	Maks. darbības temperatūra	Min. darbības temperatūra
LV	Modelis	BSPT/NPT Prievado dydis	Srauto tėkmgreitisės	Matmenys	Svoris	Darbiniai parametrai	Filtro klasė	Filtro modeliai	Maks. darbinis slėgis	Maks. darbinė temperatūra	Min. darbinė temperatūra
LT	Модель	Диаметр отверстия BSPT/NPT	Скорпотока	Габариты	Вес	Рабочие параметры	Качество фильтра	Модели фильтров	Макс. рабочее давление	Макс. рабочая температура	Мин. рабочая температура
RU	Model	Velikost vrat BSPT/NPT	Hitrost pretoka	Mere	Teža	Delovni parametri	Razred filtra	Modeli filtrov	Maks. delovni tlak	Maks. delovna temperatura	Min. delovna temperatura
SL	Model	BSPT/NPT Port Boyu	Akım Hızı	Boyutlar	Ağırlık	İşletim Parametreleri	Filtre Derecesi	Filtre Modelleri	Azami İşletme Basıncı	Azami İşletme Isısı	Asgari İşletme Isısı
TR	Mudell	Daqs tal-Port BSPT/NPT	Rata tal-Fluss	Dimensjonijiet	Piż	Parametri ta l-Operar	Grad tal-Filtru	Mudelli tal-Filtru	Pressjoni Massima ta' l-Operar	Temperatura Massima ta' l-Operar	Temperatura Minima ta' l-Operar
MT	Mode	Dimensiune port BSPT/NP	Debi	Dimensiun	Greutat	Parametri de funcționar	Gradul filtrului	Modele de filtr	Presiune maximă de funcționar	Temperatură maximă de funcționar	Temperatură minimă de funcționar
RO											

PRELIMINARY Subject to Revision

1. Technical Specification

• Technische specificaties • Technische Angaben • Caractéristiques techniques • Tekniset tiedot • Tekniska specifikationer
• Tekniske spesifikasjoner • Tekniske specifikationer • Τεχνικές προδιαγραφές • Especificaciones técnicas • Especificações Técnicas
• Caratteristiche tecniche • Dane techniczne • Technická špecifikácia • Technická specifikace • Tehnilised andmed • Műszaki adatok
• Tehniskā specifikācija • Techninė specifikacija • Технические характеристики • Tehnične specifikacije • Teknik Spesifikasyon
• Speċifikazzjoni Teknika • **Specificație tehnică**

Model	Pipe Size	L/s	m³/min	m³/hr	cfm
005A	¼"	6	0.4	22	13
005B	⅜"	6	0.4	22	13
005C	½"	6	0.4	22	13
010A	¼"	10	0.6	36	21
010B	⅜"	10	0.6	36	21
010C	½"	10	0.6	36	21
015B	⅜"	20	1.2	72	42
015C	½"	20	1.2	72	42
020C	½"	30	1.8	108	64
020D	¾"	30	1.8	108	64
020E	1"	30	1.8	108	64
025D	¾"	60	3.6	216	127
025E	1"	60	3.6	216	127
030E	1"	110	6.6	396	233
030F	1¼"	110	6.6	396	233
030G	1½"	110	6.6	396	233
035F	1¼"	160	9.6	576	339
035G	1½"	160	9.6	576	339
040G	1½"	220	13.2	792	466
040H	2"	220	13.2	792	466
045H	2"	330	19.8	1188	699
050I	2½"	430	25.9	1548	911
050J	3"	430	25.9	1548	911
055I	2½"	620	37.3	2232	1314
055J	3"	620	37.3	2232	1314

BSPT / NPT

AA005A □ FX

- B = BSPT
- N = NPT

Filter Grade	Models	Max Operating Pressure		Max Recommended Operating Temperature		Min Recommended Operating Temperature	
		bar g	psi g				
AO	005□□F□-055□□F□	16	232	80ºC	176ºF	1.5ºC	35ºF
AO	005□□M□-055□□M□	20	290	100ºC	212ºF	1.5ºC	35ºF
AA	005□□F□-055□□F□	16	232	80ºC	176ºF	1.5ºC	35ºF
AA	005□□M□-055□□M□	20	290	100ºC	212ºF	1.5ºC	35ºF
AR	005□□M□-055□□M□	20	290	100ºC	212ºF	1.5ºC	35ºF
AAR	005□□M□-055□□M□	20	290	100ºC	212ºF	1.5ºC	35ºF
ACS	005□□M□-055□□M□	20	290	50ºC	122ºF	1.5ºC	35ºF

PRELIMINARY Subject to Revision

Weights and Dimensions

• Gewichten en afmetingen • Gewicht und Abmessungen • Poids et dimensions • Painot ja mitat • Vikter och mått • Vekt og dimensjone • Vægt og mål • VΨgt og m¨l • Pesos y dimensiones • Pesos e Dimensões • Pesi e dimensioni • Ciężary i wymiary • Hmotnosti a rozmery • Hmotnost arozměry • Kaalud ja mõõtmed • Tömeg és méretek • Svars un izmēri • Svoris ir matmenys • Вес игабариты • Teže in mere • Ağırlıklar ve Boyutlar • Pižijiet u Dimensjonijiet • **Greutăţi şi dimensiuni**

Model	Pipe Size	A		B		C		D		Weight	
		mm	ins	mm	ins	mm	ins	mm	ins	kg	lbs
005A	¼"	76	3	154.5	6.1	126.5	5	40	1.58	0.5	1.1
005B	⅜	76	3	154.5	6.1	126.5	5	40	1.58	0.5	1.1
005C	½"	76	3	154.5	6.1	126.5	5	40	1.58	0.5	1.1
010A	¼"	76	3	181.5	7.2	153	6	40	1.58	0.6	1.3
010B	⅜	76	3	181.5	7.2	153	6	40	1.58	0.6	1.3
010C	½"	76	3	181.5	7.2	153	6	40	1.58	0.6	1.3
015B	⅜ "	97.5	3.8	235	9.3	201	7.9	50	1.97	1.1	2.4
015C	½"	97.5	3.8	235	9.3	201	7.9	50	1.97	1.1	2.4
020C	½"	97.5	3.8	235	9.3	201	7.9	50	1.97	1.1	2.4
020D	¾"	97.5	3.8	235	9.3	201	7.9	50	1.97	1.1	2.4
020E	1"	97.5	3.8	235	9.3	201	7.9	50	1.97	1.1	2.4
025D	¾"	129	5.1	275	10.8	232.5	9.2	70	2.76	2.2	2.5
025E	1"	129	5.1	275	10.8	232.5	9.2	70	2.76	2.2	2.5
030E	1"	129	5.1	364.5	14.3	322	12.7	70	2.76	2.7	2.9
030F	1¼"	129	5.1	364.5	14.3	322	12.7	70	2.76	2.7	2.9
030G	1½"	129	5.1	364.5	14.3	322	12.7	70	2.76	2.7	2.9
035F	1¼"	170	6.7	432.5	17	382.5	15.1	100	3.94	5.1	11.2
035G	1½"	170	6.7	432.5	17	382.5	15.1	100	3.94	5.1	11.2
040G	1½"	170	6.7	524.5	20.6	474.5	18.7	100	3.94	7	12.5
040H	2"	170	6.7	524.5	20.6	474.5	18.7	100	3.94	7	12.5
045H	2"	170	6.7	524.5	20.6	474.5	18.7	100	3.94	7	12.5
050I	2½"	205	8.1	641.5	25.3	581.5	22.9	120	4.72	11.1	24.4
050J	3"	205	8.1	641.5	25.3	581.5	22.9	120	4.72	11.1	24.4
055I	2½"	205	8.1	832	32.8	772	30.4	120	4.72	13.9	30.6
055J	3"	205	8.1	832	32.8	772	30.4	120	4.72	13.9	30.6

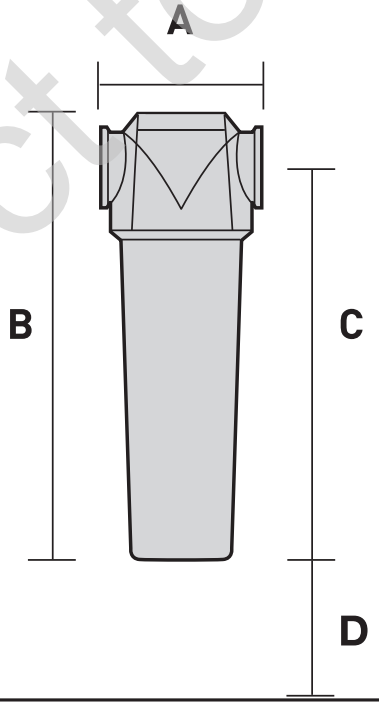

PRELIMINARY
Subject to Revision

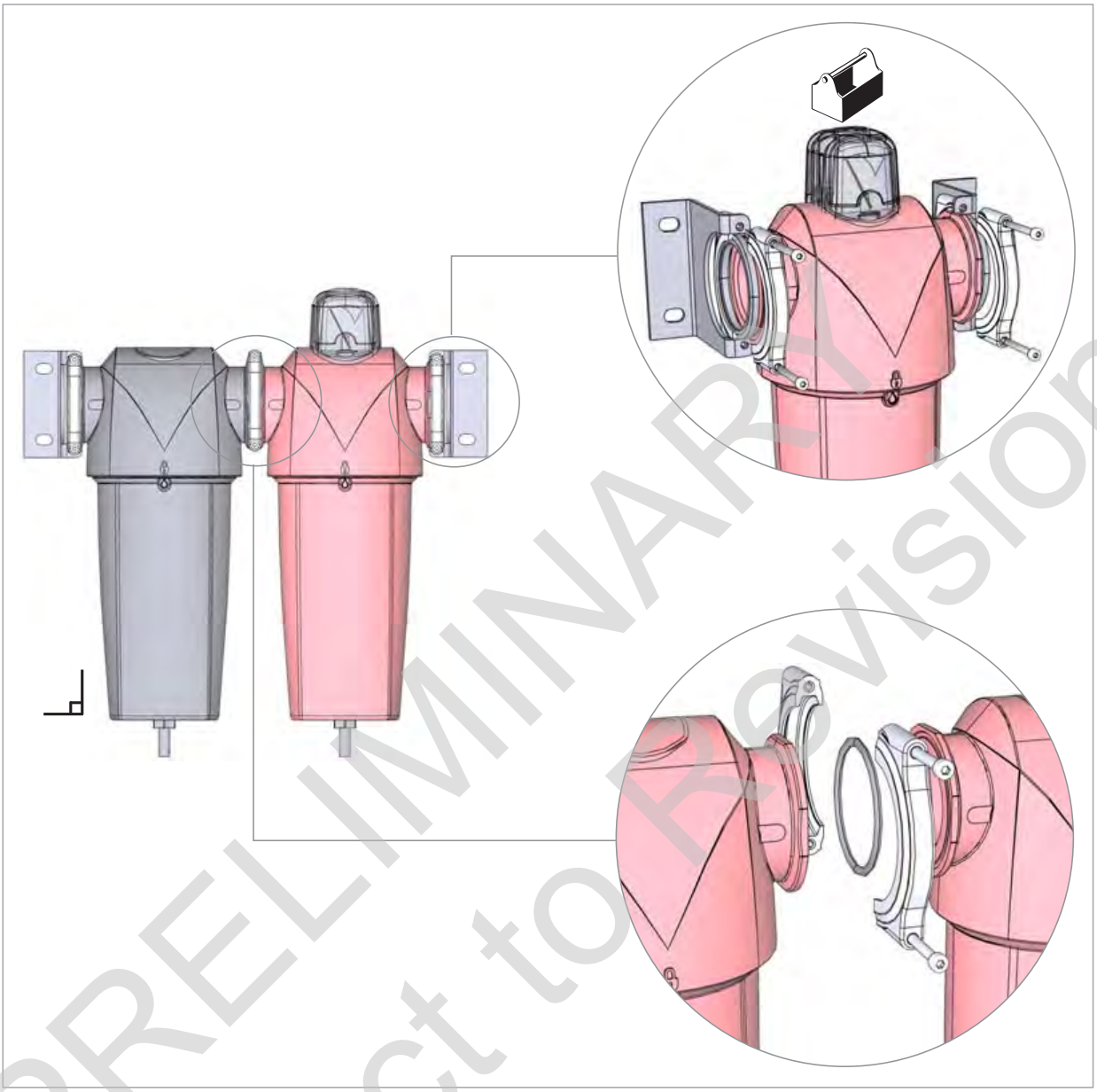

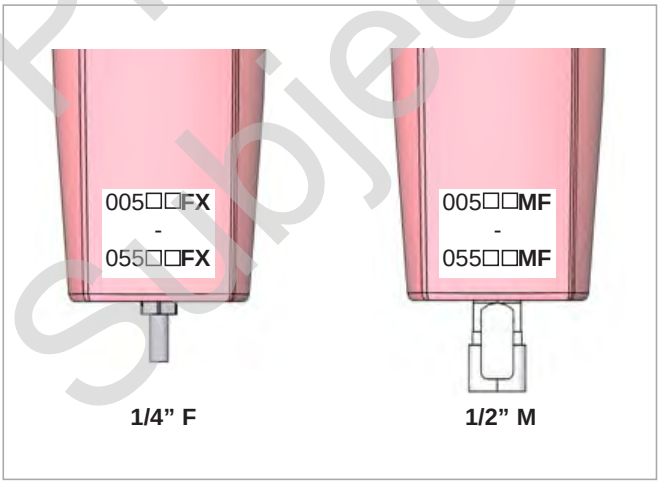

PRELIMINARY
Subject to Revision

21

FILTER DH-OIL-X EVO AO AA 01-

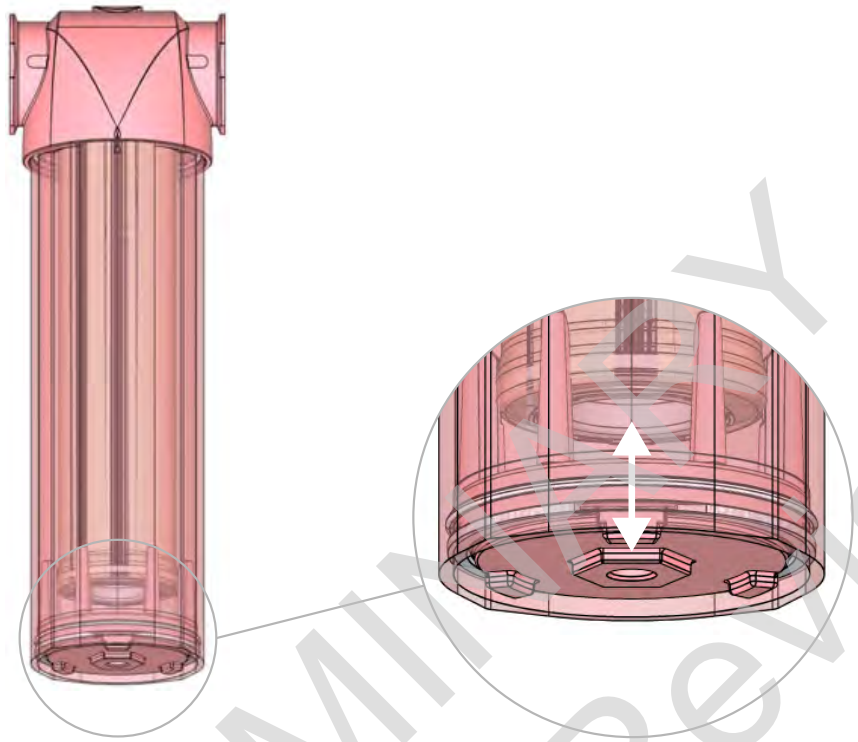

050 & 055

EN The lower closure plate may move when the filter is not pressurised.

NL Het onderste sluitplaatje zou kunnen bewegen wanneer het filter niet onder druk staat.

DE Die untere Verschlussplatte kann sich bewegen, wenn der Filter nicht mit Druck beaufschlagt ist.

FR La plaque d'obturation la plus basse peut bouger si le filtre n'est pas pressurisé.

FI Alempi sulkulevy saattaa liikkua, kun suodatin ei ole paineistettu.

SV Den lägre slutningsplattan kan rubbas när filtret inte är trycksatt.

NO Den nedre trykkplaten kan bevege seg når filteret ikke er trykksatt.

DA Den nedre lukkeplade kan bevæge sig, når filtret ikke sættes under tryk.

EL Η κάτω πλάκα κλεισίματος μπορεί να μετακινηθεί εάν το φίλτρο δεν βρίσκεται υπό πίεση.

ES La placa inferior de cierre puede moverse si el filtro no está presurizado.

PT A placa de isolamento inferior pode deslocar-se se o filtro não estiver pressurizado.

IT Quando il filtro non è sotto pressione, la piastra di chiusura inferiore potrebbe spostarsi.

PRELIMINARY Subject to Revision

PL Pokrywa dolna może się przesuwać, gdy filtr nie będzie pod ciśnieniem.

SK Ak filter nie je natlakovaný, spodná uzatváracia platňa sa môže posunúť.

CS Spodní uzavírací deska se může pohybovat, pokud je filtr pod tlakem.

ET Alumine sulgurplaat võib liikuda, kui filter ei ole rõhu all.

HU Az alsó zárólemez elmozdulhat, ha a szűrő nincs nyomás alatt.

LV Apakšējā noslēgplāksne var kustēties, ja filtrs nav zem spiediena.

LT Jeigu filtre nėra slėgio, apatinė uždaromoji plokštė gali judėti.

RU Если фильтр не загерметизирован, возможно смещение нижней замыкающей пластины.

SL Spodnja plošča za zapiranje se lahko premika, ko filter ni pod pritiskom.

TR Filtreye basınç uygulanmadığında alt kapama levhası hareket edebilir.

MT L-aċċessorji ġżandhom ikunu mqabbdin ma' l-ert - art

RO Placa inferioară de acoperire se poate deplasa atunci când filtrul nu este presurizat

PRELIMINARY
Subject to Revision

3. Startup and Operation

• **Starten en bediening** • Start und Betrieb • **Démarrage et exploitation** • Käynnistys ja toiminta • **Start och drift** • Oppstart og betjening • **Start og drift** • Έναρξη λειτουργίας και χειρισμός • **Puesta en marcha y funcionamiento** • Arranque e Operação • **Avvio e funzionamento** • Uruchomienie i eksploatacja • Spustenie a prevádzka • Spuštění a provoz • Käikulaskmine ja töötamine • Beindítás és üzemeltetés • Darbības uzsākšana un darbība • Paleidimas ir naudojimas • Запуск и эксплуатация • Zagon in uporaba • **Çalıştırma ve İşletme** • Kif Tixghel u Kif Thaddem

EN

1. Open inlet valve slowly to gradually pressurise the unit.

2. Open outlet valve slowly to re-pressurise the downstream piping

Do not open inlet or outlet valves rapidly or subject unit to excessive pressure differential or damage may occur.

NL

1. Doe de inlaatklep langzaam open om het toestel geleidelijk onder druk te zetten.

2. Doe de uitlaatklep langzaam open om de leidingen verderop in het systeem opnieuw onder druk te zetten.

De inlaat- en uitlaatkleppen niet snel openen en het toestel niet aan een te groot drukdifferentieel blootstellen om schade te voorkomen.

DE

1. Einlassventil langsam öffnen, damit Einheit allmählich mit Druck beaufschlagt wird.

2. Auslassventil langsam öffnen, damit nachgeschaltete Rohrleitungen erneut mit Druck beaufschlagt werden.

Einlass- und Auslassventil nicht schnell öffnen. Einheit nicht extremen Druckunterschieden aussetzen. Gefahr von Schäden.

FR

1. Ouvrez lentement la soupape d'admission pour mettre progressivement l'unité sous pression.

2. Ouvrez lentement la soupape de refoulement pour faire remonter la pression des conduits en aval.

Évitez d'ouvrir la soupape d'admission ou la soupape de refoulement trop rapidement ou de soumettre l'unité à une pression différentielle trop importante au risque d'entraîner des dommages.

FI

1. Paineista yksikkö asteittain avaamalla tuloventtiili.

2. Paineista laskuputkisto uudelleen avaamalla lähtöventtiili hitaasti

Älä avaa tulo- tai lähtöventtiiliä nopeasti tai altista yksikköä liialliselle paine-erolle, sillä yksikkö voi vaurioitua.

SV

1. Öppna inloppsventilen långsamt så att enheten trycksätts gradvis.

2. Öppna utloppsventilen långsamt för att trycksätta rören nedströms på nytt.

Öppna inte inlopps- eller utloppsventilerna snabbt och utsätt inte enheten för överdrivet differentialtryck, eftersom det kan orsaka skador.

NO

1. Åpne inntaksventilen langsomt for å sette enheten gradvis under trykk.

2. Åpne uttaksventilen langsomt for å sette nedstrømsrørene under trykk igjen.

Ikke åpne inntaks- eller uttaksventilene rast eller utsett enheten for høyt differensialtrykk, da dette kan føre til skade.

DA

1. Åbn langsomt indgangsventilen for gradvist at sætte enheden under tryk.

2. Åbn langsomt udløbsventilen for at sætte rørene længere fremme under tryk igen.

Åbn ikke indgangs- eller udgangsventiler hurtigt, og udsæt ikke enheden for store trykforskelle, da det kan medføre skader.

PRELIMINARY Subject to Revision

EL

1. Ανοίξτε αργά τη βαλβίδα εισαγωγής για να ανέβει σταδιακά η πίεση της μονάδας.

2. Ανοίξτε αργά τη βαλβίδα εξαγωγής για να ανέβει η πίεση της σωλήνωσης κατάντι

Μην ανοίγετε γρήγορα τις βαλβίδες εισαγωγής ή εξαγωγής και μην υποβάλλετε τη μονάδα σε υπερβολική διαφορική πίεση, διότι μπορεί να προκύψει βλάβη.

ES

1. Abra lentamente la válvula de admisión para presurizar progresivamente la unidad.

2. Abra lentamente la válvula de descarga para volver a presurizar las tuberías aguas abajo.

Para evitar daños, no abra bruscamente las válvulas de admisión o de descarga ni someta la unidad a una diferencia de presiones excesiva.

PT

1. Abra lentamente a válvula de entrada para pressurizar gradualmente a unidade.

2. Abra lentamente a válvula de saída para pressurizar novamente a tubagem a jusante

Não abra rapidamente as válvulas de entrada ou saída nem sujeite a unidade a uma pressão diferencial excessiva, caso contrário poderão ocorrer danos.

IT

1. Aprire lentamente la valvola di mandata per aumentare gradualmente la pressione nell'unità.

2. Aprire lentamente la valvola di scarico per pressurizzare i tubi a valle

Non aprire rapidamente le valvole di mandata o scarico o sottoporre l'unità a una differenza di pressione eccessiva; rischio di danni.

PL

1. Powoli otwórz zawór wlotowy, aby stopniowo zwiększyć ciśnienie w urządzeniu.

2. Powoli otwórz zawór wylotowy, aby zwiększyć ciśnienie w rurach w dół przepływu.

Nie wolno szybko otwierać zaworów wlotowych ani wylotowych, ponieważ może to doprowadzić do zbyt dużej różnicy ciśnień w urządzeniu i do jego uszkodzenia.

SK

1. Pre postupné natlakovanie jednotky pomaly otvorte prívodný ventil.

2. Pre opätovné natlakovanie potrubia v smere toku pomaly otvorte vývodný ventil.

Neotvárajte prívodný alebo vývodný ventil rýchlo ani nevystavujte jednotku nadmernému rozdielu tlaku, lebo môže dôjsť k poškodeniu.

CS

1. Pomalým otevřením přívodního ventilu jednotku pozvolna natlakujte.

2. Pomalým otevřením výstupního ventilu znovu natlakujte potrubí ve směru rozvodu.

Přívodní ani výstupní ventily neotvírejte rychle, ani jednotku nevystavujte nadměrným rozdílům tlaku, v opačném případě může dojít k poškození.

ET

1. Üksuse järkjärguliseks survestamiseks avage sisselaskeventiil aeglaselt.

2. Surve taastamiseks väljavoolutorustikus avage väljalaskeventiil aeglaselt.

Sisselaske- ja väljalaskeventiile ei tohi avada kiiresti ega põhjustada üksuses liiga suurt survelangu, mis võib tekitada sellele kahjustusi.

HU

1. Az egység fokozatosan történő nyomás alá helyezéséhez a bemenő szelepet lassan nyissa meg.

2. Az elmenő csővezeték nyomásának visszaállításához lassan nyissa meg az elmenő szelepet

A berendezés károsodásának elkerülése érdekében ne nyissa meg túl gyorsan a bemenő vagy az elmenő szelepet, és ne tegye ki az egységet nagy nyomáskülönbségnek.

PRELIMINARY
Subject to Revision

LV

1. Lēnām atveriet ieplūdes vārstu, lai iekārtā pamazām paaugstinātu spiedienu.

2. Lēnām atveriet izplūdes vārstu, lai caurulēs plūsmas virzienā samazinātu spiedienu

Neatveriet ieplūdes un izplūdes vārstus strauji, pretējā gadījumā attiecīgajā iekārtā var rasties pārmērīgi liels spiediens vai tā var sabojāties.

LT

1. Lėtai atidarydami įleidimo vožtuvą, palaipsniui sudarykite slėgį įrenginyje.

2. Lėtai atidarydami išleidimo vožtuvą, iš naujo sudarykite slėgį pasroviui esančiame vamzdyne

Negalima staigiai atidaryti įleidimo ar išleidimo vožtuvų, nei paveikti įrenginio pernelyg dideliu diferencialiniu slėgiu, nes galima sugadinti įrangą.

RU

1. Впускной клапан следует открывать плавно, чтобы постепенно создать давление в устройстве.

2. Плавно откройте впускной клапан, чтобы создать давление в системе трубопровода

Запрещено резко открывать впускной или выпускной клапаны, а также используемое устройство, так как это может привести к перепаду давления и повреждениям.

SL

1. Za počasno dajanje pod pritisk počasi odprite dovodni ventil.

2. Počasi odprite dovodni ventil za ponovno dajanje spodnjih cevi pod pritisk.

Dovodne ali odvodne ventile odpirajte počasi in enote ne izpostavljajte prevelikim nihanjem tlaka, saj lahko to povzroči škodo.

TR

1. Giriş valfini yavaşça açıp üniteye yavaş yavaş basınç uygulayın.

2. Mensap tarafındaki borulara yeniden basınç uygulamak için çıkış valfini yavaşça açın

Giriş ve çıkış valflerini hızla açmayın ve üniteyi aşırı basınç farklarına maruz bırakmayın; aksi halde hasar görebilir.

MT

1. Iftaħ il-valv tad-dħul bil-mod, biex bil-mod tiżdied il-pressjoni fit-taħħmir.

2. Iftaħ il-valv tal-ħruġ bil-mod biex terġa' tibni l-pressjoni fil-pajps li jwasslu 'l isfel

Ara li ma tiftaħx il-valvs tad-dħul jew tal-ħruġ f'daqqa jew b'xi mod tikkawża differenza eċċessiva fil-pressjoni tat-taħħmir għax tista' taħħmel il-ħsara.

RO

1. Deschide¸i lent supapa de admisie, pentru a presuriza gradat aparatul.

2. Deschide¸i lent supapa de evacuare pentru a represuriza sistemul de conducte din aval

Nu deschide¸i rapid supapele de admisie sau de evacuare ∫i nu supune¸i aparatul la o diferen¸„ excesiv„ de presiune; Ón caz contrar, aparatul poate suferi deterior„ri

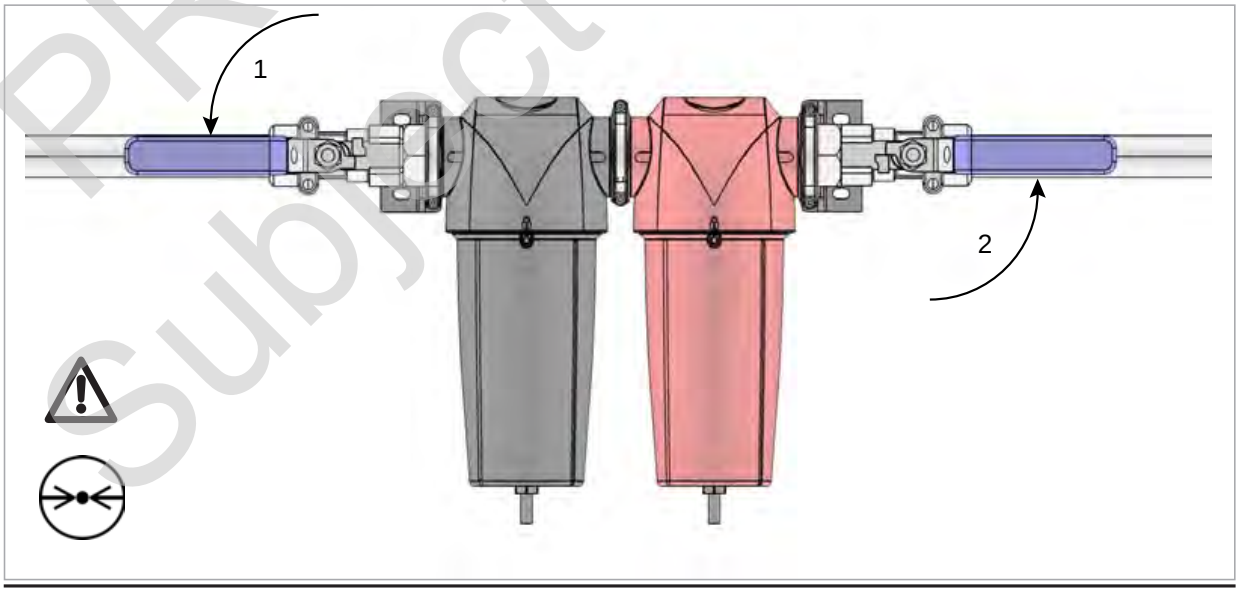

PRELIMINARY
Subject to Revision

4. Accessories

• **Toebehoren** • Zubehör • **Accessoires** • Lisävarusteet • **Tillbehör** • Tilbehør • **Tilbehør** • Εξαρτήματα • **Accesorios** • Acessórios • **Accessori** • Wyposażenie • Príslušenstvo • Příslušenství • Tarvikud • Tartozékok • Piederumi • Priedai • Принадлежности • Dodatna oprema • **Aksesuarlar** • Aċċessorji • **Accesorii**

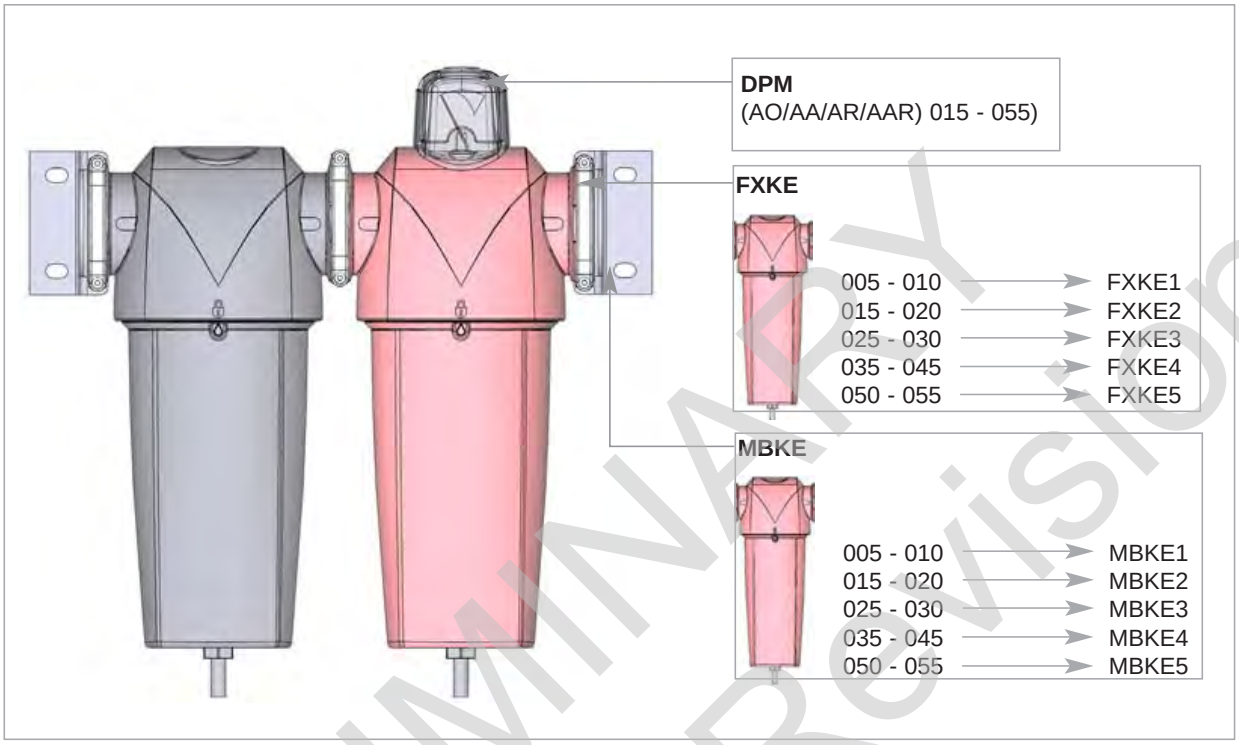

PRELIMINARY
Subject to Revision

5. Spare Parts (Service Kits)

• **Reserve-onderdelen (servicekits)** • Ersatzteile (Service-Kits) • **Pièces de rechange (nécessaires d'entretien)** • Varaosat (Huoltopakkaukset) • **Reservdelar (servicesatser)** • Reservedeler (service-sett) • **Reservedele (Servicekit)** • Ανταλλακτικά (Πακέτα τεχνικής υποστήριξης) • **Piezas de repuesto (kits de mantenimiento)** • Peças Sobressalentes (Kit de Reparação) • **Ricambi (kit per l'assistenza)** • Części zamienne (zestawy serwisowe) • Náhradné diely (Servisná súprava) • Náhradní díly (Sady pro údržbu) • Varuosad (hooldekomplektid) • Pótalkatrészek (szervizkészletek) • Rezerves daļas (apkopes komplekti) • Atsarginės dalys (priežiros detalių komplektai) • Запасные части (ЗИП) • Nadomestni deli (servisni kompleti) • **Yedek parça (Servis kitleri)** • Partijiet Ghat-Tibdil (Kitts tas-Servizz) • **Piese de schimb (Truse de service)**

EF1

• **AUTOMATIC DRAIN**
• **AUTOMATISCHER ABLAUF**
• **VIDANGE AUTOMATIQUE**
• **AUTOMISCHAFTAPPEN**
• **DRENAJE AUTOMATICO**
• **SCARIO AUTOMATICO**
• **AUTOMATISK AFLØB**
• **DRENO AUTOMÁTICO**
• ΑΥΤΟΜΑΤΗ ΑΠΟΣΤΡΑΓΓΙΣΗ
• **AUTOMATDRÄNERING**
• **AUTOMAATTINEN**
• **TYHJENNYSKAPPALE**
• DREN AUTOMATYCZNY
• AUTOMATICKÉ VYSUŠENIE
• AUTOMATICKÉ VYPOUŠTĚNÍ
• AUTOMAATNE VÄLJALASE
• AUTOMATIKUS LEERESZTÉS
• AUTOMĀTISKA IZTECINĀŠANA
• AUTOMATINIS IŠLEIDIMAS
• АВТОМАТИЧЕСКИЙ ДРЕНАЖ
• SAMODEJNI ODTOK
• **OTOMATİK SÜZDÜRÜCÜ**
• **DREJN AWTOMATIKU**
• **EVACUARE AUTOMAT√**

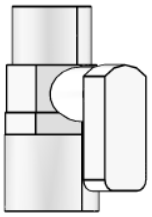

EM1

• **MANUAL DRAIN**
• **MANUELLER ABLAUF**
• **VIDANGE MANUELLE**
• **MANUEEL AFTAPPEN**
• **DRENAJE MANUAL**
• **SCARIO MANUALE**
• **MANUELT AFLØB**
• **DRENO MANUAL**
• ΧΕΙΡΟΚΙΝΗΤΗ ΑΠΟΣΤΡΑΓΓΙΣΗ
• **MANUELL DRÄNERING**
• **KÄSIKÄYTTÖINEN**
• **TYHJENNYSKAPPALE**
• DREN RĘCZNY
• RUČNÉ VYSUŠENIE
• RUČNÍ VYPOUŠTĚNÍ
• KÄSITSI VÄLJALASE
• KÉZI LEERESZTÉS
• MANUĀLA IZTECINĀŠANA
• RANKINIS IŠLEIDIMAS
• ДРЕНАЖ ВРУЧНУЮ
• ROČNI ODTOK
• **ELLE KULLANILACAK SÜZDÜRÜCÜ**
• **DREJN MANWALI**
• **EVACUARE MANUAL√**

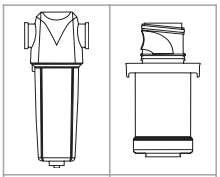

AO005A	005AO
AO005B	005AO
AO005C	005AO
AO010A	010AO
AO010B	010AO
AO010C	010AO
AO015B	015AO
AO015C	015AO
AO020C	020AO
AO020D	020AO
AO020E	020AO
AO025D	025AO
AO025E	025AO
AO030E	030AO
AO030F	030AO
AO030G	030AO
AO040G	040AO
AO040H	040AO
AO045H	045AO
AO050I	050AO
AO050J	050AO
AO055I	055AO
AO055J	055AO

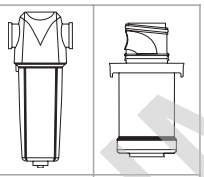

AA005A	005AA
AA005B	005AA
AA005C	005AA
AA010A	010AA
AA010B	010AA
AA010C	010AA
AA015B	015AA
AA015C	015AA
AA020C	020AA
AA020D	020AA
AA020E	020AA
AA025D	025AA
AA025E	025AA
AA030E	030AA
AA030F	030AA
AA030G	030AA
AA040G	040AA
AA040H	040AA
AA045H	045AA
AA050I	050AA
AA050J	050AA
AA055I	055AA
AA055J	055AA

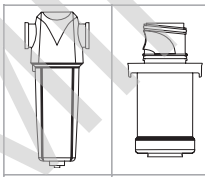

ACS005A	005ACS
ACS005B	005ACS
ACS005C	005ACS
ACS010A	010ACS
ACS010B	010ACS
ACS010C	010ACS
ACS015B	015ACS
ACS015C	015ACS
ACS020C	020ACS
ACS020D	020ACS
ACS020E	020ACS
ACS025D	025ACS
ACS025E	025ACS
ACS030E	030ACS
ACS030F	030ACS
ACS030G	030ACS
ACS040G	040ACS
ACS040H	040ACS
ACS045H	045ACS
ACS050I	050ACS
ACS050J	050ACS
ACS055I	055ACS
ACS055J	055ACS

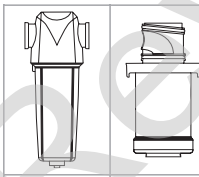

AR005A	005AR
AR005B	005AR
AR005C	005AR
AR010A	010AR
AR010B	010AR
AR010C	010AR
AR015B	015AR
AR015C	015AR
AR020C	020AR
AR020D	020AR
AR020E	020AR
AR025D	025AR
AR025E	025AR
AR030E	030AR
AR030F	030AR
AR030G	030AR
AR040G	040AR
AR040H	040AR
AR045H	045AR
AR050I	050AR
AR050J	050AR
AR055I	055AR
AR055J	055AR

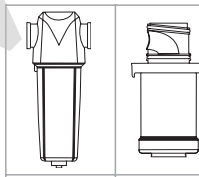

AAR005A	005AAR
AAR005B	005AAR
AAR005C	005AAR
AAR010A	010AAR
AAR010B	010AAR
AAR010C	010AAR
AAR015B	015AAAR
AAR015C	015AAR
AAR020C	020AAR
AAR020D	020AAR
AAR020E	020AAR
AAR025D	025AAR
AAR025E	025AAR
AAR030E	030AAR
AAR030F	030AAR
AAR030G	030AAR
AAR040G	040AAR
AAR040H	040AAR
AAR045H	045AAR
AAR050I	050AAR
AAR050J	050AAR
AAR055I	055AAR
AAR055J	055AAR

PRELIMINARY
Subject to Revision

EMAK1	005 - 010
EMAK2	015 - 020
EMAK3	025 - 030
EMAK4	035 - 045
EMAK5	050 - 055

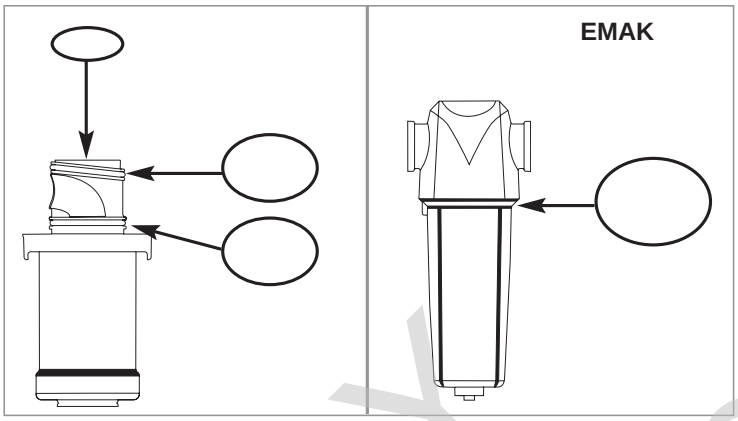

6. Maintenance

• **Onderhoud** • Wartung • **Entretien** • Kunnossapito • **Underhåll** • Vedlikehold • **Vedligeholdelse** • Συντήρηση • **Mantenimiento** • Manutenção • **Manutenzione** • Konserwacja • Údržba • Údržba • Hooldus • Karbantartás • Tehniskā apkope • Techninė priežiūra • Обслуживание • Vzdrževanja • **Bakım** • **Manutenzjoni** • **Întreținere**

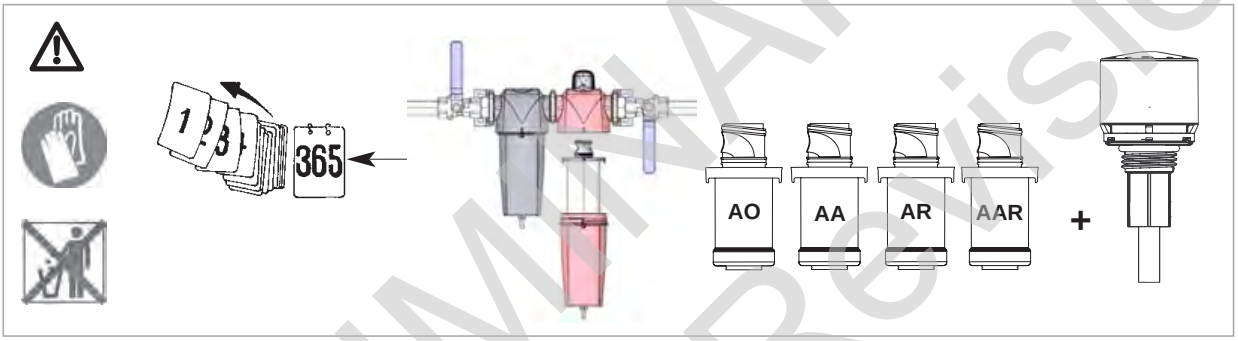

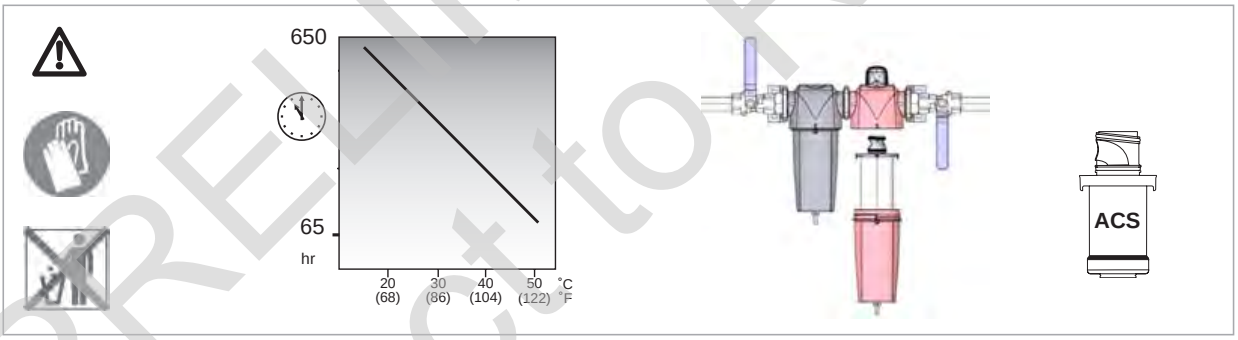

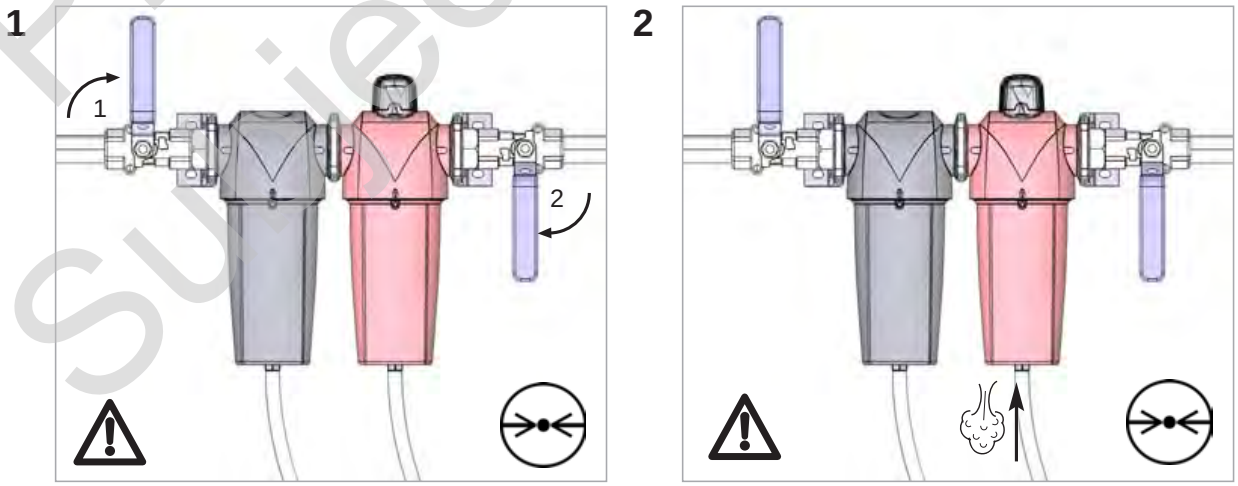

PRELIMINARY
Subject to Revision

3

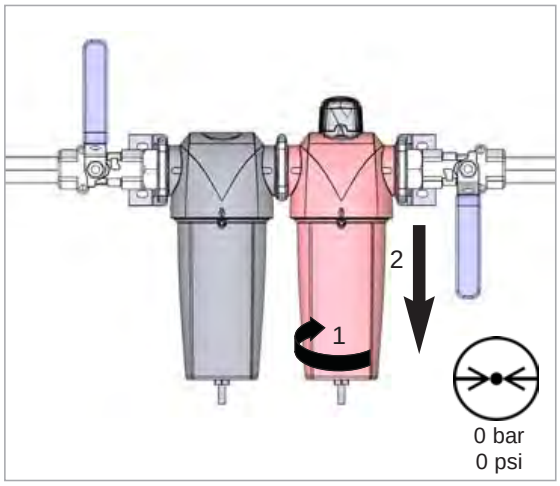

4

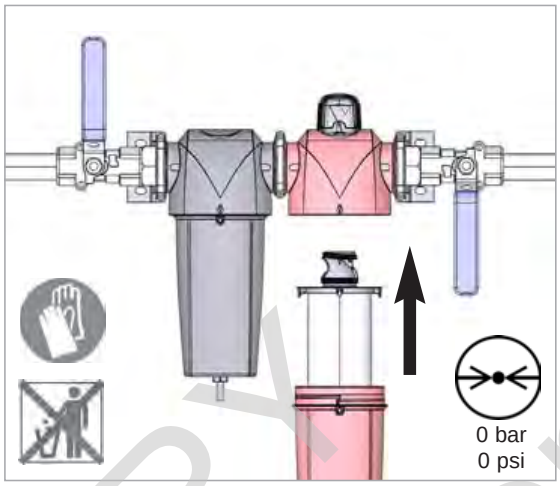

5

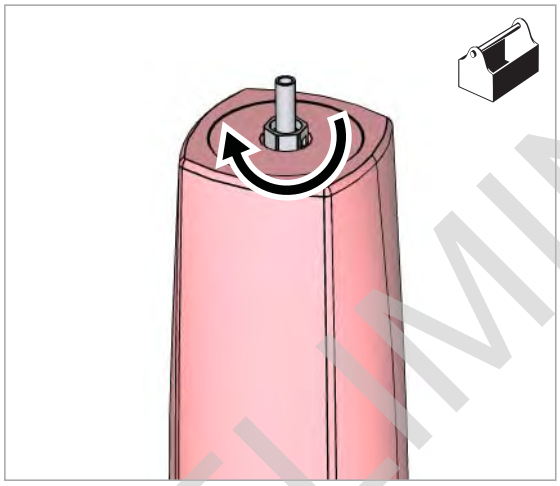

6

7

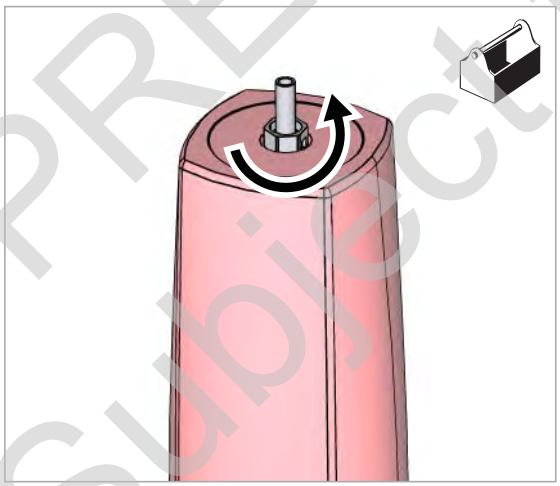

8

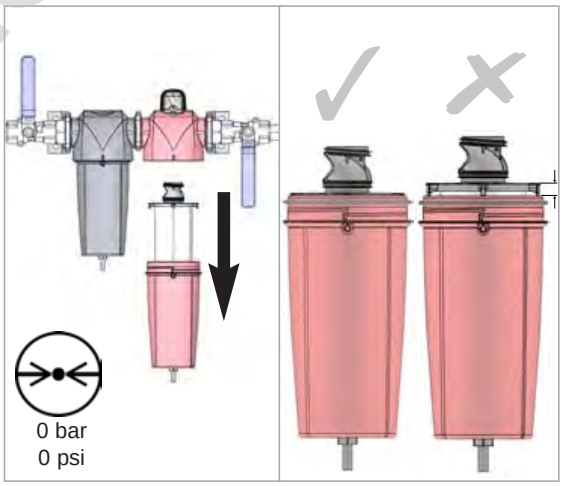

PRELIMINARY
Subject to Revision

9

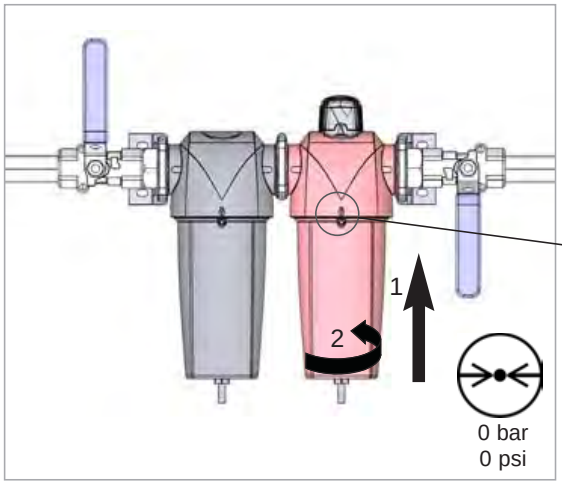

10

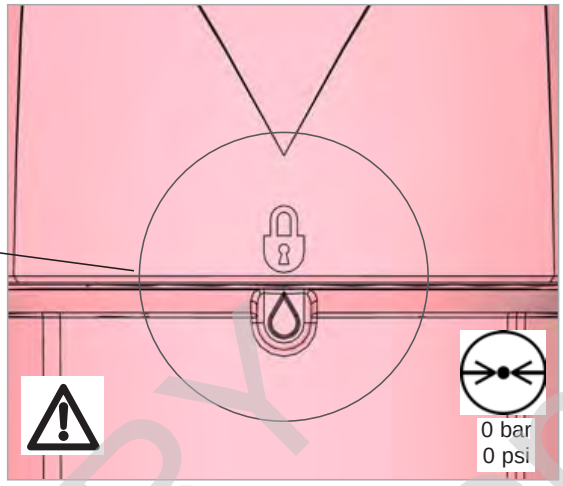

11

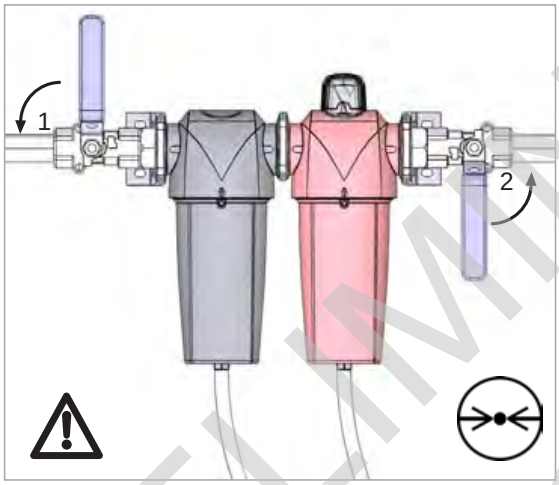

12

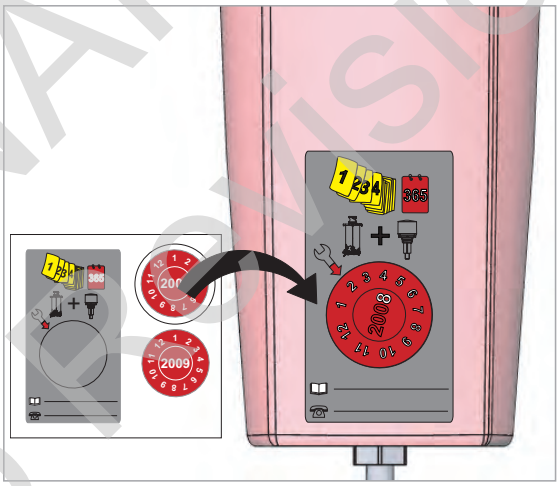

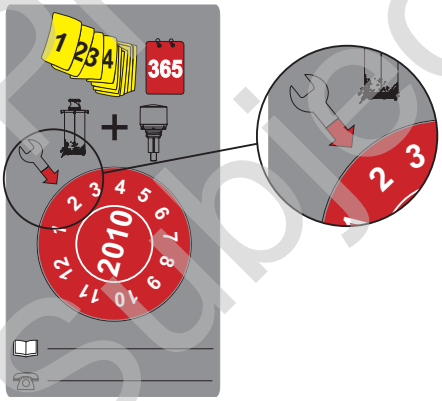

EN Align the arrow to the month and year of the next ervice
NL Breng de pijl op een lijn met de maand en het jaar van de volgende onderhoud beurt
DE Stellen Sie den Pfeil auf Monat und Jahr de näch ten Wartung termin Alignez la flèche ur
FR le moi et l'année de la prochaine révi ion
FI Kohdi ta nuoli euraavan huollon kuukauteen ja vuoteen
SV Rikta pilen mot månaden och året för nä ta ervice
NO Ju ter pilen til måneden og året for ne te ervice
DA Stil pilen på måned og år for næ te ervice
EL Ευθυγραμμίστε το βέλος με το μήνα και έτος του επόμενου σέρβις
ES Alinee la flecha con el me y año de la iguiente revi ión
PT Alinhe a eta com o mê e o ano da próxima intervenção técnica
IT Allineare la freccia in corri pondenza del me e e anno del pro imo intervento di a i tenza
PL Należy ustawić strzałkę na miesiąc i rok daty następnego serwisu
SK Šípku nasmerujte na mesiac a rok nasledujúcej opravy
CS Umístěte šipku na měsíc a rok příští prohlídky
ET Joondage nool järgmi e hooldu e kuu ja aa taga
HU Irányítsa a nyilat a következő szerviz hónapjára és évére
LV Irányítsa a nyilat a következő szerviz hónapjára és évére
LT Nustatykite rodyklę ties kitos techninės priežiūros mėnesiu ir metais
RU Совместите стрелку с месяцем и годом следующего обслуживания
SL Puščico nastavite na mesec in leto naslednjega servisa
TR Oku bir sonraki servis işleminin ay ve yılına hizalayın
MT Allinja l-vleġġa ghax-xahar u s-sena tas-servis li jmiss
RO Aliniaţi săgeata în dreptul lunii şi al anului următoarei vizite de service

PRELIMINARY
Subject to Revision

ФЕДЕРАЛЬНАЯ СЛУЖБА
ПО ЭКОЛОГИЧЕСКОМУ, ТЕХНОЛОГИЧЕСКОМУ И АТОМНОМУ НАДЗОРУ

РАЗРЕШЕНИЕ

№ РРС 00-32481

На применение

Оборудование (техническое устройство, материал):
Оборудование, работающее под давлением, в соответствии с перечнем в приложении к настоящему разрешению.

Код ОКП (ТН ВЭД): Оборудование комплектное, коды ОКП (ТН ВЭД) в соответствии с технической документацией.

Изготовитель (поставщик): Фирма "Parker Hannifin Ltd. domnick hunter division" (Великобритания).

Основание выдачи разрешения: Техническая документация, заключение экспертизы промышленной безопасности ООО "ХАНК" № 419-840-2008 от 27.10.2008 г., сертификаты соответствия ОС ООО "ХАНК" № РОСС GB.ГС03.В00284 - №РОСС GB.ГС03.В00286 от 29.10.2008 г.

Условия применения:
1. Оформление технической документации на оборудование (паспортов, чертежей, инструкций по монтажу и эксплуатации) в соответствии с требованиями действующих в России правил промышленной безопасности на русском языке.
2. Осуществление монтажа, ввода в работу и эксплуатации оборудования в соответствии с требованиями "Правил устройства и безопасной эксплуатации сосудов, работающих под давлением".

Срок действия разрешения до 17.12.2013

Заместитель руководителя
Б.А. Красных

Дата выдачи 17.12.2008

АА 009261

PRELIMINARY
Subject to Revision

ПРИЛОЖЕНИЕ

к разрешению № РРС 00-32481 от 17.12.2008

(без разрешения недействительно)

ПЕРЕЧЕНЬ

оборудования фирмы "Parker Hannifin Ltd. domnick hunter division", разрешенного к применению на территории Российской Федерации :

1. Фильтры для взрывобезопасных газов типов:

- OIL-X-EVOLUTION (модели от 010 до 055);
- OIL-X-EVOLUTION 4" (модели 060);
- OIL-X-EVOLUTION Fabricated (модели от 100 до 500);
- OIL-X-EVOLUTION OVR (модели от OVR 100 до OVR 250);
- OIL-X-EVOLUTION AC (модели от AC 010 до AC 030);
- OIL-X-EVOLUTION WS (модели от WS 010 до WS 055);
- OIL-X Plus TF-G/H (модели от TF 55 до TF 870);
- OIL-X-EVOLUTION (модели от TFE 060 до TFE 660).

2. Осушители и аппараты для взрывобезопасных газов типов:

- MINI (модели от DM 002 до DM 006);
- Midas (модели от Das 1 до Das 7);
- MIDI DME / DM (модели от DME 012 до DME 080; от DM 012 до DM 080);
- MIDI Transportation (модели TDV – TDH – TDS - TDVC);
- MX/MPX (модели от MX 102c до MX 110; от MPX 110 до MPX 112);
- DH (модели от DH 102 до DH 110);
- PCO2 Maxi (модели от PCO2/0 до PCO2/3);
- PCO2 Maxi Plus (модели от MPlus 4000 до MPlus 10000);
- CDP (модели от CDP1 до CDP6);
- CDPlus (модели от CDPlus 8 до CDPlus 12);
- G (модели от G1 до G9);
- LC/MS (LCMS) (модели LCMS 12/2; 20; 30 – 40);
- Zero Air (модели от UHP-10ZA до UHP-200 ZA);
- CO2RP (модели от CO2RP015 до CO2RP850);
- N2Midi (модели от N2Mid350 до N2Mid601);
- Maxigas (модели от 104 до 120).

Заместитель руководителя
Б.А. Красных

АВ 087863

PRELIMINARY subject to Revision

Declaration of Conformity **EN**

Parker Hannifin ltd domn ck hunter divis on
Dukesway TVTE Gateshead Tyne & Wear NE11 0PZ UK

OIL X Evolution
AO AA ACS AR AAR 005 010 015 020 025 030
AO AA ACS AR AAR 035 040 045
AO AA ACS AR AAR 050 055

Directives	97 23/EC
Standards used	Genera ly in accordance wi h ASMEVIII Div 1 2004
PED Assessment Route	Article 3 3 (AO AA ACS AAR 005 010 015 020 025 030) Module A (AO AA ACS AAR 035 040 045) Module B (AO AA ACS AR AAR 050 055)
Notified body for PED	Lloyds Register Ve if cation 71 Fenchurch St London EC3M 4BS
EC Type exam nat on Certificate	COV0413459/TEC
Authorised Representative	Derek Bank er Divisional Qual ty Manager Parker Hannifin ltd domn ck hunter d v s on

Declaration

I declare that as the author sed representat ve he above information n relation to the supply / manufacture of this product s n conformity wi h he standards and o her related documents fo low ng the provisions of the above D rect ves

Signature **Date** 8/8/2007

Declaration Number 0002/8807

Déclaration de conformité **FR**

Parker Hannifin ltd domn ck hunter division
Dukesway TVTE Gateshead Tyne & Wear NE11 0PZ UK

OIL X Evolution
AO AA ACS AR AAR 005 010 015 020 025 030
AO AA ACS AR AAR 035 040 045
AO AA ACS AR AAR 050 055

Directives	97/23 EC
Normes utilisées	Géné alement conforme à ASMEVIII d v 1 2004
Mé hode d'évaluation de la directive d'équipements de pression	Article 3 3 (AO AA ACS AAR 005 010 015 020 025 030) Module A (AO AA ACS AAR 035 040 045) Module B (AO AA ACS AR AAR 050 055)
Organisme de notificat on pour la directive d'équipement sous pression	Lloyds Reg ster Ver fication 71 Fenchurch St London EC3M 4BS
Certificat d'examen de type CE	COV0413459/TEC
Représentant agréé	Derek Bankier D v s onal Quality Manager Parker Hannif n td domn ck hunter division

Déclaration

Je déclare à titre de représentant agréé que les informations ci dessus liées à la fourniture/fabrication de ce produit sont en conformité avec les normes et autres documents l es décla es selon les dispos tions des d rect ves susment onnées

S gnature **Date** 8/8/2007

N° de déclaration 0002/8807

Verklaring van Conformiteit **NL**

Parker Hannifin ltd domn ck hunter divis on
Dukesway TVTE Gateshead Tyne & Wear NE11 0PZ UK

OIL X Evolution
AO AA ACS AR AAR 005 010 015 020 025 030
AO AA ACS AR AAR 035 040 045
AO AA ACS AR AAR 050 055

Richtlijnen	97 23/EC
Gehanteerde normen	Gewoonlijk volgens ASMEV II D v 1 2004
PED beoordelingstraject	Artikel 3 3 (AO AA ACS AAR 005 010 015 020 025 030) Module A (AO AA ACS AAR 035 040 045) Module B (AO AA ACS AR AAR 050 055)
Aangemelde instantie voor PED	Lloyds Register Ver fication 71 Fenchu ch St London EC3M 4BS
EC Type onderzoekscertif caat	COV0413459/TEC
Bevoegde vertegenwoord ger	Derek Bankier D v s onal Quality Manager Parker Hannifin ltd domn ck hunter d v s on

Verklar ng

Als bevoegde vertegenwoord ger verklaar k dat bovenstaande informatie met betrekking tot de levering / vervaard ging van dit product overeenstemt met de normen en andere b behorende documentatie volgens de bepalingen van bovengenoemde richtlijnen

Handtekening **Datum** 8/8 2007

Verklaringnummer 0002/8807

Vaatimustenmukaisuusvakuutus **FI**

Parker Hannifin ltd domn ck hunter division
Dukesway TVTE Gateshead Tyne & Wear NE11 0PZ UK

OIL X Evolution
AO AA ACS AR AAR 005 010 015 020 025 030
AO AA ACS AR AAR 035 040 045
AO AA ACS AR AAR 050 055

Direkti vit	97/23/EC
Käytetyt standardit	Yleensä seuraavan standardin muka sesti ASMEV II D v 1 2004
PED arvioint menettely	Art kla 3 3 (AO AA ACS AAR 005 010 015 020 025 030) Moduuli A (AO AA ACS AAR 035 040 045) Moduuli B (AO AA ACS AR AAR 050 055)
PED säännösten lmoitettu laitos	Lloyds Reg ster Verificat on 71 Fenchurch St London EC3M 4BS
EY tyyppihyväksynnän sertifikaatti	COV0413459 TEC
Valtuutettu edustaja	Derek Bank er Divisional Qual ty Manager Parker Hann fin ltd domnick hunter d v s on

Vakuutus

Valtuutettuna edustajana vakuutan e tä y lä olevat tiedot jotka l ittyvät tämän tuotteen toimi tamiseen tai valm stamiseen ovat standardien ja muiden asiaan l ittyvien as akirjoien mukaisia ja noudattavat ylä ma n tuja d rektiv ejä

Allek rjoitus **Pä väys** 8 8/2007

Vakuutuksen numero 0002/8807

Konformitätserk ärung **DE**

Parker Hannifin ltd domn ck hunter divis on
Dukesway TVTE Gateshead Tyne & Wear NE11 0PZ UK

OIL X Evolution
AO AA ACS AR AAR 005 010 015 020 025 030
AO AA ACS AR AAR 035 040 045
AO AA ACS AR AAR 050 055

Richtlinien	97/23/EC
Angewandte Normen	Allgemein in Übere nst mmung m t ASMEVIII Div 1 2004
Beurteilungsroute der Druckgeräter chtlinie	Art kel 3 3 (AO AA ACS AAR 005 010 015 020 025 030) Modul A (AO AA ACS AAR 035 040 045) Modul B (AO AA ACS AR AAR 050 055)
Benannte Stelle für die Druckgeräter chtlinie	Lloyds Reg ster Verificat on 71 Fenchurch St London EC3M 4BS
EG Baumusterprüfbesche nigung	COV0413459 TEC
Bevollmächtigter Vertreter	Derek Bank er Divisional Qual ty Manager Parker Hann fin ltd domnick hunter d v s on

Erklärung

Hiermit erklä e ch als bevollmächtigter Vertreter die Konformität der oben aufgeführten Informationen in Bezug auf die Lieferung/Herste lung d eses Produkts mit den Normen und ande en zugehörigen Dokumenten gemäß den Best mmungen der oben genannten R chtlin en

Unterschrift **Datum** 8 8/2007

Nummer der Erklärung 0002 8807

Försäkran om överensstämmelse **SV**

Parker Hannifin ltd domn ck hunter division
Dukesway TVTE Gateshead Tyne & Wear NE11 0PZ UK

OIL X Evolution
AO AA ACS AR AAR 005 010 015 020 025 030
AO AA ACS AR AAR 035 040 045
AO AA ACS AR AAR 050 055

Direktiv	97/23 EC
Använda standarder	Gene el t i enl ghet med ASMEVIII Div 1 2004
Fastställningsväg för PED	Artikel 3 3 (AO AA ACS AAR 005 010 015 020 025 030) Modul A (AO AA ACS AAR 035 040 045) Modul B (AO AA ACS AR AAR 050 055)
Anmält organ för PED	Lloyds Reg ster Ver fication 71 Fenchurch St London EC3M 4BS
EG intyg om typprovning	COV0413459/TEC
Auktoriserad representant	Derek Bankier D v s onal Quality Manager Parker Hannif n td domn ck hunter division

Försäkran

Jag försäkrar i egenskap av auktoriserad representant att ovannämnda info mation avseende leverans ti iverkn ng av denna produkt öve ensstämmer med standarder och övriga relaterade dokument enligt vi koren i ovanstående d rekt v

Underskrift **Datum** 8/8/2007

Försäkran nummer 0002/8807

PRELIMINARY
Subject to Revision

Konformitetserk ær ng **NO**

Parker Hannifin ltd domn ck hunter divis on
Dukesway TVTE Gateshead Tyne & Wear NE11 0PZ UK

OIL X Evolution
AO AA ACS AR AAR 005 010 015 020 025 030
AO AA ACS AR AAR 035 040 045
AO AA ACS AR AAR 050 055

Direktiver	97 23/EC
Benyttede standarder	Hovedsakelig i samsvar med ASMEVIII d v 1 2004
Rute for vurdering av PED (d rekt vet for trykkpålagt utstyr)	Paragraf 3 3 (AO AA ACS AAR 005 010 015 020 025 030) Modul A (AO AA ACS AAR 035 040 045) Modul B (AO AA ACS AR AAR 050 055)
Underrettet organ for PED	Lloyds Register Ver fication 71 Fenchu ch St London EC3M 4BS
EC typegodkjenn ngssertifikat	COV0413459/TEC
Autorisert representant	Derek Bankier D v s onal Quality Manager Parker Hannifin ltd domn ck hunter d v s on

Erklæring

Jeg erklærer som autor sert representant at nformasjonen ovenfor med hensyn til levering/produksjon av dette produktet er i overensstemmelse med standardene og and e relaterte dokumenter følge bestemmelsene i direkt vene ovenfor

Signatur **Dato** 8/8/2007

Erklæring nr 0002/8807

Declaración de conformidad **ES**

Parker Hannifin ltd domn ck hunter division
Dukesway TVTE Gateshead Tyne & Wear NE11 0PZ UK

OIL X Evolution
AO AA ACS AR AAR 005 010 015 020 025 030
AO AA ACS AR AAR 035 040 045
AO AA ACS AR AAR 050 055

Directivas	97 23 EC
Normas ut lizadas	Generalmente de conform dad con ASMEVIII Div 1 2004
Ruta de evaluación de la normativa PED	Artículo 3 3 (AO AA ACS AAR 005 010 015 020 025 030) Módulo A (AO AA ACS AAR 035 040 045) Módulo B (AO AA ACS AR AAR 050 055)
Organismo not ficado para la normativa PED	Lloyds Register Ver fication 71 Fenchurch St London EC3M 4BS
Cert ficado de examen CE de t po	COV0413459/TEC
Representante autorizado	Derek Bankier D v s onal Quality Manager Parker Hannifin ltd domn ck hunter division

Declarac ón

Como representante autorizado declaro que la información anter ormente expuesta en relac ón con el sum n stro y/o fabr cac ón de este p oducto cumple las normativas ndicadas y otros documentos afines según las disposiciones de las Direct vas c tadas anteriormente

Firma **Fecha** 8 8/2007

Número de declaración 0002/8807

Overensstemmelseserklæring **DA**

Parker Hannifin ltd domn ck hunter divis on
Dukesway TVTE Gateshead Tyne & Wear NE11 0PZ UK

OIL X Evolution
AO AA ACS AR AAR 005 010 015 020 025 030
AO AA ACS AR AAR 035 040 045
AO AA ACS AR AAR 050 055

Direktiver	97/23 EC
Anvendte standarder	Generelt i overensstemmelse med ASMEVIII div 1 2004
Forløb for PED bedømmelse	Artikel 3 3 (AO AA ACS AAR 005 010 015 020 025 030) Modul A (AO AA ACS AAR 035 040 045) Modul B (AO AA ACS AR AAR 050 055)
Not ficeret organ for PED	Lloyds Reg ster Ver fication 71 Fenchurch St London EC3M 4BS
EF typeafprøvningsattest	COV0413459/TEC
Autoriseret repræsentant	Derek Bankier D v s onal Quality Manager Parker Hannif n td domn ck hunter division

Erklæring

Jeg erklærer hermed som autor seret repræsentant at ovennævnte oplysninger ved arende levering/produkt on af dette produkt er i overensstemmelse med de anfarte standarder og øvrige tilknyttede dokumenter i henhold t l bestemmelserne i ovenstående d rekt ver

Underskrift **Dato** 8/8/2007

Erklær ngsnummer 0002/8807

Declaração de Conformidade **PT**

Parker Hannifin ltd domn ck hunter division
Dukesway TVTE Gateshead Tyne & Wear NE11 0PZ UK

OIL X Evolution
AO AA ACS AR AAR 005 010 015 020 025 030
AO AA ACS AR AAR 035 040 045
AO AA ACS AR AAR 050 055

Directivas	97/23/EC
Padrões utilizados	De forma geral em concordânc a com ASMEV II D v 1 2004
Percurso de Aval ação do PED	Artigo 3 3 (AO AA ACS AAR 005 010 015 020 025 030) Módulo A (AO AA ACS AAR 035 040 045) Módulo B (AO AA ACS AR AAR 050 055)
Not ficado para o PED	Lloyds Reg ster Ver ficat on 71 Fenchurch St London EC3M 4BS
Cert ficado de Inspecção Tipo CE	COV0413459 TEC
Revendedor Autorizado	Derek Bankier D v s onal Quality Manager Parker Hannif n td domnick hunter division

Declaração

Declaro na qualidade de representante auto izado que as nformações acima contidas referentes ao fornec mento / fabrico deste produto estão em conformidade com as normas e outros documentos relac onados de acordo com as dispos ções das Directivas anteriores

Assinatura **Data** 8/8/2007

Número da Declaração 0002/8807

Δήλωση συμμόρφωσης **EL**

Parker Hannifin ltd domn ck hunter divis on
Dukesway TVTE Gateshead Tyne & Wear NE11 0PZ UK

OIL X Evolution
AO AA ACS AR AAR 005 010 015 020 025 030
AO AA ACS AR AAR 035 040 045
AO AA ACS AR AAR 050 055

Οδηγίες	97 23/EC
Πρότυπα που χρησιμοποιήθηκαν	Γεν κά σε συμφων α με το ASMEVIII Div 1 2004
Δ αδρομή αξιολόγησης για κανον σμούς PED	Αρθρο 3 3 (AO AA ACS AAR 005 010 015 020 025 030) Ενότητα A (AO AA ACS AAR 035 040 045) Ενότητα B (AO AA ACS AR AAR 050 055)
Ενήμερος οργανισμός για κανον σμούς PED	Lloyds Register Verif cation 71 Fenchurch St London EC3M 4BS
Π στοποιητ κό εξέτασης τύπου ΕΚ	COV0413459/TEC
Εξουσιοδοτημένος αντ πρόσωπος	Derek Bankier Divisional Qual ty Manager Parker Hannifin ltd domn ck hunter divis on

Δήλωση

Δηλώνω ως ο εξουσιοδοτημένος αντ πρόσωπος όπ οι παραπάνω πληροφορ ες σε σχέση με τη δ άθεση / κατασκευή αυτού του προ όντος συμμορφώνονται ως προς τα πρότυπα και ως προς τα άλλα σχετ κά έγγραφα που συνοδεύουν τ ς δ ατάξεις των πιο πάνω οδηγ ών

Υπογραφή **Ημερομηνία** 8/8 2007

Αριθμός δήλωσης 0002/8807

Dichiarazione di conformità **IT**

Parker Hannifin ltd domn ck hunter division
Dukesway TVTE Gateshead Tyne & Wear NE11 0PZ UK

OIL X Evolution
AO AA ACS AR AAR 005 010 015 020 025 030
AO AA ACS AR AAR 035 040 045
AO AA ACS AR AAR 050 055

Direttive	97 23 EC
Norme util zzate	Generalmente confo me a ASMEVIII Div 1 2004
Procedura di valutazione PED	Articolo 3 3 (AO AA ACS AAR 005 010 015 020 025 030) Moduli A (AO AA ACS AAR 035 040 045) Moduli B (AO AA ACS AR AAR 050 055)
Organismo accreditato per PED	Lloyds Register Ver fication 71 Fenchurch St London EC3M 4BS
Attestato di certif cazione tipo CE	COV0413459/TEC
Rappresentante autor zzato	Derek Bankier D v s onal Quality Manager Parker Hannifin ltd domn ck hunter division

Dichiarazione

In qualità di rappresentante auto izzato dichiaro che le informaz oni di cui sopra in mer to alla fornitura fabbr caz one del prodotto n oggetto sono conformi alle norme ndicate e a qualsiasi a tro documento correlati a la form tura basato su quanto prescri to dalle dire tive menzionate

Firma **Data** 8 8/2007

Dichiarazione numero 0002/8807

PRELIMINARY Subject to Revision

Deklaracja zgodności **PL**

Parker Hannifin ltd domn ck hunter divis on
Dukesway TVTE Gateshead Tyne & Wear NE11 0PZ UK

OIL X Evolution
AO AA ACS AR AAR 005 010 015 020 025 030
AO AA ACS AR AAR 035 040 045
AO AA ACS AR AAR 050 055

Dyrektywy	97/23/EC
Stosowane standardy	Ogólnie zgodny z ASMEVIII dział 1 2004
Ścieżka potwierdzania zgodności z PED	Artykuł 3 3 (AO AA ACS AAR 005 010 015 020 025 030) Moduł A (AO AA ACS AAR 035 040 045) Moduł B (AO AA ACS AR AAR 050 055)
Organ/instytucja powiadamiana na mocy PED	Lloyds Reg ster Ver ficat on 71 Fenchurch St London EC3M 4BS
Certyfikat badan a typu WE	COV0413459 TEC
Autoryzowany przedstawiciel	Derek Bankier D v s onal Quality Manager Parker Hannif n td domn ck hunter division

Deklaracja

Ośw adczam jako auto yzowany przedstawiciel że powyższe informacje dotyczące dostawy / wytworzen a niniejszego produktu są zgodne ze standardami i innymi dokumentami powiązanymi zgodn e z postanowieniami powyższych dyrektyw

Podpis **Data** 8 8/2007

Numer deklaracji 0002/8807

Vastavusdeklaratsioon **ET**

Parker Hannifin ltd domn ck hunter division
Dukesway TVTE Gateshead Tyne & Wear NE11 0PZ UK

OIL X Evolution
AO AA ACS AR AAR 005 010 015 020 025 030
AO AA ACS AR AAR 035 040 045
AO AA ACS AR AAR 050 055

Direkti vid	97/23 EC
Kasutatud standardid	Üld selt vastavuses standard ga ASMEVI I D v 1 2004
PED vastavushinnangu jaotus	A tikkel 3 3 (AO AA ACS AAR 005 010 015 020 025 030) Moodul A (AO AA ACS AAR 035 040 045) Moodul B (AO AA ACS AR AAR 050 055)
PEDist (surveseadmete direktiivist) teav tatud asutus	Lloyds Register Ver fication 71 Fenchurch St London EC3M 4BS
EÜ tüübih ndamistõend	COV0413459/TEC
Volitatud es ndaja	Derek Bankier D v s onal Quality Manager Parker Hannif n ltd domn ck hunter division

Deklaratsioon

Volitatud esindajana kinn tan et üleltoodud teave seoses antud toote tarn m se/tootmisega on vastavuses standardite ja muude seotud dokumentidega vastava t üleltoodud d rekti v de sätetele

Allkiri **Kuupäev** 8 8/2007

Deklaratsiooni number 0002/8807

Vyhlásenie o zhode **SK**

Parker Hannifin ltd domn ck hunter divis on
Dukesway TVTE Gateshead Tyne & Wear NE11 0PZ UK

OIL X Evolution
AO AA ACS AR AAR 005 010 015 020 025 030
AO AA ACS AR AAR 035 040 045
AO AA ACS AR AAR 050 055

Smern ce	97 23/EC
Použ té normy	Vo všeobecnosti v zhode s ASMEV II oddiel 1 2004
Spôsob posudzovania podľa smernice PED	Článok 3 3 (AO AA ACS AAR 005 010 015 020 025 030) Modul A (AO AA ACS AAR 035 040 045) Modul B (AO AA ACS AR AAR 050 055)
Oboznámený orgán podľa smernice PED	Lloyds Register Ver fication 71 Fenchu ch St London EC3M 4BS
Osvedčenie typovej skúšky ES	COV0413459/TEC
Splnomocnený zástupca	Derek Bankier D v s onal Quality Manager Parker Hannifin ltd domn ck hunter d v s on

Vyhlásenie

Ako splnomocnený zástupca vyhlasujem že nformácie uvedené vyššie sú v súv slosti s dodávkou / výrobou tohto výrobku v zhode s normami a nými súvisiac mi dokumentmi podľa ustanovení uvedených smern c

Podpis **Dátum** 8/8/2007

Číslo vyhlásen a 0002 8807

Megfelelőségi nyi atkozat **HU**

Parker Hannifin ltd domn ck hunter division
Dukesway TVTE Gateshead Tyne & Wear NE11 0PZ UK

OIL X Evolution
AO AA ACS AR AAR 005 010 015 020 025 030
AO AA ACS AR AAR 035 040 045
AO AA ACS AR AAR 050 055

Direktívák	97/23/EC
Alkalmazott szabványok	A talánosan a következő alapján ASMEV II D v 1 2004
PED értékelési irányvonal	3 3 as c kkely (AO AA ACS AAR 005 010 015 020 025 030) Modulok A (AO AA ACS AAR 035 040 045) Modulok B (AO AA ACS AR AAR 050 055)
PED del kapcsolatban értes tett testület	Lloyds Reg ster Verificat on 71 Fenchurch St London EC3M 4BS
EC t pusvizsgálati bizonyítvány	COV0413459 TEC
Hivatalos képviselő	De ek Bankier Divisional Quality Manager Parker Hannif n td domnick hunter division

Nyilatkozat

Hivatalos képviselőként kijelentem hogy a termék szállításával / gyártásával kapcsolatos fent olvasható informác ók megfelelnek a fenti Direktívák elő rásai szerinti szabványoknak és egyéb kapcsolódó dokumentumoknak

Aláírás **Dátum** 8/8/2007

Nyilatkozat száma 0002/8807

Prohlášení o shodě **CS**

Parker Hannifin ltd domn ck hunter divis on
Dukesway TVTE Gateshead Tyne & Wear NE11 0PZ UK

OIL X Evolution
AO AA ACS AR AAR 005 010 015 020 025 030
AO AA ACS AR AAR 035 040 045
AO AA ACS AR AAR 050 055

Směrn ce	97 23/EC
Použ té normy	Obecně v souladu ASMEVIII Div 1 2004
Metoda stanovení shody pro tlaková zař zení (PED)	Článek 3 3 (AO AA ACS AAR 005 010 015 020 025 030) D lčí část A (AO AA ACS AAR 035 040 045) D lčí část B (AO AA ACS AR AAR 050 055)
Notif kovaný orgán pro PED	Lloyds Register Ver fication 71 Fenchu ch St London EC3M 4BS
Osvědčení o zkoušce typu ES	COV0413459/TEC
Oprávněný zástupce	Derek Bank er Divisional Qual ty Manager Parker Hann fin ltd domnick hunter d v s on

Prohlášení

Jako oprávněný zástupce prohlašuji že výše uvedené nformace týkající se dodávky /výroby tohoto produktu jsou v souladu s normami a j nými souv sej cími dokumenty vyplývajícími z ustanovení výše uvedených směrnic

Podpis **Datum** 8/8 2007

Č slo prohlášení 0002/8807

Atbilstības deklarācija **LV**

Parker Hannifin ltd domn ck hunter division
Dukesway TVTE Gateshead Tyne & Wear NE11 0PZ UK

OIL X Evolution
AO AA ACS AR AAR 005 010 015 020 025 030
AO AA ACS AR AAR 035 040 045
AO AA ACS AR AAR 050 055

Direktīvas	97 23/EC
Izmantotie standarti	Parasti saskaņa ar ASMEVI I D v 1 2004
PED novērtējums	Pants 3 3 (AO AA ACS AAR 005 010 015 020 025 030) Modulis A (AO AA ACS AAR 035 040 045) Modulis B (AO AA ACS AR AAR 050 055)
Par PED informētā organizāc ja	Lloyds Register Ver fication 71 Fenchu ch St London EC3M 4BS
EK sastādīts Eksaminācijas sertifikāts	COV0413459/TEC
Pilnvarotais pārstāvis	Derek Bankier D v s onal Quality Manager Parker Hannifin ltd domn ck hunter d v s on

Deklarācija

Es kā pilnvarots pārstāvis ar šo paziņoju ka iepriekšminētā informācija kas a tiecas uz šī produkta piegādi / ražošanu atbilst standartiem un c tiem a blistošiem dokumentiem saskaņā ar iep iekšm nētajām D rektīvām

Paraksts **Datums** 8/8/2007

Deklarāc jas numurs 0002/8807

PRELIMINARY
Subject to Revision

Atitikties deklaracija LT

Parker Hannifin ltd domn ck hunter division
Dukesway TVTE Gateshead Tyne & Wear NE11 0PZ UK

OIL X Evolution
AO AA ACS AR AAR 005 010 015 020 025 030
AO AA ACS AR AAR 035 040 045
AO AA ACS AR AAR 050 055

Direktyvos	97 23/EC
Naudoti standartai	Atitinka bendrąsias ASMEVIII Div 1 : 2004 nuostatas
PED įvertinimo pakopa:	3 3 stra psn s (AO AA ACS AAR 005 010 015 020 025 030) Modulis A (AO AA ACS AAR 035 040 045) Modulis B (AO AA ACS AR AAR 050 055)
PED notifikuotoji institucija	Lloyds Register Ver fication 71 Fenchu ch St London EC3M 4BS
EB t po testavimo sertifikatas	COV0413459/TEC
Įgaliotasis atstovas	Derek Bankier D v s onal Quality Manager Parker Hannifin ltd domn ck hunter d v s on

Deklaracija

Aš, įgaliotasis atstovas, patvirtinu, kad aukščiau pateikta gaminio tiekimo/pagaminimo informacija atitinka aukščiau nurodytus standartus ir kitą su nurodytų direktyvų nuostatomis susijusią dokumentaciją.

Parašas **Data** 8 8/2007

Deklaracijos numeris 0002 8807

Uyum Beyanı TR

Parker Hannifin ltd domn ck hunter division
Dukesway TVTE Gateshead Tyne & Wear NE11 0PZ UK

OIL X Evolution
AO AA ACS AR AAR 005 010 015 020 025 030
AO AA ACS AR AAR 035 040 045
AO AA ACS AR AAR 050 055

Direktifler	97/23 EC
Kullanılan standartlar	Genelde ASMEV II D v 1 2004'e uygun
PED (Basınçlı Ekipman Direktifi) Değerlendirmesi Yolu	Madde 3 3 (AO AA ACS AAR 005 010 015 020 025 030) Modül A (AO AA ACS AAR 035 040 045) Modül B (AO AA ACS AR AAR 050 055)
PED için bild rimde bulunulan kuruluş:	Lloyds Reg ster Ver fication 71 Fenchurch St London EC3M 4BS
AT Tip İncelemesi Sertifikası:	COV0413459/TEC
Yetkili Temsilci	Derek Bankier D v s onal Quality Manager Parker Hannif n td domn ck hunter division

Beyan

Yetkili temsilci olarak beyan ederim ki bu ürünün teminine / üretimine ilişkin olarak yukarıda verilen bilgiler yukarıda anılan Direktiflerin hükümlerine uyan standartlara ve ilgili başka belgelere uygundur.

İmza: **Tarih:** 8/8/2007

Beyan No 0002/8807

Декларация соответствия RU

Parker Hannifin ltd domn ck hunter division
Dukesway TVTE Gateshead Tyne & Wear NE11 0PZ UK

OIL X Evolution
AO AA ACS AR AAR 005 010 015 020 025 030
AO AA ACS AR AAR 035 040 045
AO AA ACS AR AAR 050 055

Требования	97 23 EC
Применяемые стандарты	В большинстве случаев обеспечивается соответствие стандарту ASMEVIII, Раздел 1: 2004.
Система обеспечения качества PED	Статья 3.3 (AO, AA, ACS, AAR - 005. 010 015 020 025 030) Модуль A (AO, AA, ACS, AAR - 035. 040 045) Модуль B (AO, AA, ACS, AR, AAR, - 050 055)
Уполномоченный орган для PED:	Lloyds Register Ver fication 71 Fenchurch St London EC3M 4BS
Сертификат ЕС на проведение типовых испытаний:	COV0413459/TEC
Уполномоченный представитель	Derek Bankier D v s onal Quality Manager Parker Hannifin ltd domn ck hunter division

Декларация

Как уполномоченный представитель, я заявляю, что приведенная выше информация относительно поставки/производства данного продукта соответствует стандартам, другим связанным документам и положениям указанных выше требований.

Подпись: Дата: 8 8/2007

Номер декларации: 0002/8807

Dikjarazzjoni tal Konformità MT

Parker Hannifin ltd domn ck hunter division
Dukesway TVTE Gateshead Tyne & Wear NE11 0PZ UK

OIL X Evolution
AO AA ACS AR AAR 005 010 015 020 025 030
AO AA ACS AR AAR 035 040 045
AO AA ACS AR AAR 050 055

Direttivi	97/23 EC
Standards użati	Generalment f'konformità ma' ASMEVIII Div 1 : 2004
Rotta ta' l Assessjar tal PED	Artikolu 3 3 (AO AA ACS AAR 005 010 015 020 025 030) Modulu A (AO AA ACS AAR 035 040 045) Modulu B (AO AA ACS AR AAR 050 055)
Korp notifikat ghall-PED:	Lloyds Reg ster Ver fication 71 Fenchurch St London EC3M 4BS
Certifikat tal-KE ta' l-eżaminazzjoni tat-Tip:	COV0413459/TEC
Rappreżentant Awtorizzat	Derek Bankier D v s onal Quality Manager Parker Hannif n td domn ck hunter division

D kjarazzjoni

Niddikjara li bhala r-rappreżentant awtorizzat, l-informazzjoni ta' hawn fuq, f'dak li ghandu x'jaqsam mal-fornitment/manifattura ta' dan il-prodott, hija f'konformità ma' l-istandards u d-dokumenti l-ohra relatati li jsegwu d-dispożizzjonijiet tad-Direttivi msemmija hawn fuq

Firma **Data** 8/8/2007

Numru tad Dikjarazzjoni 0002 8807

Izjava o skladnosti SL

Parker Hannifin ltd domn ck hunter division
Dukesway TVTE Gateshead Tyne & Wear NE11 0PZ UK

OIL X Evolution
AO AA ACS AR AAR 005 010 015 020 025 030
AO AA ACS AR AAR 035 040 045
AO AA ACS AR AAR 050 055

Direktive	97/23 EC
Uporabljeni standardi	Splošno skladno z ASMEVIII Div 1 2004
Ocenjevalna pot PED	Članek 3.3 (AO, AA, ACS, AAR - 005. 010, 015, 020, 025 030) Modul A (AO AA ACS AAR 035 040 045) Modul B (AO AA ACS AR AAR 050 055)
Priglašeni organ za PED	Lloyds Register Ver fication 71 Fenchurch St London EC3M 4BS
Cert fikat o tipskem pregledu ES	COV0413459/TEC
Pooblaščeni zastopnik	Derek Bankier D v s onal Quality Manager Parker Hannif n ltd domn ck hunter division

Izjava

Kot pooblaščeni zastopnik izjavljam, da so zgornji podatki glede dobave/pro zvodnje tega zdelka skladni s standardi n ostalimi sorodnimi dokumenti, ki sledijo določbam zgornjih direktiv.

Podpis **Datum** 8/8 2007

Štev lka izjave 0002/8807

Declarație de conformitate RO

Parker Hannifin ltd domnick hunter div sion
Dukesway TVTE Gateshead Tyne & Wear NE11 0PZ UK

OIL X Evolution
AO AA ACS AR AAR 005 010 015 020 025 030
AO AA ACS AR AAR 035 040 045
AO AA ACS AR AAR 050 055

Directive	97/23/EC
Standarde u ilizate	Splošno skladno z ASMEV II D v 1 2004
Traseu de evaluare PED	Članek 3.3 (AO, AA, ACS, AAR - 005, 010, 015, 020, 025 030) Modul A (AO AA ACS AAR 035 040 045) Modul B (AO AA ACS AR AAR 050 055)
Organism no ificat pentru PED	Lloyds Reg ster Verificat on 71 Fenchurch St London EC3M 4BS
Certificat de examinare de tip CE	COV0413459 TEC
Reprezentant autorizat	Derek Bankier D v s onal Quality Manager Parker Hannif n td domnick hunter division

Declarație

În calitate de reprezentant autorizat, declar că informațiile de mai sus, referitoare la furnizarea / fabricația acestui produs, sunt în conformitate cu standardele şi alte documente conexe care respectă prevederile Directivelor de mai sus.

Semnătura: **Data:** 8 8/2007

Număr declarație: 0002/8807

PRELIMINARY Subject to Revision

13.8 Option dc
Operating instructions for compressed air filter (fresh air filter)

PRELIMINARY
Subject to Revision

domnick hunter

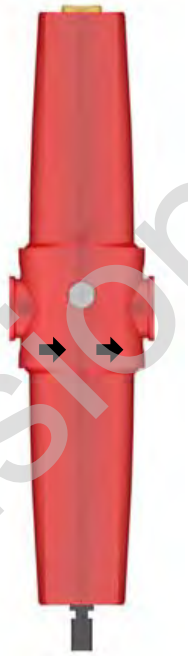

AC010 - AC030

OIL-X EVOLUTION

PRELIMINARY
Subject to Revision

Original Language (EN) **OIL VAPOUR & ODOUR REMOVAL FILTERS**

(NL) OLIEDAMP & GEUR VERWIJDERINGSFILTERS
(FR) FILTRES D'ÉLIMINATION DES ODEURS ET DES VAPEURS D'HUILE
(SV) FILTER FÖR AVLÄGSNING AV OLJEÅNGOR OCH LUKT
(DA) FILTER FÖR AVLÄGSNING AV OLJEÅNGOR OCH LUKT
(ES) FILTROS DE ELIMINACIÓN DE OLORES Y VAPORES DE ACEITE
(IT) FILTRI PER L'ELIMINAZIONE DEGLI ODORI E DEI VAPORI D'OLIO
(SK) FILTRE NA ODSTRAŇOVANIE OLEJOVÝCH VÝPAROV A ZÁPACHU
(ET) ÕLISUDU JA -HAISU EEMALDUSFILTRID
(LV) EĻĻAS TVAIKU UN AROMĀTA NOVĒRŠANAS FILTRI
(RU) ФИЛЬТРЫ ДЛЯ УСТРАНЕНИЯ ЗАПАХА И ПАРОВ МАСЛА
(TR) YAĞ BUHARI VE KOKUSU GİDERİCİ FİLTRELER
(DE) FILTER ZUM ENTFERNEN VON ÖLNEBEL UND GERÜCHEN
(FI) ÖLJYHÖYRYN JA HAJUN POISTOSUODATTIMET
(NO) OLJEDAMP- OG OLJELUKTFJERNINGSFILTRE
(EL) ΦΙΛΤΡΑ ΑΦΑΙΡΕΣΗΣ ΑΤΜΩΝ & ΟΣΜΩΝ ΛΑΔΙΟΥ
(PT) VAPOR DO ÓLEO E FILTROS DE REMOÇÃO DOS CHEIROS
(PL) FILTRY DO USUWANIA OPARÓW I ZAPACHU OLEJU
(CS) OLEJOVÉ A PROTIPACHOVÉ FILTRY
(HU) OLAJGŐZ- ÉS SZAGELTÁVOLÍTÓ SZŰRŐK
(LT) ALYVOS GARŲ IR KVAPO ŠALINIMO FILTRAI
(SL) FILTRI ZA ODSTRANJEVANJE OLJNIH HLAPOV IN VONJAV
(MT) FILTRI LI JNEĦĦU L-FWAR TAŻ-ŻJUT U L-IRWEJJAĦ

1 FILTER-DH-OIL-XEVOLUTION 01

PRELIMINARY
Subject to Revision

AC010 - AC030

Warning

- Highlights actions or procedures, which if not performed correctly, may lead to personal injury or death.
- Benadrukt de acties of procedures die, indien niet juist uitgevoerd, lichamelijk letsel of de dood kunnen veroorzaken.
- Weist auf Aktionen oder Verfahren hin, die bei fehlerhafter Durchführung zu Verletzungen und tödlichen Unfällen führen können.
- Met en relief les actions ou procédures qui, si elles ne sont pas exécutées correctement, peuvent entraîner des dommages corporels ou la mort.
- Osoittaa toimenpiteitä tai menettelytapoja, jotka väärin suoritettuina saattavat aiheuttaa henkilövahingon tai kuoleman.
- Anger åtgärder och metoder som kan orsaka personskador eller dödsfall om de inte utförs korrekt.
- Fremhever handlinger eller prosedyrer som kan føre til personskade eller dødsfall hvis de ikke utføres på korrekt måte.
- Fremhæver handlinger eller fremgangsmåder, som kan medføre personskade eller dødsfald, hvis de ikke udføres korrekt.
- Επισημαίνει τις ενέργειες ή τις διαδικασίες, οι οποίες αν δεν πραγματοποιηθούν σωστά, μπορεί να οδηγήσουν σε τραυματισμό προσωπικού ή σε θάνατο
- Destaca acciones o procedimientos que, de no realizarse correctamente, pueden ocasionar daños personales o la muerte.
- Realça as acções ou procedimentos que, se não forem executados correctamente, poderão provocar danos pessoais ou morte.
- Segnala azioni o procedure che, se non eseguite correttamente, comportano il rischio di infortuni o morte.
- Wskazuje działania i procedury, które w razie niewłaściwego wykonania mogą prowadzić do obrażeń ciała lub śmierci.
- Zvýrazňuje činnosti alebo postupy, ktoré môžu v prípade nesprávneho vykonania viesť zraneniu alebo usmrteniu.
- Upozornění na činnosti nebo postupy, jejichž nesprávné provádění může vést ke zranění nebo usmrcení osob.
- Tõstab esile toimingud või protseduurid, mis väära teostamise korral võivad põhjustada kehavigastusi või surma.
- Olyan műveleteket vagy eljárásokat jelöl, amelyek nem megfelelő módon történő végrehajtása súlyos vagy végzetes személyi sérülést okozhat.
- Uzsver darbības vai procedūras, kuru rezultātā, ja tās neveic pareizi, var izraisīt ievainojumus vai nāvi.
- Žymi veiksmus ar procedūras, kuriuos atlikus neteisingai, galima susižeisti ar mirti.
- Указывает на действия, ненадлежащее выполнение которых может привести к нанесению вреда здоровью или смерти
- Označuje dejanja ali postopke, ki lahko ob nepravilnem izvajanju poškodujejo človeka ali povzročijo smrt.
- Doğru bir şekilde yerine getirilmediği takdirde bu ürüne hasar verebilecek işlem ve süreçleri vurgular.
- Tissottolinea l-azzjonijiet jew il-proċeduri, li jekk ma jsirux kif suppost, jista' jkun hemm korriment jew mewt

Caution

- Highlights actions or procedures, which if not performed correctly, may lead to damage to this product.
- Benadrukt de acties of procedures die, indien niet juist uitgevoerd, schade kunnen berokkenen aan dit product.
- Weist auf Aktionen oder Verfahren hin, die bei fehlerhafter Durchführung zu Schäden am Gerät führen können.
- Met en relief les actions ou procédures qui, si elles ne sont pas exécutées correctement, peuvent endommager ce produit.
- Osoittaa toimenpiteitä tai menettelytapoja, jotka väärin suoritettuina saattavat vaurioittaa tätä laitetta.
- Anger åtgärder och metoder som kan orsaka skador på den här produkten om de inte utförs korrekt.
- Fremhever handlinger eller prosedyrer som kan føre til skade på produktet hvis de ikke utføres på korrekt måte.
- Fremhæver handlinger eller fremgangsmåder, som kan medføre beskadigelse af dette produkt, hvis de ikke udføres korrekt.
- Επισημαίνει τις ενέργειες ή τις διαδικασίες, οι οποίες αν δεν πραγματοποιηθούν σωστά, μπορεί να προκαλέσουν ζημιά στο προϊόν αυτό
- Destaca acciones o procedimientos que, de no realizarse correctamente, pueden ocasionar el deterioro del producto.
- Realça as acções ou procedimentos que, se não forem executados correctamente, poderão danificar este produto.
- Segnala azioni o procedure che, se non eseguite correttamente, comportano il rischio di danneggiare il prodotto.
- Wskazuje działania i procedury, które w razie niewłaściwego wykonania mogą powodować uszkodzenie produktu.
- Zvýrazňuje činnosti alebo postupy, ktoré v prípade nesprávneho vykonania môžu viesť k poškodeniu tohto výrobku.
- Upozornění na činnosti nebo postupy, jejichž nesprávné provádění může vést k poškození tohoto výrobku.
- Tõstab esile toimingud või protseduurid, mis väära teostamise korral võivad käesolevat toodet kahjustada.
- Olyan műveleteket vagy eljárásokat jelöl, amelyek nem megfelelő módon történő végrehajtása a termék károsodásához vezethet.
- Uzsver darbības vai procedūras, kuru rezultātā, ja tās neveic pareizi, var sabojāt šo izstrādājumu.
- Žymi veiksmus ar procedūras, kuriuos atlikus neteisingai, galima sugadinti šį gaminį.
- Указывает на действия, ненадлежащее выполнение которых может привести к повреждениям данного изделия
- Označuje dejanja ali postopke, ki lahko ob nepravilnem izvajanju poškodujejo izdelek.
- Doğru bir şekilde yerine getirilmediği takdirde yaralanma ya da ölüme yol açabilecek işlem ve süreçleri vurgular
- Tissottolinea l-azzjonijiet jew il-proċeduri, li jekk ma jsirux kif suppost, tista' ssir ħsara lil dan il prodott

- Suitable gloves must be worn.
- Geeignete Schutzhandschuhe tragen.
- Käytettävä asianmukaisia käsineitä.
- Bruk egnede hansker.
- Απαιτείται να φοράτε κατάλληλα γάντια
- Devem ser utilizadas luvas adequadas.
- Należy zakładać odpowiednie rękawice
- Kohustuslik kanda sobivaid kaitsekindaid
- Jāvalkā piemēroti cimdi.
- Работы должны проводиться в соответствующих перчатках
- Uygun eldiven giyilmelidir
- Altijd geschikte handschoenen dragen.
- Le port de gants adaptés est obligatoire.
- Använd lämpliga handskar.
- Der skal anvendes egnede handsker.
- Se deben llevar puestos guantes apropiados.
- Indossare guanti di protezione.
- Je nutné použít vhodné rukavice.
- Viseljen megfelelő védőkesztyűt.
- Reikia mūvėti tinkamas pirštines.
- Uporabiti je treba ustrezne rokavice.
- Ghandhom jintlibsu ingwanti adatti

- Highlights the requirements for disposing of used parts and waste.
- Benadrukt de vereisten voor het weggooien van gebruikte onderdelen en afval.
- Weist auf die Anforderungen zur Entsorgung gebrauchter Teile und Abfall hin.
- Met en relief les consignes de mise au rebut des pièces usagées et des déchets.
- Osoittaa käytettyjen osien ja jätteen hävittämistä koskevia vaatimuksia.
- Anger de krav som ställs på bortskaffande av gamla delar och avfall.
- Fremhever kravene for avhending av brukte deler og avfall.
- Fremhæver kravene til bortskaffelse af udtjente dele og affald.
- Επισημαίνει τις απαιτήσεις απόρριψης των χρησιμοποιημένων εξαρτημάτων και των απορριμμάτων
- Destaca los requisitos para desechar las piezas usadas y los residuos.
- Realça os requisitos para eliminar as peças utilizadas e os desperdícios.
- Segnala i criteri per lo smaltimento di componenti usati e rifiuti.
- Wskazuje wymagania dotyczące usuwania zużytych części i odpadów.
- Zvýrazňuje požiadavky pre zneškodňovanie použitých dielov a odpadu.
- Upozornění na požadavky týkající se likvidace použitých dílů a odpadu.
- Tõstab esile kasutatud osade ja jäätkide utiliseerimisele esitatavad nõuded
- A használt alkatrészek és a hulladék megfelelő módon történő elhelyezésére hívja fel a figyelmet.
- Uzsver prasības tam, kā atbrīvoties no lietotajām daļām un atkritumiem.
- Žymi panaudotų dalių ir atliekų išmetimo reikalavimus.
- Указывает на требования по уничтожению использованных деталей и отходов
- Označuje zahteve za odlaganje rabljenih delov in odpadkov.
- Kullanılmış parçaların ve atıkların atılmasına ilişkin gereklilikleri vurgular
- Tissottolinea l-kundizzjonijiet biex wieħed jarmi l-partijiet użati u l-iskart

2 FILTER-DH-OIL-XEVOLUTION 01

1

PRELIMINARY Subject to revision

AC010 - AC030

- Pressure.
- Paine.
- Πίεση
- Ciśnienie
- Nyomás alatt.
- Tlak
- Druk
- Tryck
- Presión.
- Tlak..
- Spiediens.
- Basınç
- Druck.
- Trykk
- Pressão.
- Tlak.
- Slėgis.
- Pressjoni
- Pression.
- Tryk
- Pressione.
- Surve.
- Давление

- Release Pressure.
- Évacuation de pression.
- Avlast trykk
- Despresurizar.
- Ciśnienie spustowe
- Surve väljalase
- Išleiskite slėgį.
- Basıncı Kaldırın
- Druk aflaten.
- Vapauta paine.
- Aflast tryk
- Liberta Pressão.
- Uvoľnite tlak.
- Engedje ki a nyomást.
- Стравить давление
- Neħħi l-pressjoni
- Druck ablassen.
- Tryckutsläpp.
- Εκτόνωση πίεσης
- Scaricare la pressione.
- Uvolnění tlaku.
- Pazeminiet spiedienu.
- Sprostitev tlaka.

- Replace every year
- Remplacer tous les ans.
- Skift ut hvert år
- Sustituir anualmente
- Należy wymieniać raz w roku
- Asendage igal aastal
- Keiskite kartą per metus
- Her yıl değiştirin
- Elk jaar vervangen
- Vaihda vuosittain.
- Udskift en gang om året
- Substituir todos os anos
- Každý rok vymieňajte
- Évente cserélje
- Заменять каждый год.
- Ibdel kull sena
- Jährlich austauschen
- Byt varje år
- Αντικατάσταση κάθε χρόνο
- Sostituire ogni anno
- Nutná výměna každý rok.
- Nomainiet reizi gadā
- Zamenjajte vsako leto.

- Filter housing / Model
- Logement du filtre/modèle.
- Filterhus/-modell
- Caja de filtro/modelo.
- Obudowa filtra / model.
- Filtri korpus/mudel
- Filtro korpusas / modelis
- Filtre muhafazası / Model
- Filterhuis / Model
- Suodatinkotelo/-malli
- Filterhus/modell
- Caixa / Modelo do filtro
- Kryt filtra / Model
- Szűrőház / típus
- Корпус фильтра / модель
- Kontenitur tal-filtru - Mudell
- Filtergehäuse / Modell
- Filterhus/modell
- Υποδοχή/μοντέλο φίλτρου
- Corpo del filtro / Modello
- Kryt filtru / Model
- Filtra korpuss / modelis
- Ohišje filtra / Model

- High efficiency filter element
- Hochleistungsfilterelement
- Tehokas suodatinelementti
- Høyeffektivt filterelement
- Φίλτρο υψηλής απόδοσης
- Elemento do filtro de elevado rendimento
- Wysokowydajny wkład filtra
- Vysoce účinný filtrační prvek
- Nagy hatékonyságú szűrőelem
- Labai efektyvus filtravimo elementas
- Visoko učinkovit filtrirni element
- Element tal-filtru b'effiċjenza kbira
- Zeer efficiënt filterelement
- Cartouche filtrante haute efficacité.
- Högeffektivt filterelement
- Högeffektivt filterelement
- Elemento filtrante de gran eficiencia.
- Elemento filtrante ad alta efficienza
- Vysoko účinný filtračný článok
- Kõrgtootlik filterelement
- Augstas produktivitātes filtra elements
- Высокоэффективный фильтрующий элемент
- Yüksek etkinlikli filtre öğesi

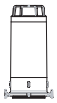

- Adsorption filter cartridge - Granular carbon
- Adsorptionsfiltereinsatz - Granulatkohle
- Adsorptiosuodatinelementti – rakeinen hiili
- Adsorpsjonsfilterpatron – Karbon i kornform
- Φυσίγγιο φίλτρου προσρόφησης - Κοκκώδης άνθρακας
- Cartucho do filtro de absorção - Carvão granular
- Adsorpcyjny wkład filtrujący z węgla ziarnistego
- Adsorpční filtrační prvek – granulovaný uhlík
- Adszorpciós szűrőbetét – granulált szén
- Adsorbcinio filtro kasetė – anglies granulės
- Kaseta adsorpcijskega filtra – zrnasti ogljik
- Kaxxa assorbenti tal-filtru – Karbonju mrammel
- Adsorptiefilter cartridge - korrelvormige actieve kool
- Cartouche filtrante d'adsorption - Charbon en granulés.
- Adsorptionsfilterkassett – Kornigt kol
- Adsorptionsfilterkassett – Kornigt kol
- Adsorptionsfilterkassett – Kornigt kol
- Cartucho filtrante de adsorción, gránulos de carbón.
- Filtro a cartuccia ad adsorbimento - granuli di carbone
- Adsorpčná filtračná kazeta – Granulovaný uhlík
- Adsorptsioonfiltri kassett – teraline süsi
- Absorbējoša filtra kasetne – graudains ogleklis
- Адсорбционный фильтрующий элемент – гранулированный уголь
- Adsorpsiyon filtresi kartuşu – Taneli karbon

- Adsorption filter element - Wrapped carbon cloth
- Adsorptie filterelement - gewikkelde koolstofdoek
- Adsorptionsfilterelement - eingewickeltes Filtertuch aus Kohlenstoff
- Cartouche filtrante d'adsorption - Charbon entouré de tissu.
- Adsorptiosuodatinelementti – kääritty hiilikangas
- Adsorptionsfilterelement – Veckad kolfiberduk
- Adsorpsjonsfilterelement – Innpakket karbonstoff
- Adsorptionsfilterelement – Veckad kolfiberduk
- Φίλτρο προσρόφησης - Τυλιγμένο ύφασμα άνθρακα
- Elemento filtrante de adsorción, capas de tejido de carbón.
- Elemento do filtro de absorção - Pano revestido de carvão
- Elemento filtrante ad adsorbimento - tessuto al carbone con struttura ad avvolgimento
- Wkład adsorpcyjny filtra ze zwijanej tkaniny z włókna węglowego
- Adsorpčný filtračný článok – Zabalená uhlíková tkanina
- Adsorpční filtrační prvek – zabalená uhlíková tkanina
- Adsorptsioonfiltri element – isoleeritud süsinikriie
- Adszorpciós szűrőelem – göngyölt szénszövet
- Absorbējošs filtra elements – satīta oglekļa drāniņa
- Adsorbcinis filtravimo elementas – susuktas anglies audinys
- Адсорбционный фильтрующий элемент – ткань из углеродистого волокна
- Adsorpcijski filtrirni element – navita ogljikova krpa
- Adsorpsiyon filtresi öğesi - Sarılı karbon kumaş
- Element tal-filtru li jassorbixxi - Xoqqa tal-karbonju mgeżwra

- Ensure coorrect tool is used
- Zorg dat het juiste gereedschap wordt gebruik
- Vérifier que les outils adéquats sont utilisés.
- Se till att rätt verktyg används.
- Sørg for at benytte korrekt værktøj
- Asegúrese de que se utiliza la herramienta adecuada
- Assicurarsi di utilizzare l'utensile corretto
- Uistite sa, že používate správny nástroj
- Tagage õige tööriista kasutamine
- Izmantojiet tikai atbilstošus darbarīkus
- Убедитесь, что используется правильный инструмент
- Doğru alet kullanılmasını sağlayın
- Stellen Sie sicher, dass Sie das richtige Werkzeug verwenden.
- Käytettävä oikeaa työkalua
- Pass på at korrekt verktøy brukes
- Βεβαιωθείτε ότι χρησιμοποιείται το σωστό εργαλείο
- Certifique-se de que é utilizada a ferramenta correcta
- Należy używać odpowiedniego narzędzia.
- Zkontrolujte použití správného nástroje
- Mindig a célnak megfelelő szerszámot használja
- Įsitikinkite, kad naudojamas reikiamas įrankis
- Poskrbite, da boste uporabili ustrezno orodje
- Kun żgur li tintuża l-ghodda t-tajba

3 FILTER-DH-OIL-XEVOLUTION 01

PRELIMINARY Subject to revision

AC010 - AC030

Warning!
This product must be installed and maintained by competent and authorised personnel only, under strict observance of these operating instructions, any relevant standards and legal requirements where appropriate.

Retain this user guide for future reference

Waarschuwing!
Dit product mag alleen geïnstalleerd en onderhouden worden door deskundig en bevoegd personeel met strikte inachtneming van deze bedieningsinstructies en de betreffende normen en wettelijke vereisten indien van toepassing.

Bewaar deze handleiding als naslag.

Warnung!
Das Produkt darf ausschließlich von autorisiertem Fachpersonal unter strikter Befolgung dieser Betriebsanleitung, ggf. relevanter Normen sowie gesetzlicher Vorschriften installiert und gewartet werden.

Bewahren Sie die Bedienungsanleitung zu Referenzzwecken auf.

Attention !
Ce produit doit être installé et entretenu exclusivement par un personnel compétent et autorisé, dans le respect le plus strict de ce mode d'emploi et des normes applicables et exigences légales éventuelles.

Conserver ce guide de l'utilisateur à titre de référence future

Varoitus!
Tämän tuotteen saa asentaa ja huoltaa vain pätevä ja valtuutettu henkilöstö, noudattaen tarkasti näitä käyttöohjeita, kaikkia asiaankuuluvia normeja ja tarpeen vaatiessa lain asettamia vaatimuksia.

Säilytä tämä käyttöohje tulevaa tarvetta varten.

Varning!
Produkten får endast installeras och underhållas av utbildad och behörig personal, som följer denna bruksanvisning och eventuella tillämpliga normer och lagföreskrifter noga i förekommande fall.

Behåll denna användarhandbok som referens

Advarsel!
Dette produktet må bare installeres og vedlikeholdes av kompetent og autorisert personale, i streng overholdelse av disse betjeningsanvisningene, alle relevante standarder og rettslige krav der det passer.

Ta vare på denne brukerveiledningen for senere bruk

Advarsel!
Dette produkt må kun installeres og vedligeholdes af autoriseret personale, under nøje overholdelse af disse driftsinstruktioner, relevante standarder og lovgivningsmæssige krav, hvor dette er aktuelt.

Gem denne vejledning til senere reference.

Προειδοποίηση!
Η εγκατάσταση και συντήρηση αυτού του προϊόντος πρέπει να γίνεται μόνο από κατάλληλα εκπαιδευμένο και εξουσιοδοτημένο προσωπικό, με αυστηρή τήρηση των οδηγιών χειρισμού, των εφαρμοζόμενων προτύπων και των νομικών απαιτήσεων όπου απαιτείται.

Φυλάξτε αυτό το εγχειρίδιο χρήσης για μελλοντική αναφορά

Advertencia
La instalación y mantenimiento de este producto debe ser efectuada únicamente por personal competente y autorizado, respetándose de forma estricta estas instrucciones de funcionamiento, así como cualquier norma y requerimiento legal que sean aplicables.

Conserve esta guía del usuario para poder consultarla en el futuro.

Advertência!
A instalação e a manutenção deste produto só deve ser realizada por pessoal autorizado e competente, sob estrita observância destas instruções de utilização e de quaisquer normas e requisitos legais relevantes, quando adequado.

Conserve este guia do utilizador para referência futura

PRELIMINARY
Subject to Revision

AC010 - AC030

MT

Rakkomandazzjonijiet ghall-Installazzjoni

Nirrakkomandaw li l-arja kompressata tiġi trattata qabel ma tidħol fis-sistema ta' distribuzzjoni kif ukoll fil-punti ċ l-applikazzjonijiet kritiċi ta' l-użu.

L-installazzjoni ta' tagħmir li jnixxef l-arja kumpressata fuq sistema li kienet imxarrba jista' jirriżulta f'aktar taghbija ta' ħmieġ ghall-filtri li jintużaw f'punt wieħed, ghall-perjodu sakemm is-sistema ta' distribuzzjoni tinxef. L-elementi tal-filtri jista' jkollhom bżonn li jinbidlu aktar spiss matul dan il-perjodu.

Ghal installazzjonijiet fejn jintużaw kumpressuri mingħajr żejt, xorta jkun hemm preżenti ajrusols u partijiet ta' l-ilma, ghalhekk xorta ghandhom jintużaw gradi bi skop ġenerali u b'effiċċjenza kbira.

Filtru ghal skopijiet ġenerali ghandu dejjem jiġi installat biex jipproteġi l-filtru ta' effiċjenza kbira mill-volum kbir ta' ajrusols likwidi u partijiet solidi.

Installa tagħmir ta' purifikazzjoni fl-aktar temperatura baxxa possibbli imma b'mod li ma jkunx hemm iffriżar, preferibbilment aktar 'l isfel mill-aftercoolers u mir-riċevituri ta' l-arja.

Tagħmir tal-purifikazzjoni fil-punt ta' l-użu ghandu jiġi installat kemm jista' jkun qrib tal-post fejn ghandu japplika.

It-tagħmir ta' purifikazzjoni m'ghandux jiġi installat aktar 'l isfel mill-valvs li jifthu malajr u ghandu jkun protett minn possibilità ta' fluss b'lura jew kundizzjonijiet ohra stressanti.

Naddaf il-pajps kollha li jwasslu ghat-tagħmir ta' purifikazzjoni qabel tinstalla u l-papjs kollha wara li tinstalla t-tagħmir ta' purifikazzjoni u qabel ma tqabbad ma' l-applikazzjoni finali.

Jekk tiffittja linji ta' by-pass madwar it-tagħmir ta' purifikazzjoni, kun żgur li hemm biżżejjed filtrazzjoni ffittjata mal-linja tal-by-pass biex ma thallix li jkun hemm kontaminazzjoni tas-sistema aktar 'l isfel.

Ipprovdi faċilità biex tiddrejnja l-likwidi li jinġabru mit-tagħmir tal-purifikazzjoni. Il-likwidi li jinġabru ghandhom jiġu trattati u mormija b'mod risponsabbli.

Iż-żmien kemm idumu jservu l-elementi tal-filtru li jneħħi l-fwar taż-żjut huwa affettwat mill-koncentrazzjoni taż-żejt tad-dhul, l-umdità relattiva u t-temperatura tas-sistema ta' l-arja kumpressata. L-elementi li jneħħu l-fwar taż-żjut ikollhom bżonn jinbidlu aktar ta' sikwit mill-element shih ekwivalenti.

Mudelli AC010□□□I - AC030□□□I huma ffittjati b'indikatur tal-volum taż-żejt. Kemm l-elementi tal-filtru kif ukoll l-indikatur ghandhom jinbidlu jekk l-indikatur isir ta' kulur blu.

Jekk Jogħġbok Innota - Dan hu indikatur tal-volum taż-żejt u ma jindikax iż-żmien li jdum iservi l-element tal-filtru.

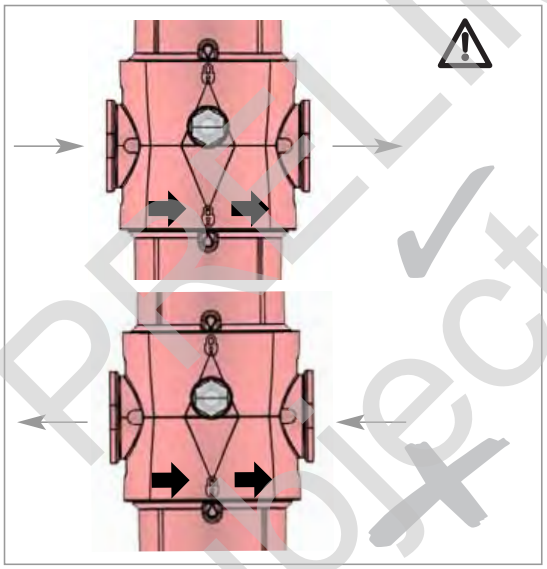

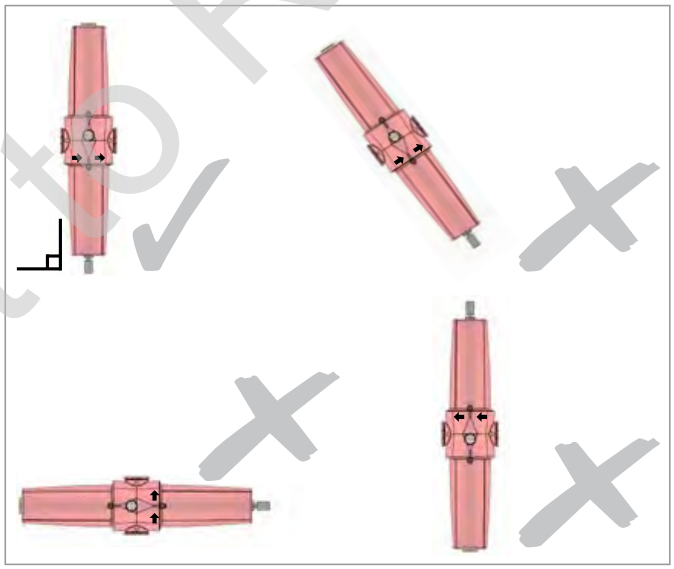

PRELIMINARY Subject to Revision

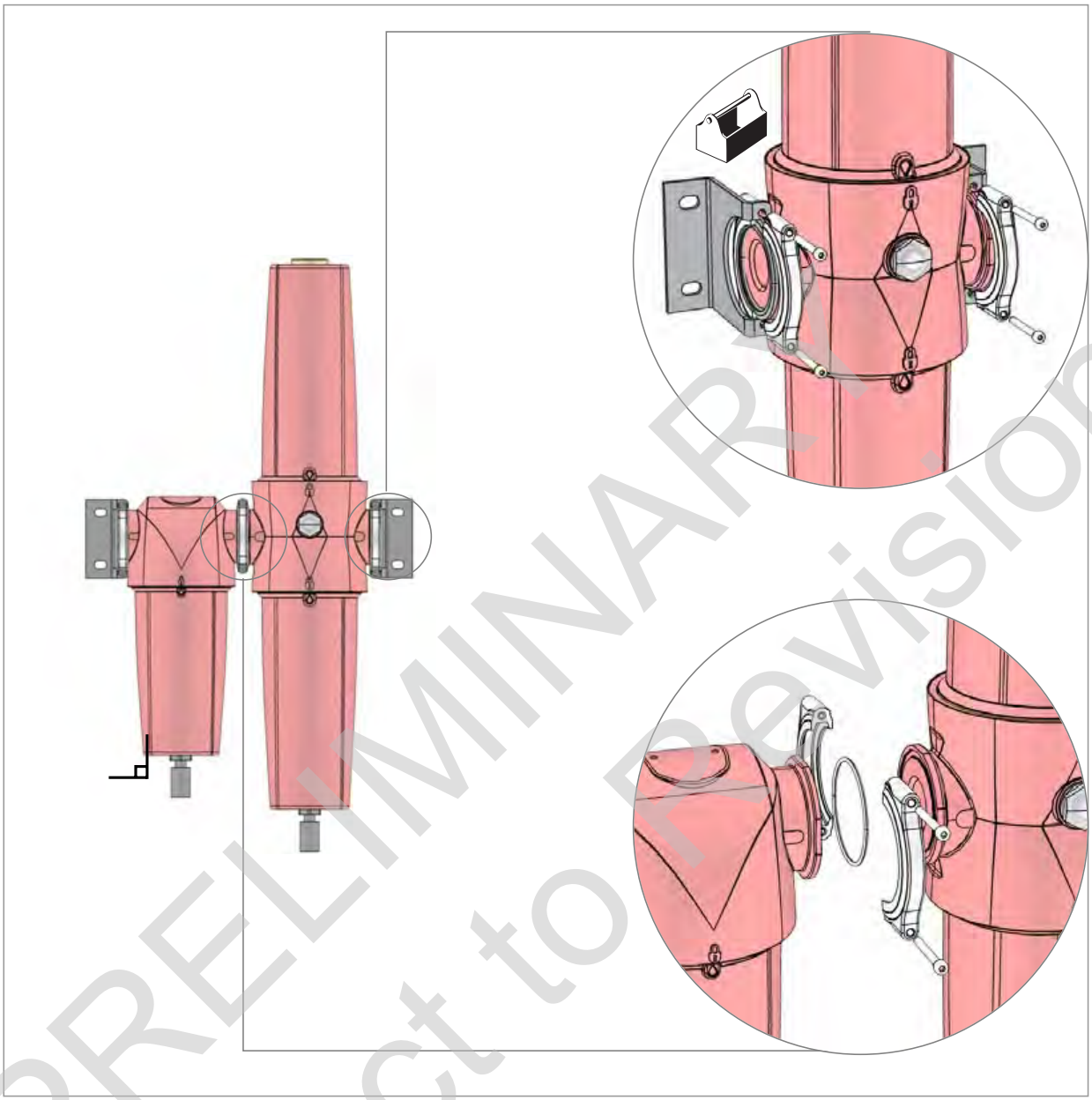

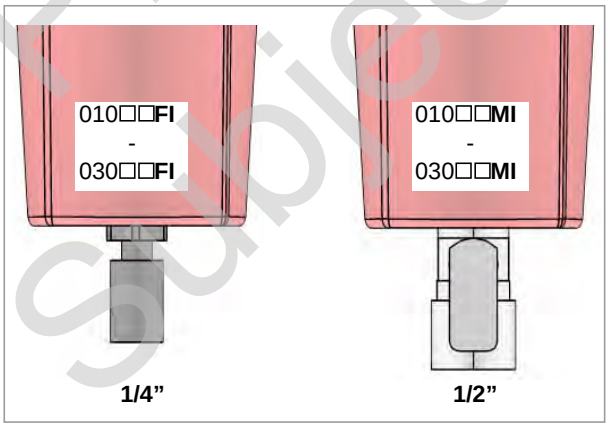

6 FILTER-DH-OIL-XEVOLUTION 01

PRELIMINARY
Subject to Revision

5. Spare Parts (Service Kits)

Reserve-onderdelen (servicekits) • Ersatzteile (Service-Kits) • **Pièces de rechange (nécessaires d'entretien)** • Varaosat (Huoltopakkaukset) • **Reservdelar (servicesatser)** • Reservedeler (service-sett) • **Reservedele (Servicekit)** • Ανταλλακτικά (Πακέτα τεχνικής υποστήριξης) • **Piezas de repuesto (kits de mantenimiento)** • Peças Sobressalentes (Kit de Reparação) • **Ricambi (kit per l'assistenza)** • Części zamienne (zestawy serwisowe) • Náhradné diely (Servisná súprava) • Náhradní díly (Sady pro údržbu) • Varuosad (hooldekomplektid) • Pótalkatrészek (szervizkészletek) • Rezerves daļas (apkopes komplekti) • Atsarginės dalys (priežiros detalių komplektai) • Запасные части (ЗИП) • Nadomestni deli (servisni kompleti) • **Yedek parça (Servis kitleri)** • Partijiet Ghat-Tibdil (Kitts tas-Servizz)

EF1

- **AUTOMATIC DRAIN**
- **AUTOMATISCHER ABLAUF**
- **VIDANGE AUTOMATIQUE**
- **AUTOMISCHAFTAPPEN**
- **DRENAJE AUTOMATICO**
- **SCARIO AUTOMATICO**
- **AUTOMATISK AFLØB**
- **DRENO AUTOMÁTICO**
- ΑΥΤΟΜΑΤΗ ΑΠΟΣΤΡΑΓΓΙΣΗ
- **AUTOMATDRÄNERING**
- **AUTOMAATTINEN**
- **TYHJENNYSKAPPALE**
- DREN AUTOMATYCZNY
- AUTOMATICKÉ VYSUŠENIE
- AUTOMATICKÉ VYPOUŠTĚNÍ
- AUTOMAATNE VÄLJALASE
- AUTOMATIKUS LEERESZTÉS
- AUTOMĀTISKA IZTECINĀŠANA
- AUTOMATINIS IŠLEIDIMAS
- АВТОМАТИЧЕСКИЙ ДРЕНАЖ
- SAMODEJNI ODTOK
- **OTOMATİK SÜZDÜRÜCÜ**
- **DREJN AWTOMATIKU**

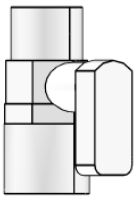

EM1

- **MANUAL DRAIN**
- **MANUELLER ABLAUF**
- **VIDANGE MANUELLE**
- **MANUEEL AFTAPPEN**
- **DRENAJE MANUAL**
- **SCARIO MANUALE**
- **MANUELT AFLØB**
- **DRENO MANUAL**
- ΧΕΙΡΟΚΙΝΗΤΗ ΑΠΟΣΤΡΑΓΓΙΣΗ
- **MANUELL DRÄNERING**
- **KÄSIKÄYTTÖINEN**
- **TYHJENNYSKAPPALE**
- DREN RĘCZNY
- RUČNÉ VYSUŠENIE
- RUČNÍ VYPOUŠTĚNÍ
- KÄSITSI VÄLJALASE
- KÉZI LEERESZTÉS
- MANUĀLA IZTECINĀŠANA
- RANKINIS IŠLEIDIMAS
- ДРЕНАЖ ВРУЧНУЮ
- ROČNI ODTOK
- **ELLE KULLANILACAK SÜZDÜRÜCÜ**
- **DREJN MANWALI**

	AA	AC / AC
010 A		
010 B	010AA	010AC
010 C		
015 B	015AA	015AC
015 C		
020 C		
020 D	020AA	020AC
020 E		
025 D	025AA	025DAC
025 E	025AA	025EAC
030 E		
030 F	030AA	030AC
030 G		

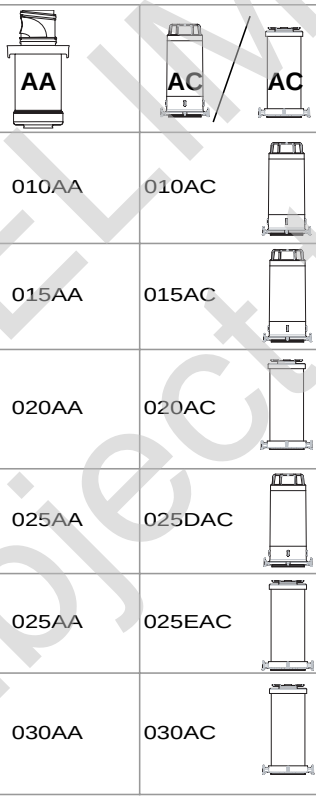

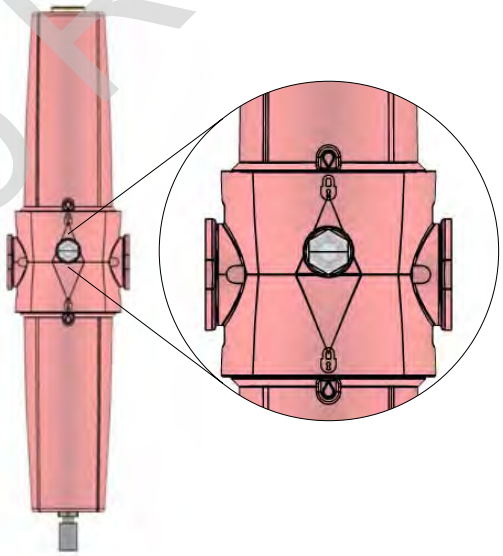

BOIE1
AC010 □□□ I - AC030 □□□ I

PRELIMINARY
Subject to Revision

AC010 - AC030

6. Maintenance

Onderhoud • Wartung • **Entretien** • Kunnossapito • **Underhåll** • Vedlikehold • **Vedligeholdelse** • Συντήρηση • **Mantenimiento** • Manutenção • **Manutenzione** • Konserwacja • Údržba • Údržba • Hooldus • Karbantartás • Tehniskā apkope • Techninė priežiūra • Обслуживание • Vzdrževanja • **Bakım** • **Manutenzjoni**

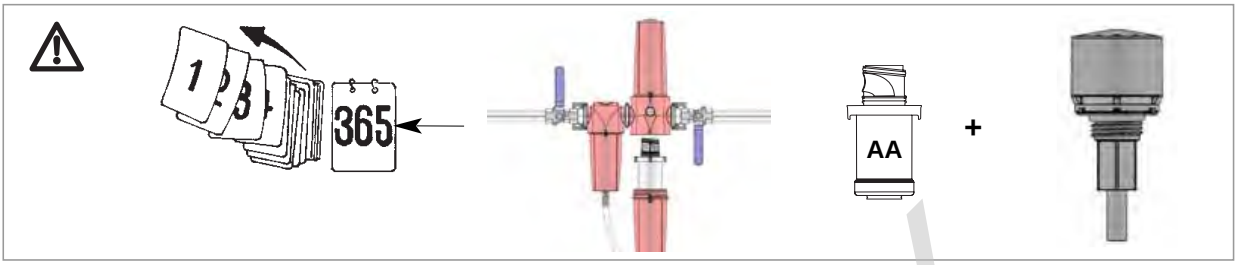

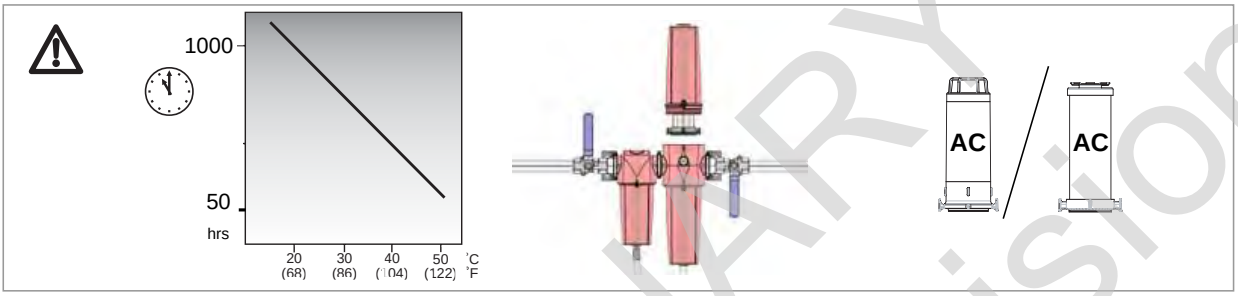

Models AC010□□□I - AC030□□□I are fitted with a bulk oil indicator. Both filter elements and indicator should be changed if indicator is blue in colour.

Please Note - This is a bulk oil indicator, it does not indicate filter element life.

Modellen AC010□□□I - AC030□□□I zijn uitgerust met een bulk olie indicator. Zowel de filterelementen als de indicator moeten vervangen worden als de indicator blauw van kleur is.

N.B. - Dit is een bulk olie indicator, het is geen indicator voor de levensduur van het filterelement.

Die Modelle AC010□□□I - AC030□□□I sind mit einer Ölanzeige ausgestattet. Sowohl die Filterelemente also auch die Anzeige sollte ausgetauscht werden, wenn sich die Anzeige blau färbt.

Bitte beachten - Es handelt sich hier um eine Ölanzeige. Diese gibt keinen Hinweis auf die Lebensdauer des Filterelements.

Les modèles AC010□□□I - AC030□□□I sont fournis avec un indicateur de présence massive d'huile. Lorsque l'indicateur est bleu, il est nécessaire de remplacer les cartouches et l'indicateur.

Remarque : Il s'agit d'un indicateur de présence massive d'huile, et non pas de la durée de vie des cartouches.

Malleissa AC010□□□I – AC030□□□I on öljynilmaisin. Sekä suodatinelementit että ilmaisin on vaihdettava, jos ilmaisin on sininen.

Huomautus – Tämä on öljynilmaisin. Se ei ilmaise suodatinelementin ikää.

Modell AC010□□□I - AC030□□□I har en indikator för större mängder olja. Både filterelement och indikator ska bytas om indikatorn har blå färg.

Observera –- indikatorn visar oljeförekomst, den indikerar inte filterelementets livslängd.

Modell AC010□□□I - AC030□□□I er montert med bulkvolum oljeindikator. Både filterelementer og indikator skal skiftes når indikatoren er blå.

Merk – **Dette er en bulkvolum oljeindikator, den indikerer ikke filterelementets levetid.**

Modell AC010□□□I - AC030□□□I har en indikator för större mängder olja. Både filterelement och indikator ska bytas om indikatorn har blå färg.

Observera –- indikatorn visar oljeförekomst, den indikerar inte filterelementets livslängd.

Τα μοντέλα AC010□□□I - AC030□□□I διαθέτουν ένα δείκτη παρουσίας λαδιού. Όταν ο δείκτης είναι μπλε πρέπει να αλλάζονται τόσο τα φίλτρα όσο και οι δείκτες.

Παρακαλούμε σημειώστε ότι - Αυτός είναι ένας δείκτης παρουσίας λαδιού, δεν υποδεικνύει τη διάρκεια ζωής του φίλτρου.

Los modelos AC010□□□I - AC030□□□I disponen de un indicador de presencia de aceite. Si el indicador se vuelve azul deben cambiarse tanto los elementos filtrantes como el indicador.

Nota importante: se trata de un indicador de presencia de aceite. No indica la vida del elemento filtrante.

Modelos AC010□□□I - AC030□□□I são instalados com um indicador do óleo em bruto. Ambos os elementos do filtro e o indicador deverão ser mudados se o indicador estiver azul.

Nota - Este é um indicador do óleo em bruto, não indica a vida útil do elemento do filtro.

I modelli AC010□□□I - AC030□□□I sono provvisti di un indicatore degli oli misti. Sostituire gli elementi filtranti e l'indicatore quando il secondo assume una colorazione blu.

Nota - L'indicatore segnala la presenza di oli misti, ma non la durata dell'elemento filtrante.

8 FILTER-DH-OIL-XEVOLUTION 01

PRELIMINARY
Subject to Revision

1

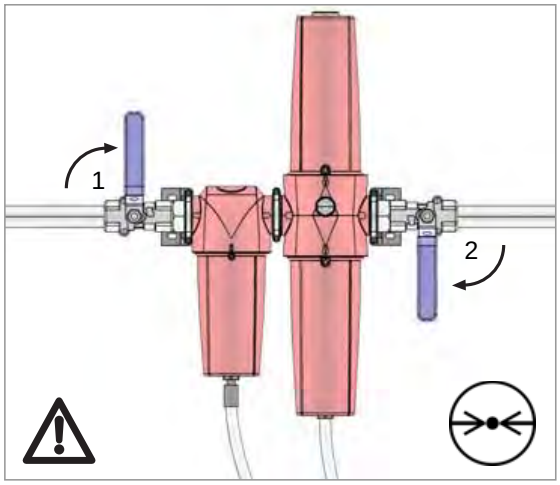

2

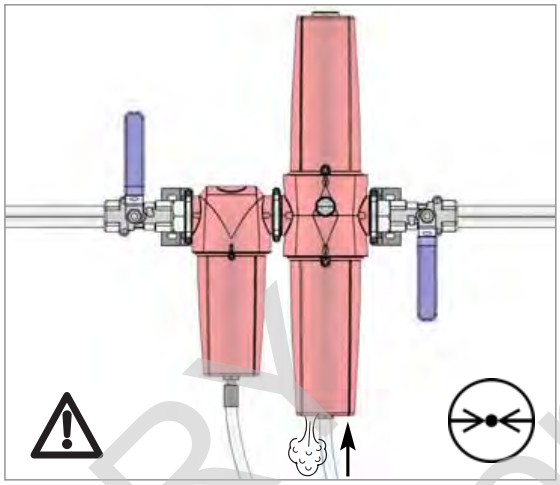

3

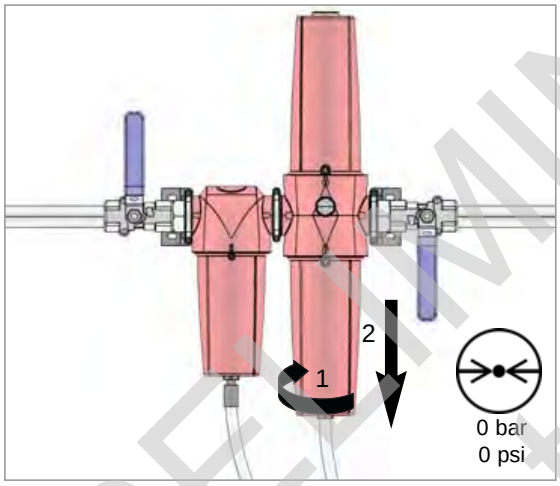

4

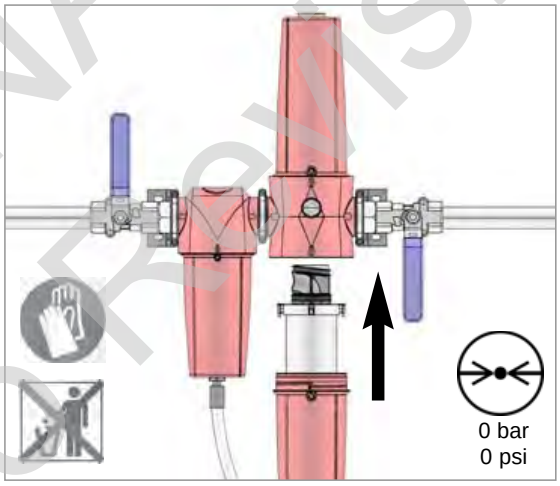

5

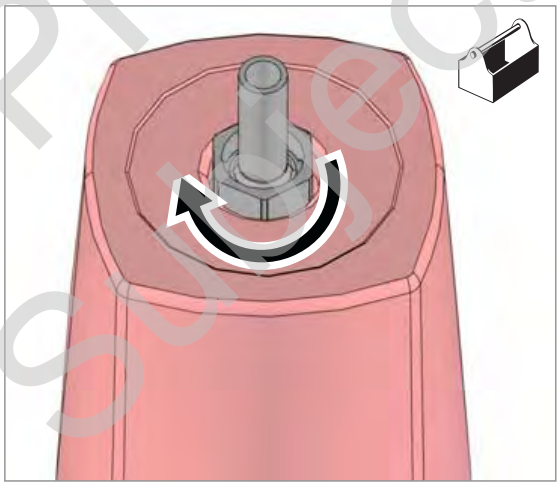

6

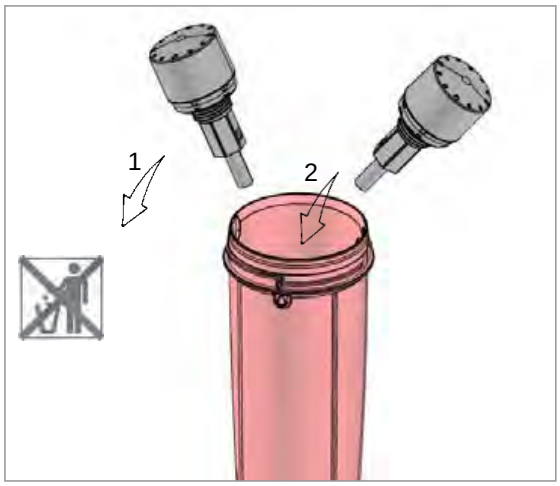

9 FILTER-DH-OIL-XEVOLUTION 01

PRELIMINARY
Subject to Revision

7

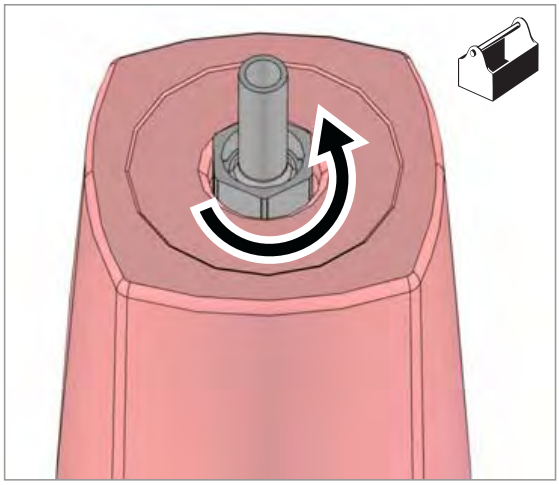

8

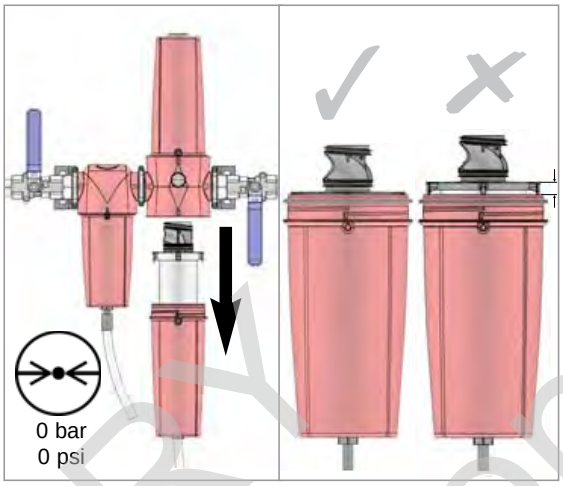

9

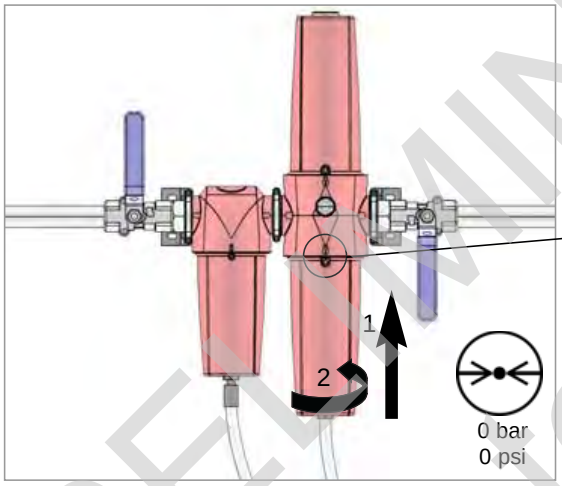

10

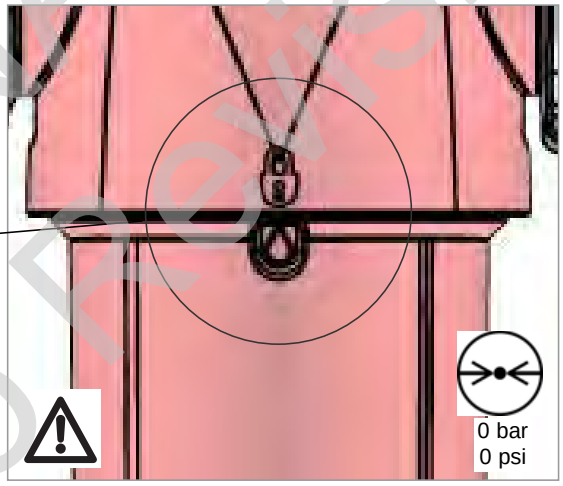

11

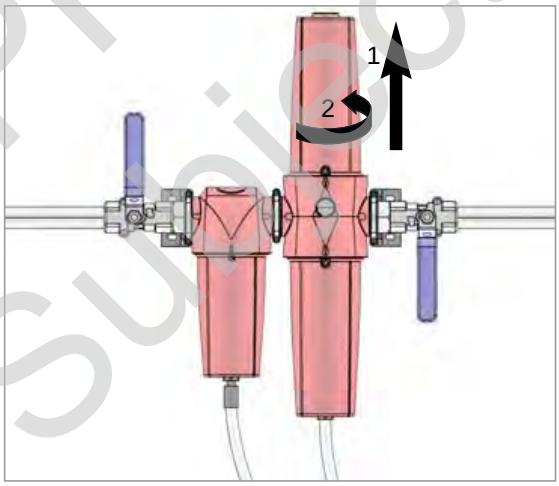

12

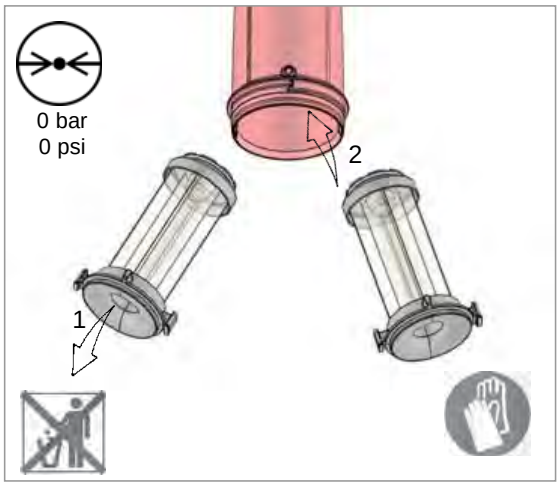

10 FILTER-DH-OIL-XEVOLUTION 01

PRELIMINARY
Subject to Revision

13

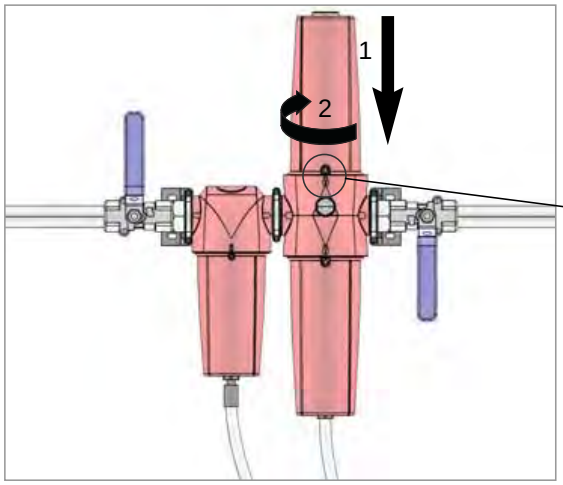

14

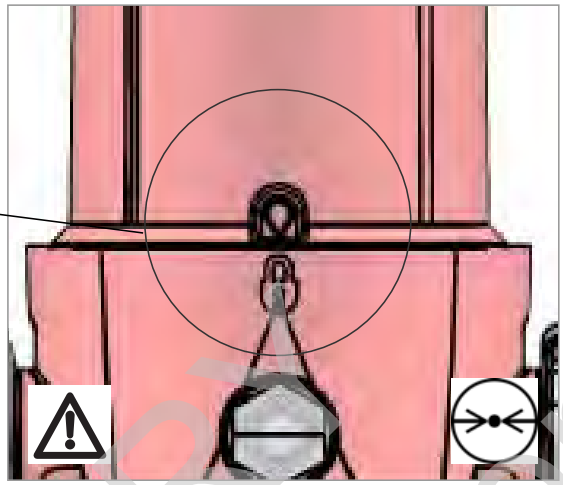

15

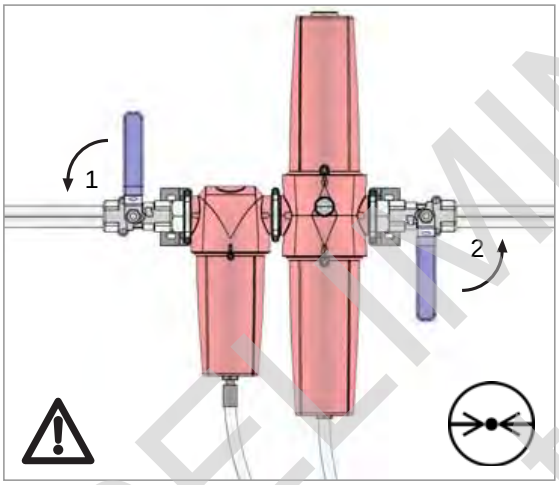

PRELIMINARY
Subject to Revision

Declaration of Conformity — EN

domnick hunter
Dukesway, TVTE, Gateshead, Tyne & Wear, NE11 0PZ. UK

AC010, 015, 020 025, 030

Directives	97/23/EC,
Standards used	Generally in accordance with ASMEVIII Div 1 : 2004.
PED Assesment Route :	Article 3.3 (AC 010, 015, 020, 025) Module A (AC 030)
Notified body for PED:	N/A
EC Type-examination Certificate:	N/A
Authorised Representative	Barry Wade Business Systems Improvement Manager domnick hunter ltd

Declaration

I declare that as the authorised representative, the above information in relation to the supply / manufacture of this product, is in conformity with the standards and other related documents following the provisions of the above Directives.

Signature: **Date:** 28 / 09 / 05

Declaration Number: 0001/280905

Verklaring van Conformiteit — NL

domnick hunter
Dukesway, TVTE, Gateshead, Tyne & Wear, NE11 0PZ. GB

AC010, 015, 020 025, 030

Richtlijnen	97/23/EC,
Gehanteerde normen	Gewoonlijk volgens ASMEVIII Div 1 : 2004.
PED-beoordelingstraject:	Artikel 3.3 (AC 010, 015, 020, 025) Module A (AC 030)
Aangemelde instantie voor PED:	N/A
EC Type onderzoekscertificaat:	N/A
Bevoegde vertegenwoordiger	Barry Wade Manager Bedrijfssysteemverbetering domnick hunter ltd

Verklaring

Als bevoegde vertegenwoordiger verklaar ik dat bovenstaande informatie met betrekking tot de levering / vervaardiging van dit product overeenstemt met de normen en andere bijbehorende documentatie volgens de bepalingen van bovengenoemde richtlijnen.

Handtekening: **Datum:** 28 / 09 / 05

Verklaringnummer: 0001/280905

Konformitätserklärung — DE

domnick hunter
Dukesway, TVTE, Gateshead, Tyne & Wear NE11 0PZ GROSSBRITANNIEN

AC010, 015, 020 025, 030

Richtlinien	97/23/EC,
Angewandte Normen	Allgemein in Übereinstimmung mit ASMEVIII Div 1 : 2004.
Beurteilungsroute der Druckgeräterichtlinie:	Artikel 3.3 (AC 010, 015, 020, 025) Modul A (AC030)
Benannte Stelle für die Druckgeräterichtlinie:	N/A
EG-Baumusterprüfbescheinigung:	N/A
Bevollmächtigter Vertreter	Barry Wade Business Systems Improvement Manager domnick hunter ltd

Erklärung

Hiermit erkläre ich als bevollmächtigter Vertreter die Konformität der oben aufgeführten Informationen in Bezug auf die Lieferung/Herstellung dieses Produkts mit den Normen und anderen zugehörigen Dokumenten gemäß den Bestimmungen der oben genannten Richtlinien.

Unterschrift: **Datum:** 28 / 09 / 05

Nummer der Erklärung: 0001/280905

Déclaration de conformité — FR

domnick hunter
Dukesway, TVTE, Gateshead, Tyne & Wear, NE11 0PZ GB

AC010, 015, 020 025, 030

Directives	97/23/EC,
Normes utilisées	Généralement conforme à ASMEVIII div. 1 : 2004.
Méthode d'évaluation de la directive d'équipements de pression :	Article 3.3 (AC010, 015, 020, 025, 030) Module A (AC030)
Organisme de notification pour la directive d'équipement sous pression :	N/A
Certificat d'examen de type CE :	N/A
Représentant agréé	Barry Wade Business Systems Improvement Manager domnick hunter ltd

Déclaration

Je déclare à titre de représentant agréé que les informations ci-dessus liées à la fourniture/fabrication de ce produit sont en conformité avec les normes et autres documents liés déclarés selon les dispositions des directives susmentionnées.

Signature : **Date :** 28 / 09 / 05

N° de déclaration : 0001/280905

Vaatimustenmukaisuusvakuutus — FI

domnick hunter
Dukesway, TVTE, Gateshead, Tyne & Wear NE11 0PZ ISO-BRITANNIA

AC010, 015, 020 025, 030

Direktiivit	97/23/EC,
Käytetyt standardit	Yleensä seuraavan standardin mukaisesti: ASMEVIII Div 1: 2004.
PED-arviointimenettely:	Artikla 3.3 (AC010, 015, 020, 025, 030) Moduuli A (AC030)
PED-säännösten ilmoitettu laitos:	N/A
EY-tyyppihyväksynnän sertifikaatti:	N/A
Valtuutettu edustaja	Barry Wade Yritysjärjestelmien kehityspäällikkö domnick hunter ltd

Vakuutus

Valtuutettuna edustajana vakuutan, että yllä olevat tiedot, jotka liittyvät tämän tuotteen toimittamiseen tai valmistamiseen, ovat standardien ja muiden asiaan liittyvien asiakirjojen mukaisia ja noudattavat yllä mainittuja direktiivejä.

Allekirjoitus: **Päiväys:** 28 / 09 / 05

Vakuutuksen numero: 0001 /280905

Försäkran om överensstämmelse — SV

domnick hunter
Dukesway, TVTE, Gateshead, Tyne & Wear, NE11 0PZ, Storbritannien

AC010, 015, 020 025, 030

Direktiv	97/23/EC,
Använda standarder	Generellt i enlighet med ASMEVIII Div 1: 2004.
Fastställningsväg för PED:	Artikel 3.3 (AC010, 015, 020, 025, 030) Modul A (AC030)
Anmält organ för PED:	N/A
EG-intyg om typprovning:	N/A
Auktoriserad representant	Barry Wade Business Systems Improvement Manager domnick hunter ltd

Försäkran

Jag försäkrar, i egenskap av auktoriserad representant, att ovannämnda information avseende leverans/tillverkning av denna produkt överensstämmer med standarder och övriga relaterade dokument enligt villkoren i ovanstående direktiv.

Underskrift: **Datum:** 28 / 09 / 05

Försäkran nummer: 0001/280905

PRELIMINARY
subject to Revision

13.9 Oil-injected MOBILAIR service intervals

Maintenance strategy 000510 (1x service per year):

Package sequence	A	B	A	B	A	C	from the beginning
Years	1	2	3	4	5	6	

Tab. 96 Service maintenance package - (1x service per year)

Change intervals apply to favourable ambient conditions, such as good fuel quality, cool to medium ambient temperatures, low humidity and low to medium dust exposure.

PRELIMINARY
Subject to Revision

Tab. 97 Service intervals for MOBILAIR parts, Filter SET group (compressor and engine)

Group	Item Parts list	Change intervals and maintenance packages					Note
Part (with mounting location)		A 1 year	B 2 years	C 6 years	Years max.	Operating hours max.	
Filter SET (compressor and engine):	550	X	X	X	1		The composition of the sets may vary depending on the machine type.
Compressor oil filter	1210						
Engine oil filter	1905						
Intake air filter, compressor	1260						
Intake air filter, engine	1280						
Fuel prefilter	1910, 1915						
Fuel filter	1920						
Water separator filter element	1985						

PRELIMINARY
Subject to Revision

Compressor group Part (with mounting location)	Item Parts list	Change intervals and maintenance packages					Note
		A 1 year	B 2 years	C 6 years	Years max.	Operating hours max.	
Cooling oil	1600, 1601	X	X	X	1	1000	
Compressor oil filter	1210	X	X	X	1	1000	
Intake air filter, compressor	1260	X	X	X	1	1000	
Oil separator cartridge	1450		X	X	2	2000	
Drive belt, fan wheel, cooler	1801		X	X	2	2000	
Generator belt	9125		X	X	2	2000	
Service kit for dirt trap	9416	X			1		in extraction line for oil separator tank *Option da:* to compressed air aftercooler
Service kit, dirt trap, control valve	2148	X	X	X	1		
Service kit for dirt trap	9420	X	X	X	1		*Option da:* to compressed air aftercooler
Compressed air pre-filter filter element	1550	X	X	X	1	500	*Option dd*
Compressed air micro-filter element	1551	X	X	X	1	500	*Option dd*
Pre-/micro-filter element seal	1548	X	X	X	1	500	*Option dd*
Fresh-air filter element set	1549	X	X	X	1	500	*Option dc*
Fresh air extraction line	9439, 9440			X	6		*Option dc*
Insert for condensate drain	9475	X	X	X	1	1000	*Option dd*
Service kit for condensate drain compressed air filter	9601	X	X	X	1	500	*Option dd*

PRELIMINARY
Subject to Revision

Compressor group	Item	Change intervals and maintenance packages					Note
Part (with mounting location)	Parts list	A 1 year	B 2 years	C 6 years	Years max.	Operating hours max.	
Pressure hoses - oil, compressed air, condensate and control air	7110, 7120, 7130, 7140, 7160, 7170, 7172, 7180, 7190, 7195, 7200, 7205, 7230, 7250, 7360, 7560 – 7566, 7580, 7590, 9450, 9485,9886			X	6		The type and quantity depends on the machine model.

Tab. 98 Service intervals for MOBILAIR parts, compressor group

PRELIMINARY Subject to Revision

Group	Item	Change intervals and maintenance packages					Note
Part (with mounting location)	Parts list	A 1 year	B 2 years	C 6 years	Years max.	Operating hours max.	
Engine filter SET:	551	X					The composition of the sets may vary depending on the machine type.
Engine oil filter	1905						
Fuel prefilter	1910, 1915						
Fuel filter	1920						
Water separator filter element	1985						

Tab. 99 Service intervals for MOBILAIR parts, Filter SET group Engine

PRELIMINARY
Subject to Revision

Engine group Part (with mounting location)	Item Parts list	Change intervals and maintenance packages A 1 year	B 2 years	C 6 years	Years max.	Operating hours max.	Note
Engine oil	1925	X					
Engine oil filter	1905	X	X	X	1	500	
Intake air filter, engine	1280	X	X	X	1	500/1000	
Fuel prefilter	1910; 1915 – 1919	X	X	X	1	500/1000	The type and quantity depends on the machine model.
Fuel filter	1920	X	X	X	1	500/1000	The type and quantity depends on the machine model.
Water separator filter element	1985	X	X	X	1	500	in fuel supply line
Engine coolant	5195		X	X	3; 6	2000; 12000	Glysantin; CAT ELC
Engine coolant addition	5197		X	X	2; 3		SCA additive; CAT ELC refresher
Engine drive belt (for engine fan and engine units)	1800, 4470	X	X	X	1	500/1000	The type and quantity depends on the machine model.
			X	X	2	2000	
			X	X		3000	
Crankcase ventilation filter element	1216	X	X	X	1	1000	Oil separator element
Air filter element	1250	X	X	X	1	1000	M235 Add-on filter, tank venting
Fuel return line	7975		X	X	2		
Fuel hoses	5193, 7960 - 7962, 9350			X	6		The type and quantity depends on the machine model.

PRELIMINARY
subject to Revision

Engine group	Item	Change intervals and maintenance packages					Note
Part (with mounting location)	Parts list	A 1 year	B 2 years	C 6 years	Years max.	Operating hours max.	
Pressure hoses - coolant , charge air and oil	4511 - 4513, 5620 5621, 5664 - 5667, 5670 – 5672, 7100, 7120, 7400, 7402, 7404, 7500, 7502, 7504, 7510, 7600, 7907			X	6		The type and quantity depends on the machine model.

Tab. 100 Service intervals for MOBILAIR parts, Engine group

PRELIMINARY Subject to Revision